Top cover assembly

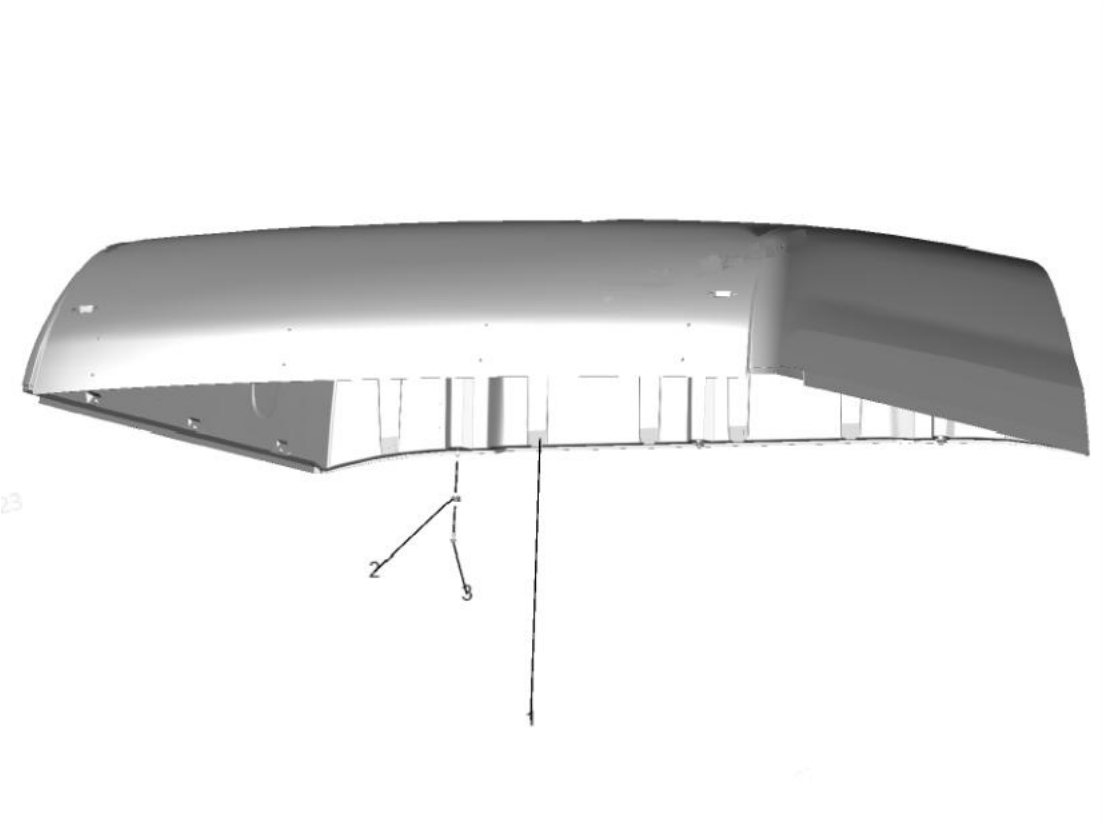

1. Top cover assembly 2. Cushion block 3. Drag link 4. Hexagon flange bolt

Remove the top cover assembly



Removal steps

1. Remove the adhesiveetween the top cover assembly and the body with an adhesive removal tool.
2. Remove the thirteen M8*20 hexagon flange bolts ② with a 13mm socket wrench.
3. Take out the top cover assembly ③ with the top cover fixture.

Install the top cover assembly



Installation steps

1. Apply adhesive ⑴ along the upper edge of the cab body with a glue gun.
2. Use a guide pin ④ on the left and right sides of the front respectively, and install the top cover assembly ③ to the upper part of the body with a top cover fixture.
3. Take out the guide pin ④, and use a 13mm socket wrench to tighten the thirteen M8*20 hexagon flange assembling bolts ② to 14 ±1.4Nm.

Front wall module assembly

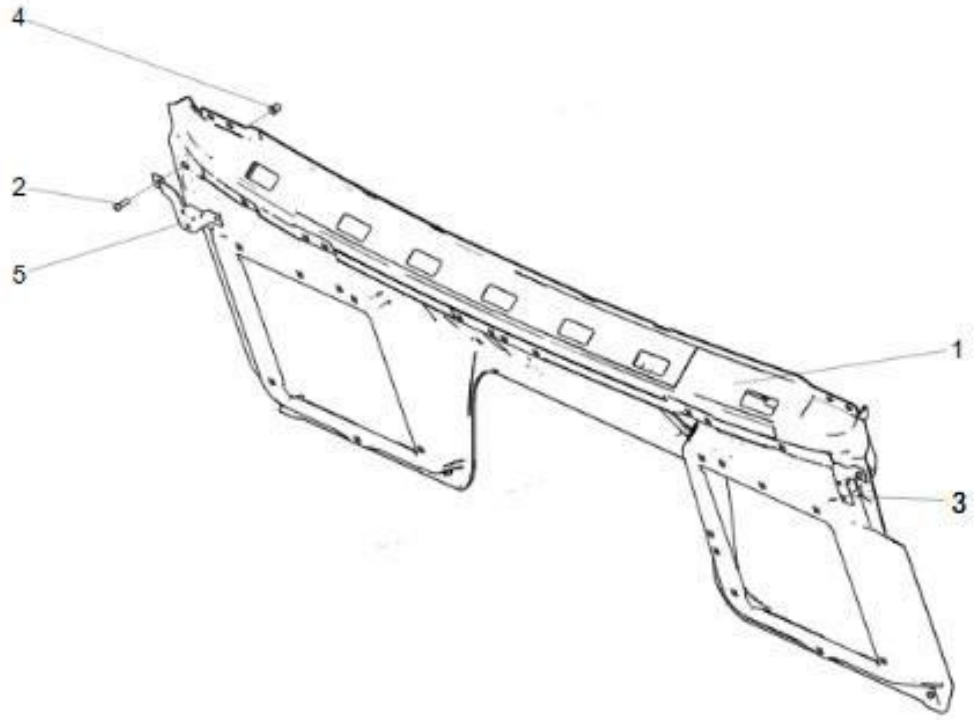

1. Front wall module mounting base plate assembly 2. Hexagon socket head cap screw
3. Left bracket assembly 4. Blind rivet nut 5. Right bracket assembly

Remove front wall module sub-assembly



Removal steps

1. Support the front wall module sub-assembly ③ with the dashboard snatch.
2. Remove the eight M8*25 hexagon socket head cap screws ① with a T40 socket.
3. Remove the adhesive ② between the front wall module sub-assembly ③ and the cab body with the adhesive removal tool, and remove the front wall module sub-assembly ③.

Install the front wall module sub-assembly



Installation steps

1. Apply adhesive ② to the mounting position of the cab body front wall module with a glue gun.
2. Support the front wall module sub-assembly ③ with the dashboard grab lifter and push it to the mounting position.
3. Tighten the front wall module sub-assembly to the cab body with eight M8*25 hexagon socket head cap combination screws ① (T40 socket) to 14±1.4Nm.

Cab assembly

Preparation before demolition



1. Hang the cab spreader on the cab assembly, hang the rear end on the lifting bracket with a hook, and hang the front end on the upper bracket of the front suspension shock absorber with a stay bar.

2. Rotate the cab lifting electric pump to the lifting state, and use the tilting handle to lift the rear of the cab until the upper bracket of the rear suspension shock absorber is out of the hydraulic lock state.

Remove the front wall line

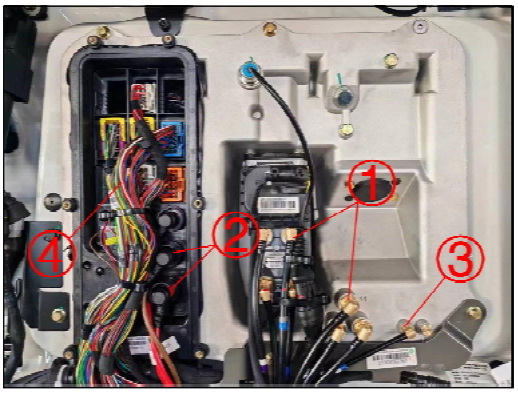

Removal steps

1. Remove the front wall air circuit connector ① with a 19mm open-end wrench.

2. Remove the harness ② with a 13mm socket wrench

3. Remove the seat line connector ③ with a 10mm open-end wrench.

4. Remove the front wall butt harness ④ with a rocker.

Note: When removing the power cord, ensure that the main power switch of the battery box is turned off.

Remove the cab assembly

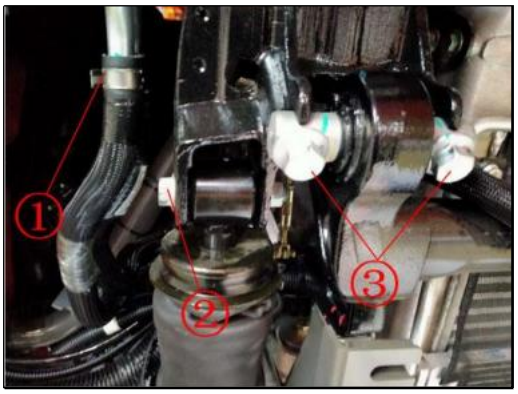

1. Remove the heater pipe hose clamp ① with a 7mm socket wrench.

2. Remove the M14*80 hexagon flange serrated bolt ② on the front suspension shock absorber with a 19mm socket wrench.

3. Use a 21mm socket wrench to remove the M16*55 hexagon flange serrated bolt ③ between the tilting shaft and the shock absorber upper bracket.

4. Lift the cab assembly with the cab sling, take out the lifting cylinder connected to the bottom, turn to the telescopic shaft, take out the cab assembly, and move it to a safe position.

Install the cab assembly



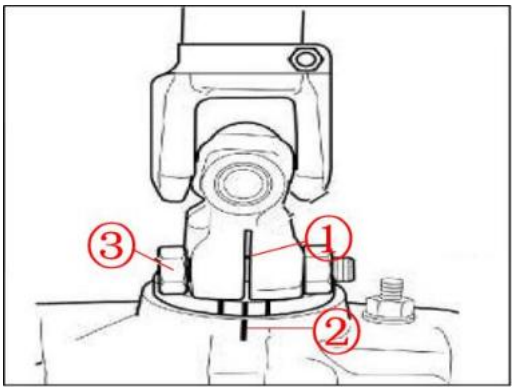

Installation steps

1. Transfer the cab assembly to the lowering area at the front end of the frame with the cab sling.

2. Connect the upper end of the lifting cylinder to the upper bracket side of the lifting cylinder at the bottom of the cab, and use a 21mm socket wrench to tighten the M16*85 hexagon flange bolt to 190±19Nm.

3. Connect the steering column telescopic shaft to the steering gear spline, and use a 16mm socket wrench to tighten the attached M10*55 hexagon head bolt ③ to 60-65Nm.

Note: Apply 2271 threadlocker to the attached M10*55 hexagon head bolt ③ during installation, and align the spider notch ① at the lower end of the telescopic shaft with the upper scale line ② of the steering gear.

Install the cab assembly

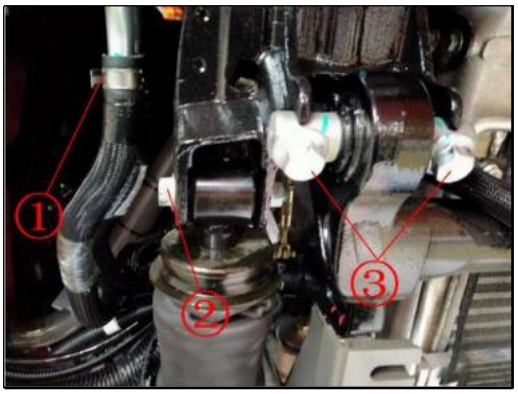

1. Connect the chassis to the cab heater pipe ①, and tighten the hose clamp with a 7mm socket to 5.5±0.3Nm.

2. Install the front suspension shock absorber on the shock absorber upper bracket, and use a 19mm socket wrench to tighten the M14*80 hexagon flange serrated bolt ② to 200±20Nm.

3. Connect the tilting shaft to the front suspension upper bracket, and use a 21mm socket wrench to tighten the M16*50 hexagon flange serrated bolt ③ to 125-198Nm.

Note: Apply 2271 threadlocker to the fixing bolts.

Install the front wall line

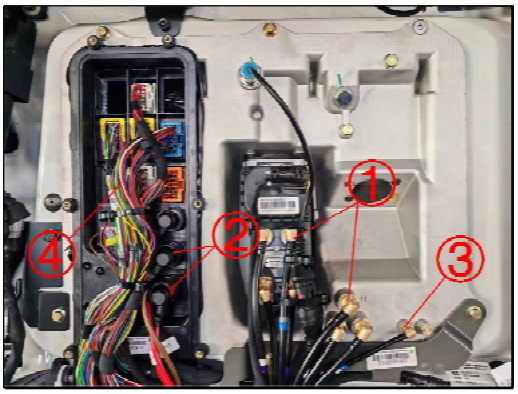

1. Connect the front wall harness connector ④.
2. Connect the cab power cable, and tighten the M8 self-locking nut with a 13mm socket wrench to 20±2Nm.
3. Connect the front wall line.

Note: The blue/gray line connects to port 12 of the foot brake valve, the purple/blue line to port 11 of the foot brake valve, the purple/brown line to port 21 of the foot brake valves, the purple/white line to port 22 of the foot brake valves, the gray/blue line to port 11 of the pedal frame, and the gray/red line to port 21 of the pedal frame. The gray/brown line connects to port 22 of the pedal.

Door interior trim

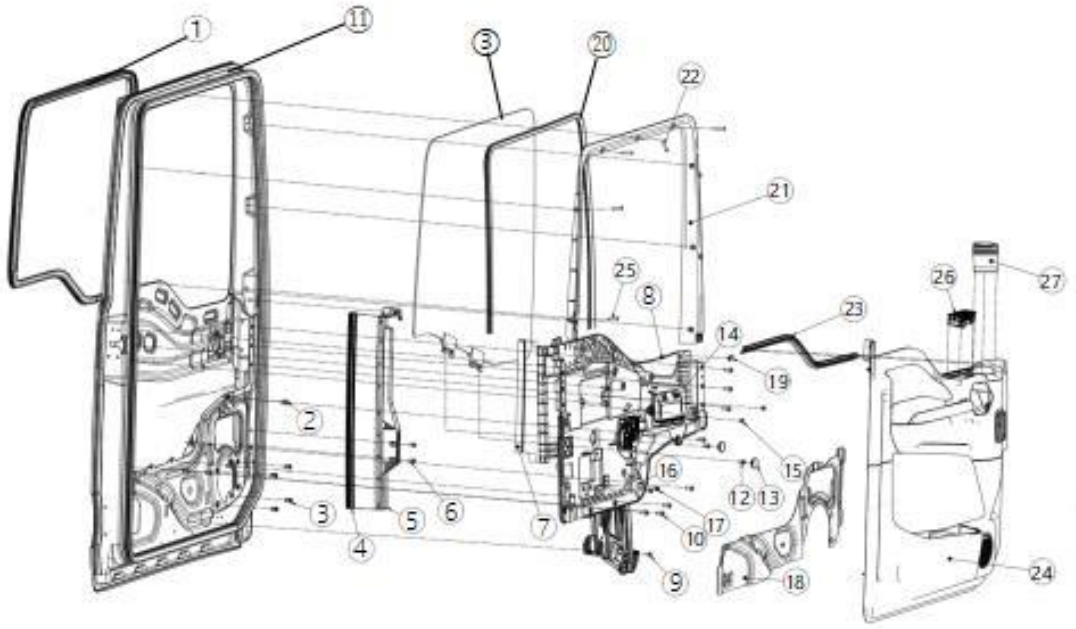

1. Door outer sealing strip 2. Blind rivet nut 3. Plastic nut seat 4. Door glass front guide rail sealing strip 5. Door glass front rail 6. Hexalobular socket pan head screw 7. Door glass rear guide rail sealing strip 8. Electric window regulator 9. Hexagon socket lobular pan head screw 10. Hexagon socket flange bolt 11. Door glass 12. Hexalobular socket pan head screw 13. Regulator mounting plate cap 14. Door controller 15. Cross recessed pan head screw assembly 16. Connector fixing plate 17. Cross recessed pan head screw assembly 18. Foam lining 19. Shaped leaf spring nut 20. Door glass inner sealing strip I 21. Window frame 22. Half-round hexalobular socket pan head tapping screws screw 23. Door glass inner seal strip II 24. Door interior trim panel assembly 25. Half-round hexalobular socket pan head tapping screws screw 26. Door control switch panel 27. Mobile ashtray

Remove the door handle trim panel



Removal steps

1. Remove the door handle trim panel ① with a rocker.

Remove the window regulator switch



1. Take out the window regulator switch ① with a rocker, take out the switch harness and take out the window regulator switch.
2. Take out the movable ashtray assembly ②.

Remove the door interior trim assembly



1. Remove the M4.8*35 oval head hexagon socket tapping screw ① with a T25 insert.
2. Remove the M6*70 hexagon flange bolt ② with an 8mm socket wrench.
3. Remove the interior trim panel cap ④ with a rocker, and remove the M6*20 cross recessed pan head tapping screw with a cross head screwdriver.
4. Remove the door interior trim assembly ③ with a rocker, remove the inside handle wire, remove the door lamp harness, and take out the door interior trim assembly.

Remove the door controller assembly

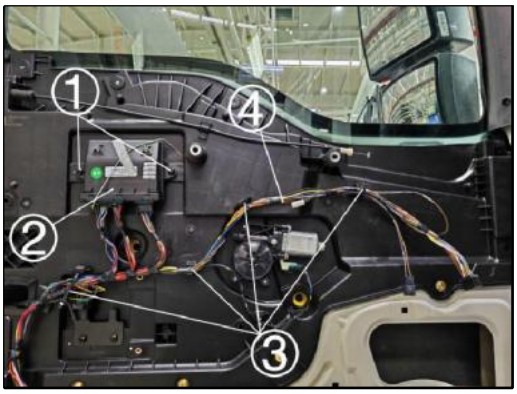

1. Remove the M6*10 cross recessed pan head tapping screw ① with a cross head screwdriver, remove the door control module harness, and take out the door control module ②.

2. Remove the clamping plate strap ③ and take out the door harness ④.

Remove the door glass



1. Remove the M4.8*19 cross recessed pan head tapping screw ① with a cross head screwdriver, and take out the door window ② upward.

Remove the window regulator



1. Remove the eleven M8*20 hexalobular socket flange bolts ① with a T40 Torx bit socket wrench, and take out the window regulator ②.

Remove the door foam lining



1. Remove the door foam lining ② along the bonding track ① with a utility knife.

Remove the door sunshade



1. Remove the M4.2*13 cross recessed pan head tapping screw ① with a cross head screwdriver, and take out the guide rod and guide rod pin ②.
2. Remove the M4.8*35 half-round hexalobular socket pan head tapping screws screw ③ (back of the marked point) with a T25 Torx bit socket, and take out the door sunshade ④.

Remove the window frame



1. Remove the six M4.8*35 half-round hexalobular socket tapping screws ① with a T25 Torx bit socket, and take out the door window frame ②.

Remove the door window outer sealing strip



1. Remove the exterior sealing strip ① at a corner of the door frame.

Remove the glass run rail



1. Remove the M6*20 cross recessed pan head screw ① with a cross head screwdriver, and take out the glass run rail ②.

Install the glass run rail



Installation steps

1. Install the glass run rail ② in the slot of the door body, and use a cross head screwdriver to tighten the M6*20 cross recessed pan head screws to 5±0.5Nm.

Install the door outer sealing strip



1. Clamp the corners of the four door window outer sealing strips ① firmly to the door body, and use a rubber hammer to knock the door window outer sealing strip to ensure that the edge of the door glass outer sealing strip fits tightly with the door body.

Install the window regulator



1. Install the window regulator sub-assembly ② on the door body, and tighten the eleven M8*20 hexalobular socket flange bolts ① with T40 pattern to 16±2Nm.
2. Clamp the door lock wire into the built-in bayonet of the window regulator.

Install the door controller

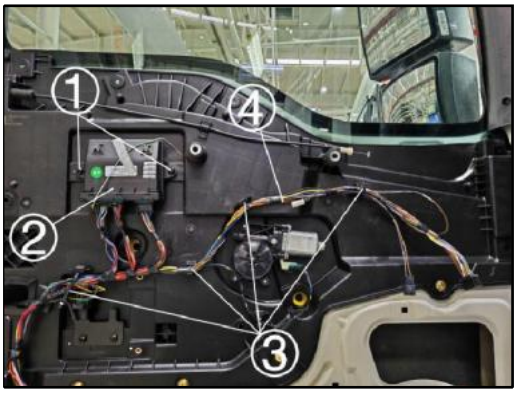

1. Install the door controller ② on the window regulator, and tighten the M6*20 cross recessed pan head screw ① with a cross head screwdriver.
2. Connect the door harness ④, and fix the door harness to the window regulator with a clamping plate strap ③.

Install the door glass



1. Put the door window ② into the regulator and guide rail, clamp the lower end into the window bracket, and use a cross head screwdriver to tighten the M4.8*19 cross recessed pan head tapping screw ① to 3.5+1Nm.

Note: During assembly, ensure the text mark on the glass is upright and oriented towards the rear of the vehicle when viewed from the outside.

Install the door foam lining

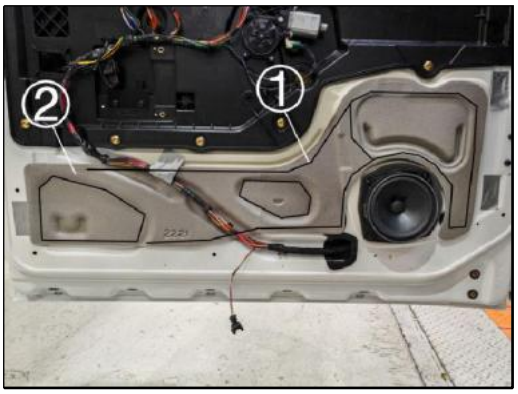

1. Apply the adhesive to the door body along the track ① in the figure with a glue gun, and bond the door foam lining ② to the outside.

Installation of window frame



1. Clamp the upper middle boss of the window frame ② and the limits on both sides of the lower part into the mounting holes of the door frame, and tighten the M4.8*35 half-round hexalobular socket pan head tapping screws screw ① with a T25 Torx bit socket.

Install the door sunshade



1. Install the sunshade ④ into the window frame, align the upper mounting hole with the window frame mounting hole, and tighten the M4.8*35 half-round hexalobular socket pan head tapping screws screw ③ (back of the marking point) with a T25 Torx bit socket.

2. Install the guide rod ② at both ends of the sunshade, and fix the guide rod feet on the window frame with M4.2*13 cross recessed pan head tapping screws ① with a cross head screwdriver at the lower end.

Install the door lining assembly



1. Connect the door lock cable to the door opening handle; Clamp the interior trim panel body assembly ③ with the door slot hole in place.

2. Tighten the M4.8*35 half-round hexalobular socket pan head tapping screws screw ① with a T25 insert.

3. Use an 8mm socket wrench to tighten the M6*70 hexagon flange bolt ② to 8±1Nm.

4. Tighten the M6*20 cross recessed pan head tapping screw with a cross head screwdriver, and install the interior trim panel cap ④ in the screw mounting hole.

Note: During assembly, throw the door lamp and door control switch harness out of the mounting hole in advance.

Install the window regulator switch



1. Connect the door control switch harness, and install the door control switch (1) in the mounting hole of the door interior trim panel body assembly.
2. Install the movable ashtray assembly (2) at the front end of the door interior trim panel body assembly.

Install the door handle trim panel



1. Install the door handle trim panel on the outside of the handle of the door interior trim panel assembly and clamp it in place.

Door lock

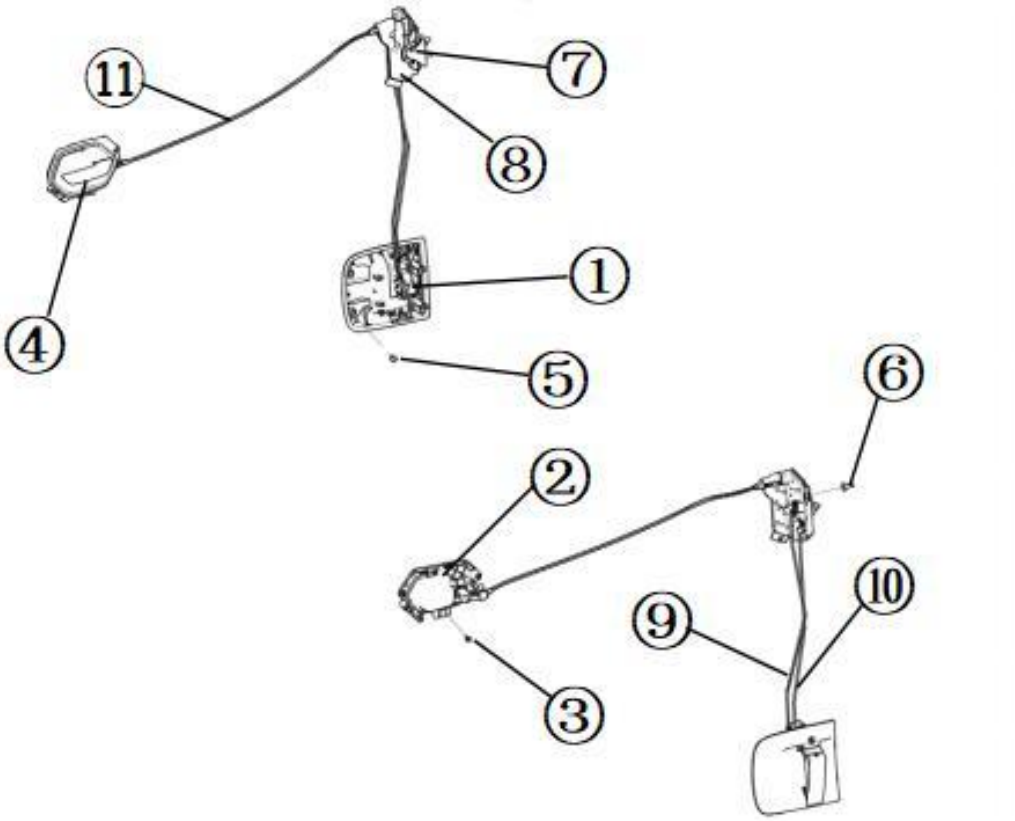

1. Door outside assembly 2. Left door inside assembly 3. Cross recessed pan head tapping screw 4. Right door inside assembly 5. Hexalobular inner pan head bolt 6. Hexalobular inner countersunk head screw 7. Pin and bracket 8. Lock body assembly 9. Door outside locking pull rod assembly 10. Door outside pull rod 11. Inside pull wire assembly

Remove the lock rod

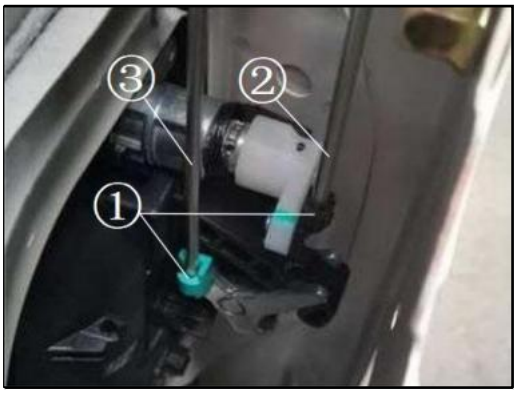

Removal steps

1. Remove the pull rod clip ① with needle-nose pliers, and remove the outside pull rod ② and the outside locking pull rod ③.

Remove the door handle

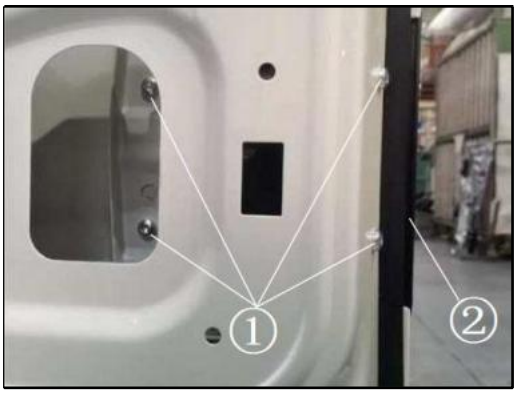

1. Remove the M6*10 hexalobular inner pan head bolt ① with a T30 socket, and take out the door outside handle ②.

Remove the lock body sub-assembly



1. Remove the M6*10 hexalobular inner pan head bolt ① with a T30 socket, and take out the door lock body sub-assembly ②.

Remove the door lock pin

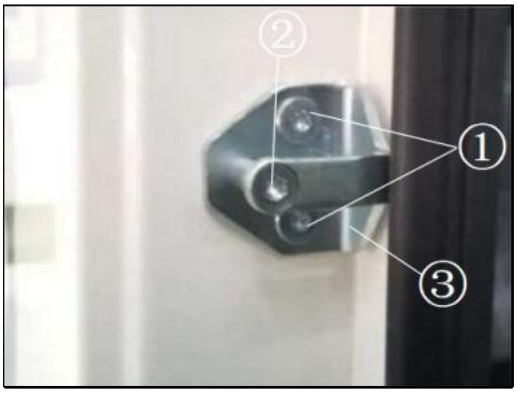

1. Remove the M8*20 hexalobular socket countersunk head screw ① and M8*60 pin ② with a T40 Torx bit socket, and take out the door lock pin bracket ③.

Install the door lock pin

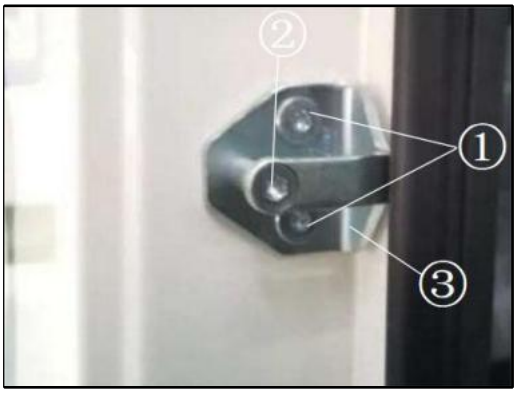

Installation steps

1. Loosely install the attached M8*60 pin shaft ② in the middle of the lock pin to the hole in the middle of the body with a T40 Torx bit socket, and loosely fix the door latch ③ in the upper and lower holes with M8*20 hexalobular socket countersunk head screws ①.

2. Adjust the position of the door lock pin ③ to ensure that there is no interference between the lock body and the lock catch after the door is closed. Use a T40 Torx bit socket to tighten the lock catch fixing bolt to 20±2Nm.

Install the lock body sub-assembly



1. Sub-assemble the pull rod on the lock body, clamp it in place, and fix the lock body ② on the door body with T30 socket M6*10 hexalobular inner pan head bolt ① with a tightening torque of 8±1Nm.

Note: Apply 2271 threadlocker before tightening the bolts, and make the outside and outside locking pull rods face downward during installation.

Install the door handle

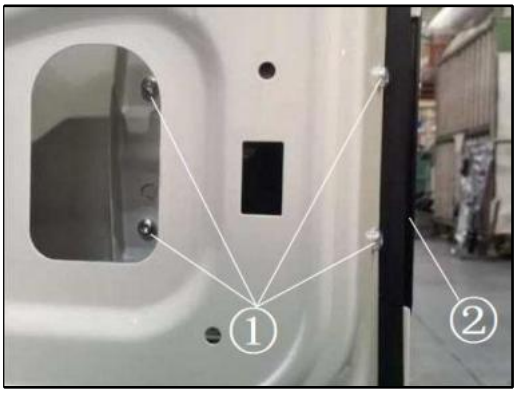

1. Install the door handle ② into the door body mounting frame, and tighten the M6*10 hexalobular inner pan head bolt ① to 8±1Nm with a T30 socket.

Note: Apply 2271 threadlocker before tightening the bolts.

Install the lock rod

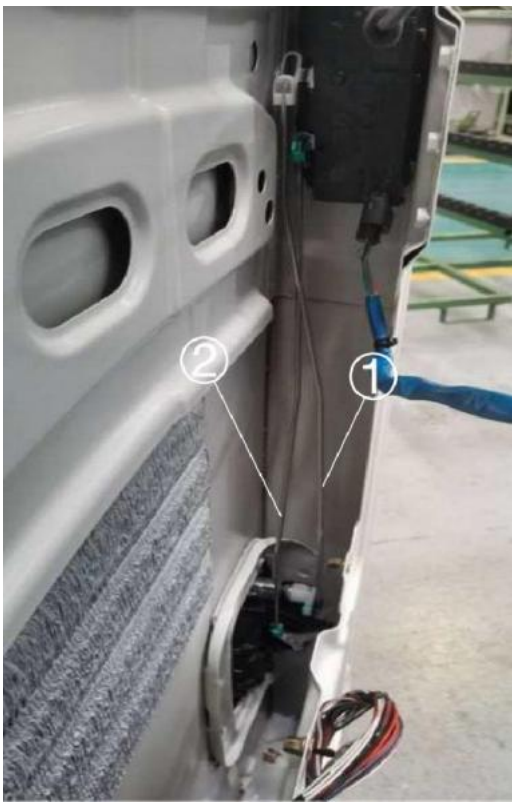

1. Connect the lower ends of the outside pull rod ① and the outer locking rod ② to the corresponding positions of the outside assembly respectively.

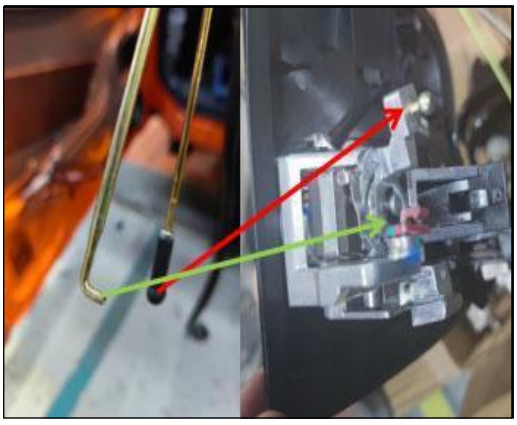

2. When installing the outside pull rod, insert the L head into the clip hole, press the clip and the outside pull rod tightly, and press the outside locking ball joint and the ball joint of the outside assembly tightly to ensure the connection in place and prevent the door lock from failure.

Door lower trim panel

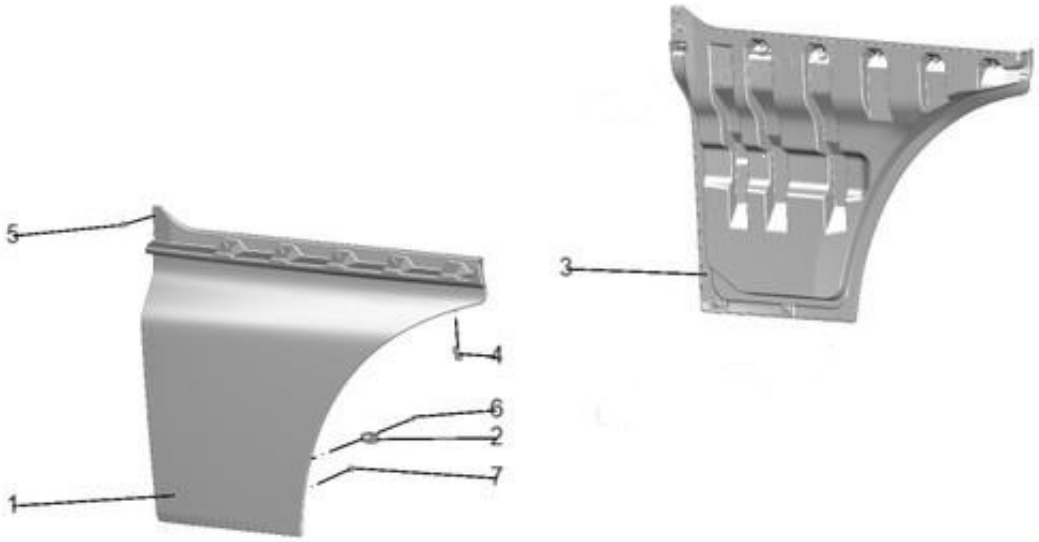

1. Lower trim panel assembly of left door 2. Rubber buffer block 3. Lower trim panel assembly of right door 4. Hexalobular socket head cap screw 5. Blind rivet nut 6. Shoulder head bolt 7. Snap-in rubber buffer block

Remove the door lower guard

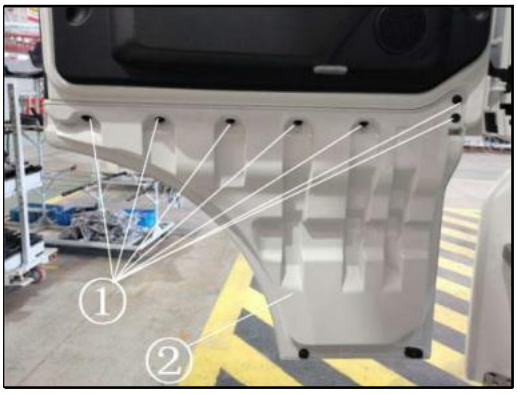

Removal steps

1. Remove the M8*25 hexalobular socket head cap screw ① with a T40 Torx bit socket, and take out the door lower guard ②.

Install the door lower guard

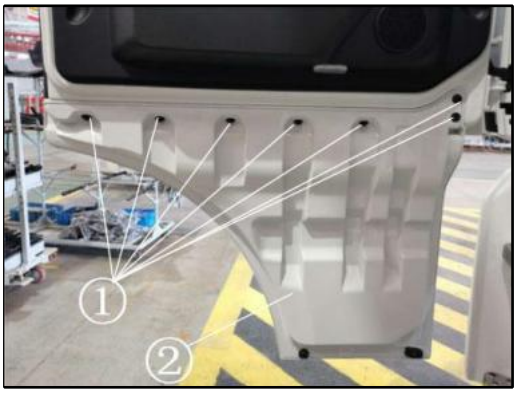

Installation steps

1. Install the door lower trim panel ② on the lower edge of the door body, and fasten it with T40 Torx bit socket M8*25 hexalobular socket head cap screw ① to 9±0.9Nm.

Diversion device

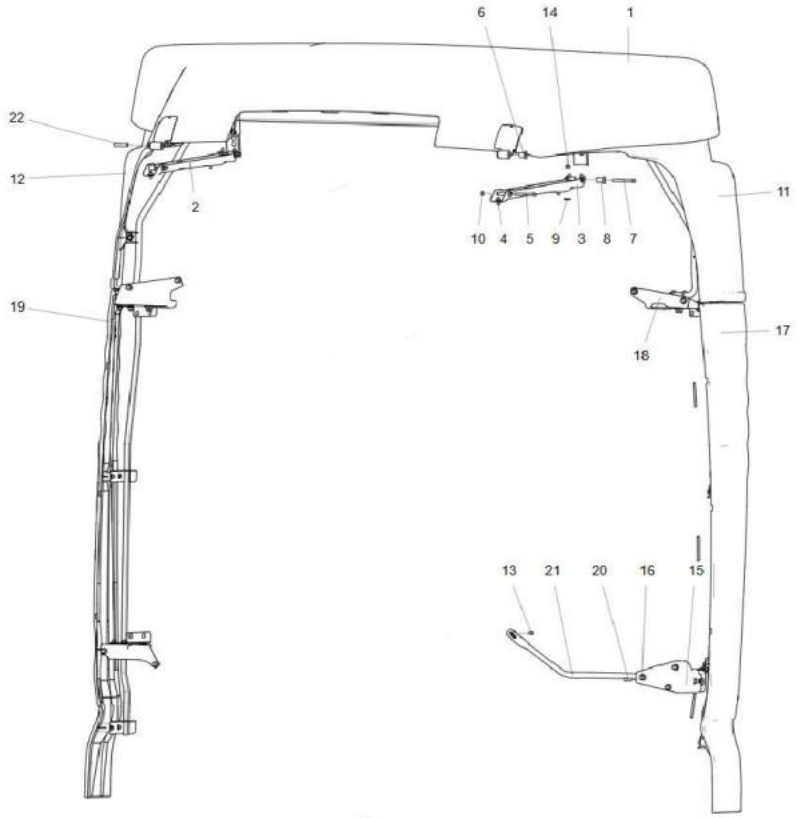

1. Top guide assembly 2. Right fixed guide rail assembly 3. Left fixed guide rail assembly 4. Hexagon socket head cap screw ① 5. Hexagon socket head cap screw ② 6. Shaft sleeve ① 7. Hexagon socket cap screw ③ 8. Shaft sleeve ② 9. Large washer 10. Hexagon head lock nut 11. Left wing deflector assembly 12. Right wing deflector assembly13. Hexagon socket socket head cap screw ④ 14. Hexagon lock nut 15. Fixing bracket 16. Rivet nut 17. Left deflector assembly18. Rubber pad 19. Right deflector assembly 20. Hexagon socket nut ⑤ 21. Lower left stay bar

Remove the lower left stay bar

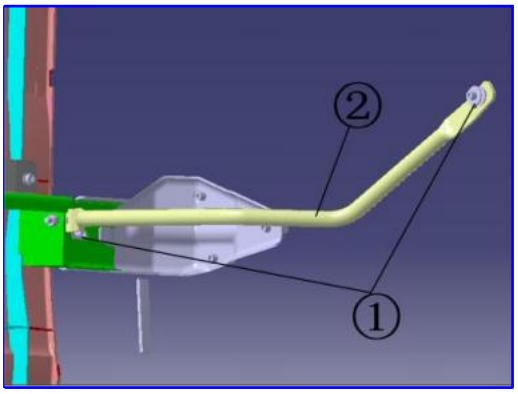

Removal steps

1. Remove the M8*25 hexagon socket head cap screw ① with a T40 socket, and take out the lower left stay bar ②.

Remove the side deflector

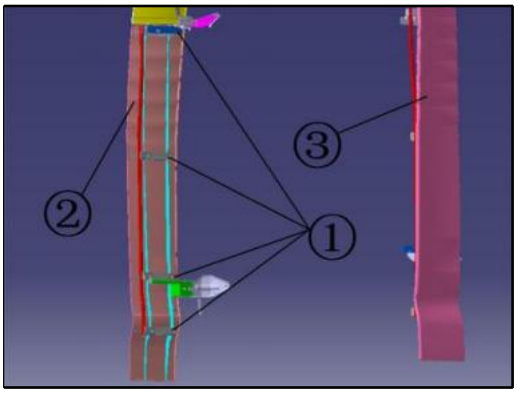

1. Remove the eight M8*25 hexagon socket head cap screws ① with a T40 socket, and take out the left air deflector ② and the right air deflector ③.

Remove the side deflector bracket assembly

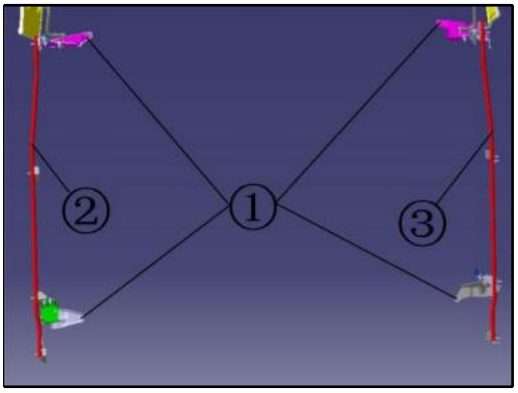

1. Remove the five M8*25 hexagon socket head cap screws ① with a T40 socket, and take out the left air deflector bracket assembly ② and the right air deflector bracket assemblies ③.

Remove the top deflector sub-assembly

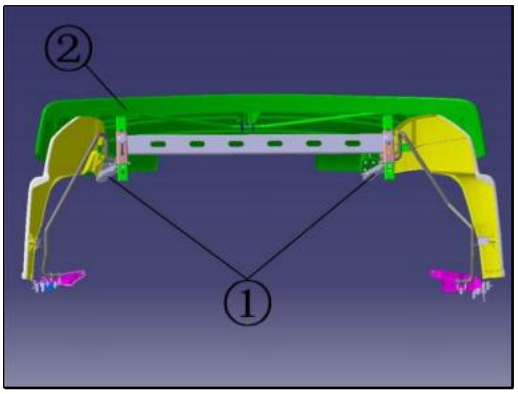

1. Remove the eight M8*25 hexagon socket head cap screws ① with a T40 socket, and take out the top air deflector sub-assembly ②.

Remove the top deflector

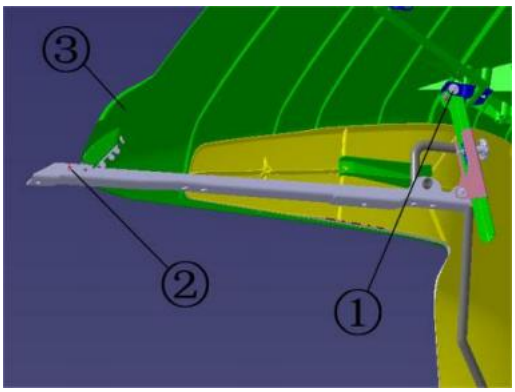

1. Remove the M8*80 hexagon socket head cap screws ① and M8*70 hexagon socket head cap screw ② with a T40 socket, and take out the top deflector ③.

Remove the wing deflector

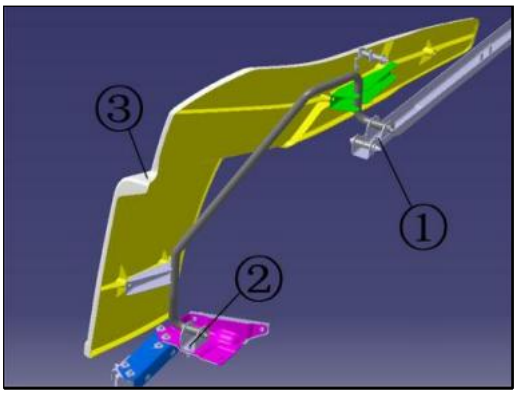

1. Remove the M8 hexagon flange nut ① with a 13mm socket wrench.
2. Remove the M8*20 hexagon socket head cap screw ② with a T40 socket, and take out the wing deflector ③.

Install the side deflector bracket assembly

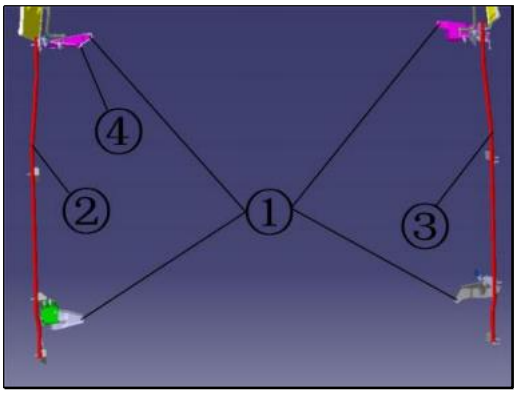

Installation steps

1. Bond the rubber pad ④ on the upper left side to the body.

2. Install the side deflector bracket assembly ② and ③ on both sides of the rear tail of the body, and tighten the M8*25 hexagon socket head cap screw ① to 20±2Nm with a T40 socket.

Note: When installing on the right side, omit the rubber pad and install it directly.

Install the lower left stay bar

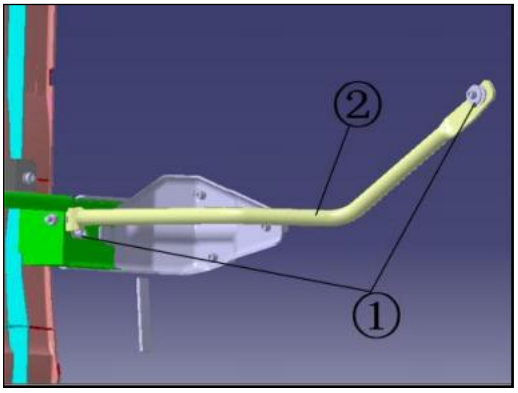

1. Install the lower left stay bar ② between the cab body and the side deflector bracket, and tighten the M8*25 hexagon socket head cap screw ① to 20±2Nm with a T40 socket.

Note: The bolts on the rear deflector side are loose to facilitate the adjustment of the deflector.

Install the side deflector

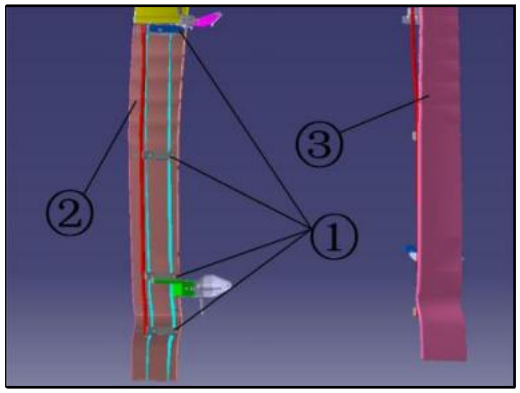

1. Paste the damping rubber pad on the contact surface between the front end of the side deflector and the cab.
2. Install the side deflectors ② and ③ on the rear guide bracket, and tighten the M8*25 hexagon socket head cap screw ① to 16±2Nm with a T40 socket.

Adjust deflector clearance

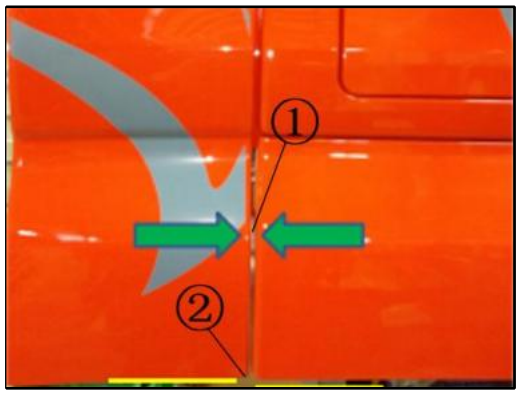

1. The upper and lower clearances between the left deflector and the inlet channel trim panel and between the right deflector and the cab rear wall edge are uniform, and the deflector is pressed on the damping rubber strip. The clearance ① between the fender extension plate and the side deflector is 7.5±1.5 mm; The height difference ② with the lower end of the side deflector is 0-3 mm.
2. Use a T40 socket to tighten the connecting bolt (M8*25 hexagon socket head cap screw) between the lower left stay bar and the side guide bracket to 20±2Nm.

Install the wing deflector

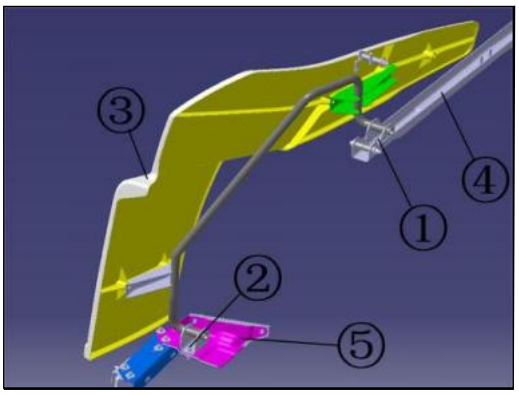

1. Install the upper part of the wing deflector assembly ③ on the fixed track assembly bracket ④, and tighten the M8 hexagon flange nut ① to 16±2Nm with a 13mm socket.

2. Install the lower part of the wing deflector assembly ③ into the upper fixing hole of the side deflector bracket assembly ⑤, and tighten the M8*25 hexagon socket head cap screw ② to 16 ±2Nm with a T40 socket.

Install the top deflector

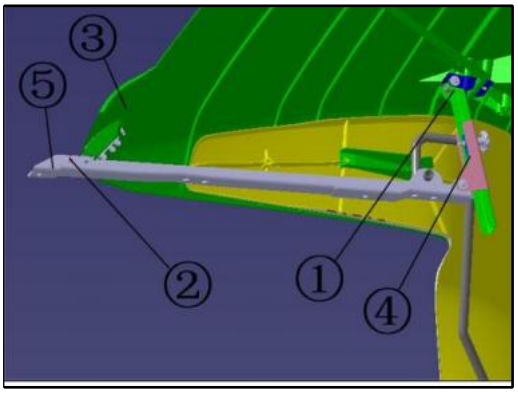

1. Install the rear side of the top deflector ③ on the upper end of the adjusting arm bracket ④, and tighten the M8*80 hexagon socket head cap screw ① to 16±2Nm with a T40 socket.

2. Install the front side of the top deflector ③ to the front section of the fixed guide rail assembly bracket ⑤, and tighten the M8*70 hexagon socket head cap screw ② to 16±2Nm with a T40 socket.

Note: Add a support shaft sleeve to the upper mounting groove of the adjusting arm bracket.

Install the top deflector sub-assembly

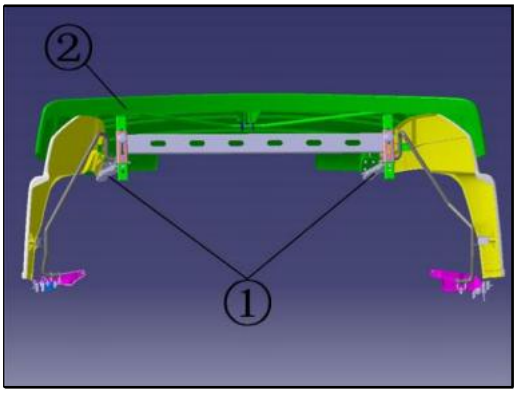

1. Install the top deflector sub-assembly ② on the upper part of the top cover assembly, and tighten the M8*25 hexagon socket head cap screw ① to 16±2Nm with a T40 socket.

Sunroof

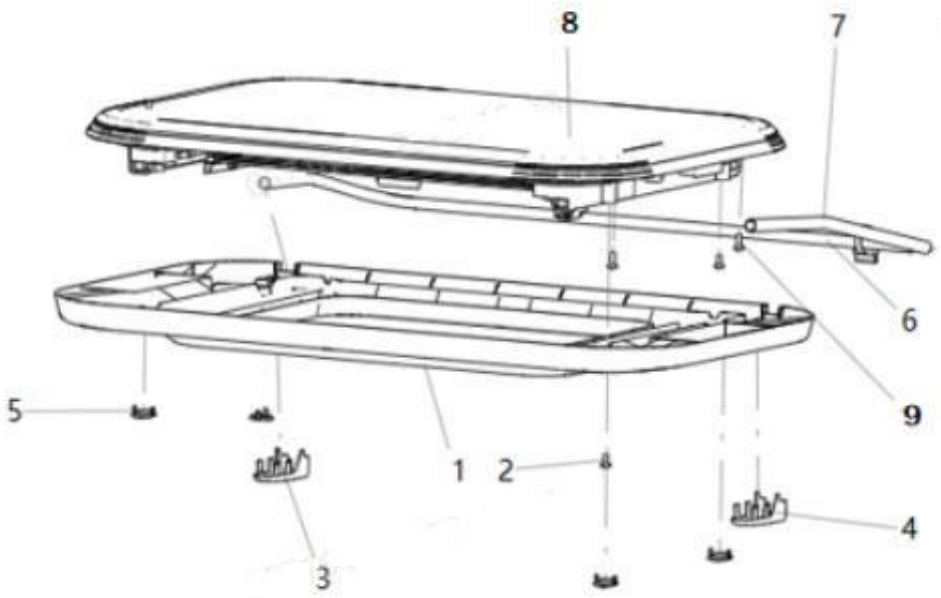

1. Sunroof frame 2. Cross recessed pan head screw 3. Left cover 4. Right cover 5. Sunroof frame blockage 6. PVC hose ① 7. PVC hose ② 8. Power sunroof assembly 9. Cross recessed pan head screw

Remove the sunroof frame

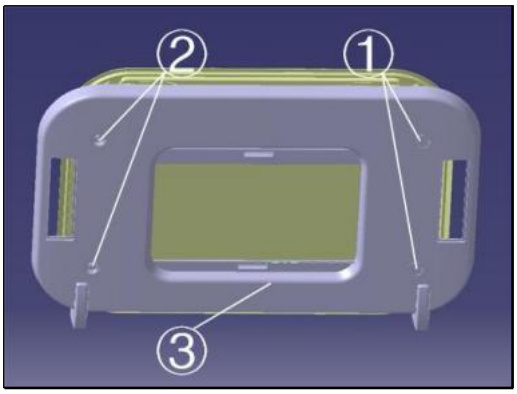

Removal steps

1. Remove the sunroof frame plug ① with a rocker.
2. Remove the M6*12 cross recessed pan head screw ② with a cross head screwdriver.
3. Take out the sunroof frame ③.

Remove the cover

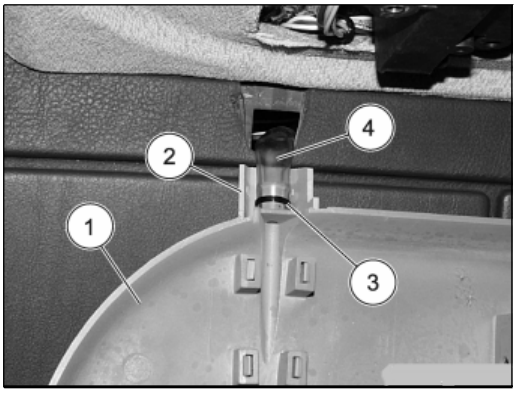

1. Remove the cable tie ③ and take out the PVC hose ④.
2. Remove the cover ② and the sunroof frame ①.

Remove the power sunroof assembly

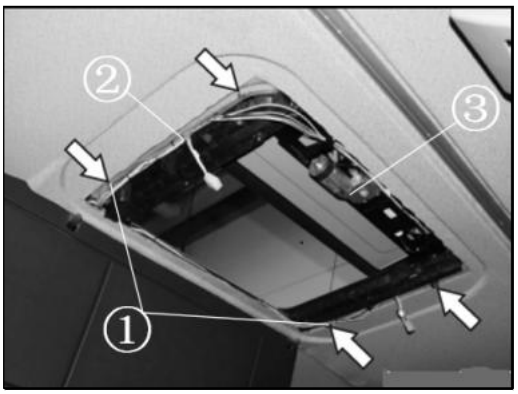

1. Remove the harness connector ②. (This step is not available for manual sunroofs)
2. Remove the M6*20 cross recessed pan head screw ① with a cross head screwdriver.
3. Take out the power sunroof assembly ③.

Install the power sunroof assembly

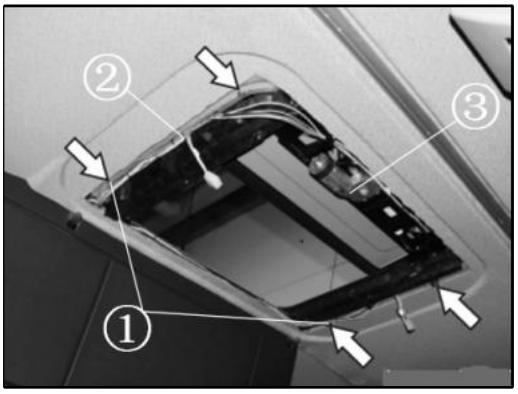

Installation steps

1. Install the power sunroof assembly ③ on the upper end of the top cover, and use a cross head screwdriver to tighten the M6*20 cross recessed pan head screw ① to 7±1Nm.
2. Plug and fix the power sunroof harness ②.

Install the cover

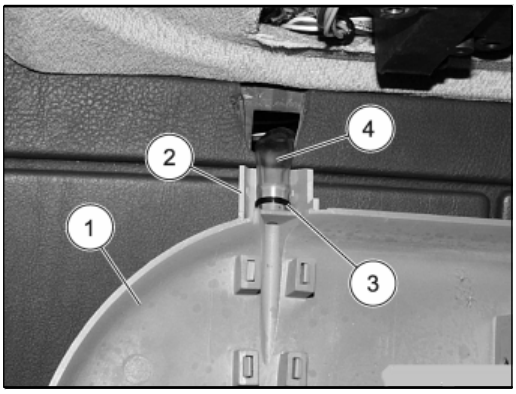

1. Connect the PVC hose ④ to the water outlet of the sunroof frame ① and fasten it with a cable tie ③.
2. Install the cover ② on the sunroof frame ①.

Install the sunroof frame

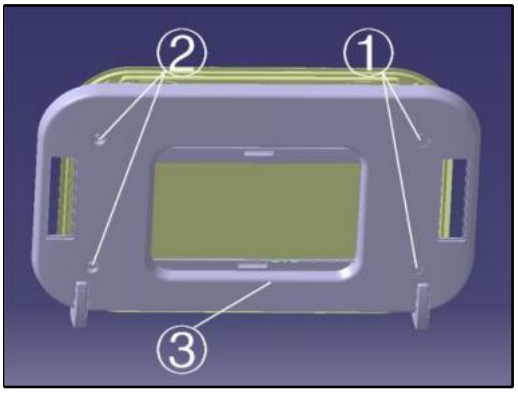

1. Install the sunroof frame ③ to the power sunroof assembly, and use a cross head screwdriver to tighten the M6*12 cross recessed pan head screw ② to 7±1Nm.
2. Install the sunroof frame plug into the screw fixing holes of the sunroof frames.

Front windshield

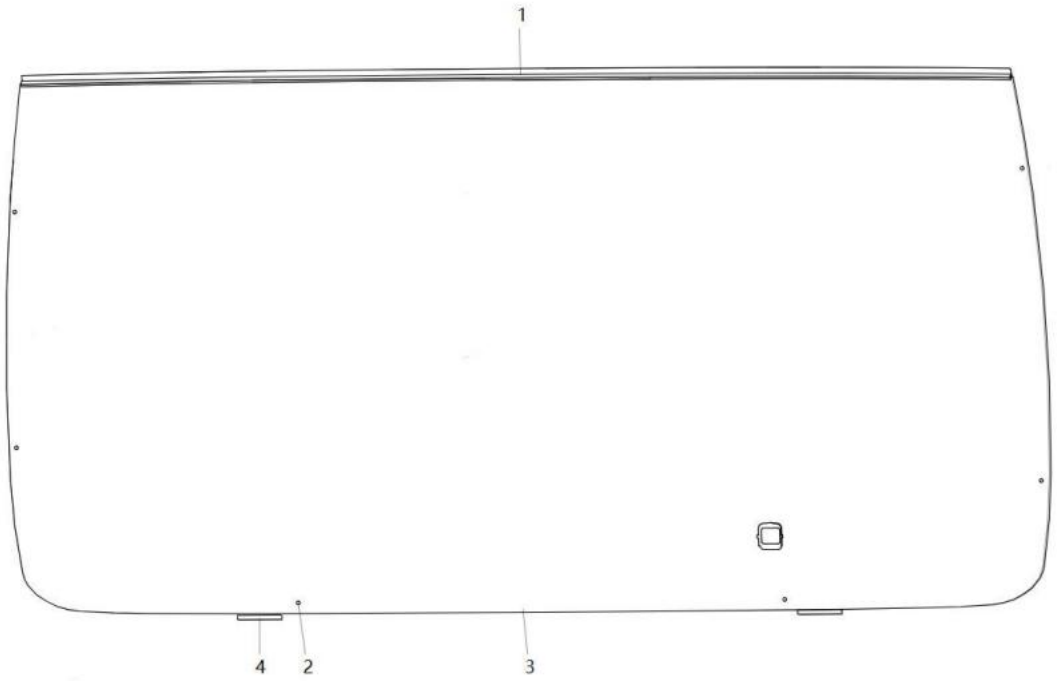

1. Protective strip assembly 2. Spacer block 3. Front windshield assembly 4. Glass cushion block

Remove the protective strip

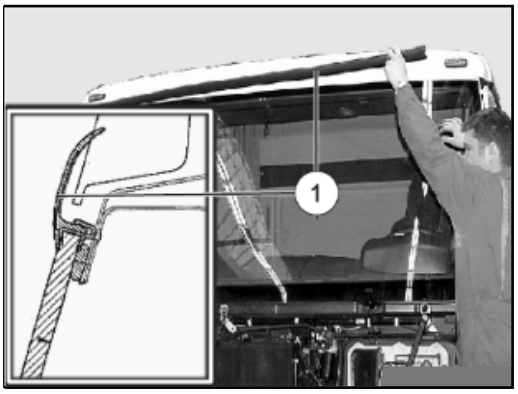

Removal steps

1. Remove the protective strip ① from the upper edge of the front windshield with a rocker.

Remove the front main camera



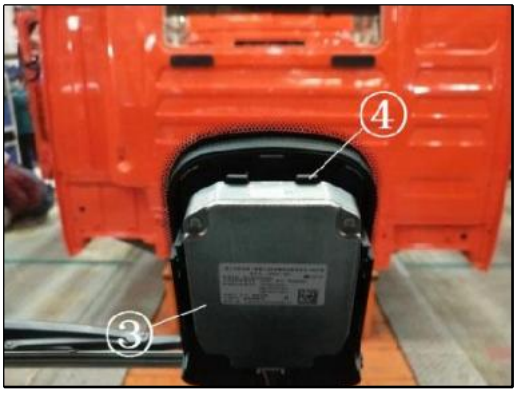

1. Remove the trim cover ② from the camera mounting base ① with a rocker.
2. Push the claw ④ forward and remove the front main camera ③ upward.

Removal of sunlight and rainfall devices

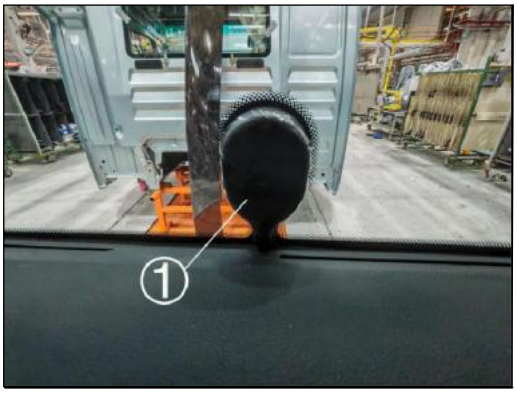

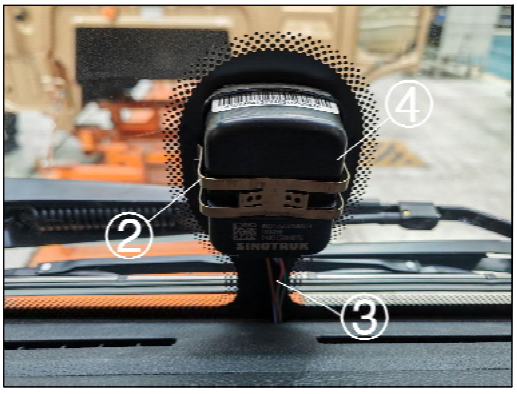

1. Remove the sun/rain sensor cover ① on one side with a rocker.

2. Remove the rain/sunlight sensor ④ at the claw ② with a rocker, take out the sensor harness ③, and take out the rain/sunlight sensors ④.

Remove the monocular camera



1. Tilt the claw ① inward with a rocker, remove the monocular camera ③ upward, remove the camera harness ②, and take out the monocular camera ③.

Remove the front windshield

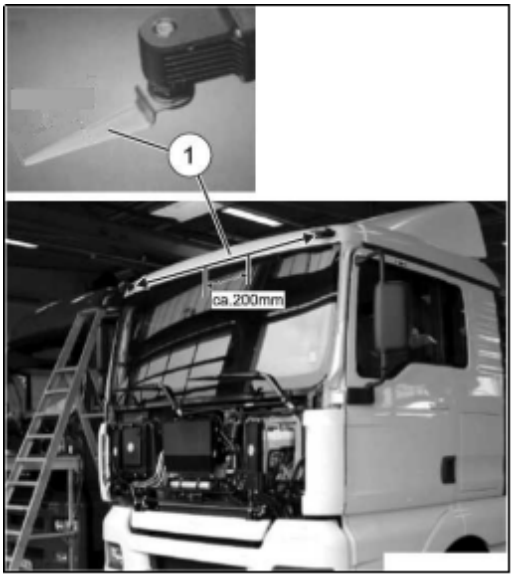

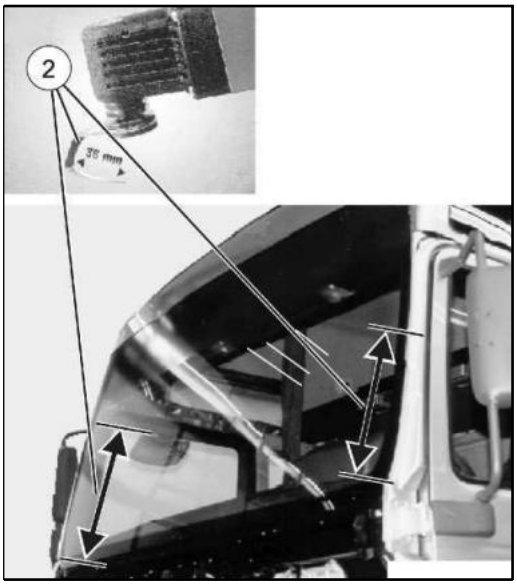



1. Start cutting the windshield from the inside at the top with a cutter ① (double arrow), leaving about 200 mm of complete bonding in the middle to prevent the windshield from falling in subsequent cutting.

2. Cut the façade area from the outside with a curved blade ②.

3. Take out the front windshield with a suction cup ③.

4. Clean the residual adhesive on the bonding surface of the front windshield with a utility knife until a clean bonding surface is exposed.

Installation of protective strip

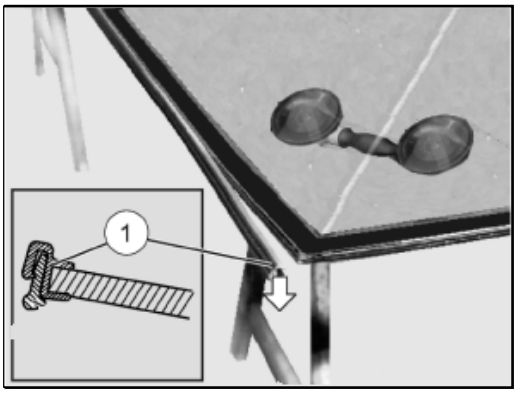

Installation steps

1. Use a rubber hammer to install the protective strip ① on the upper edge of the front windshield, with the opening of the strip facing the outside of the glass.

Clean the glass bonding surface

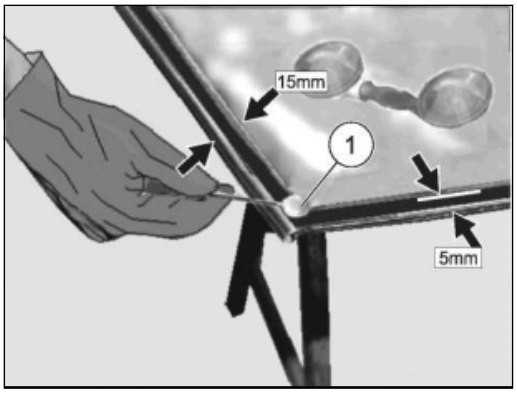

1. Use a clean foam sponge ① dipped in an appropriate amount of activator to wipe along the part of the glass to be bonded, and use another clean foam sponge ② dipped in an appropriate quantity of primer to evenly apply it on the glass bonding surface, with a coating width of about 15 mm and a distance of 5 mm from the edge.

Preparation before bonding

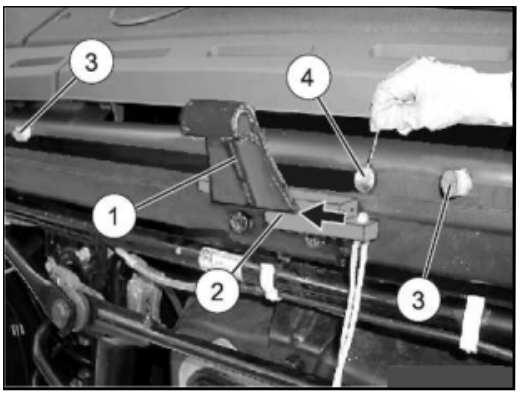

1. Place the glass block ② on the hinge plate ①.
2. Clean the bonding surface of the body with a clean foam sponge ④, and apply an appropriate amount of primer evenly on the bonding surface of the main body.
3. Bond the rubber cushion block ③ evenly on the body, three pieces on the bottom surface and two pieces on the vertical surface.

Install the front windshield

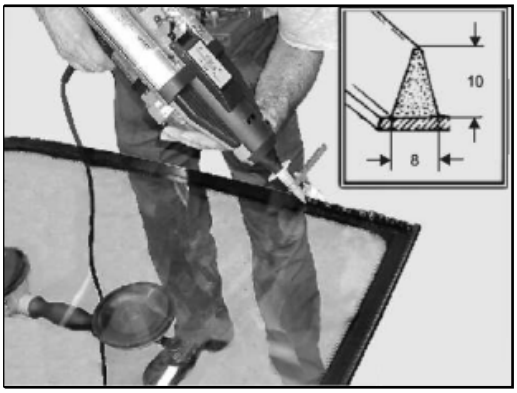

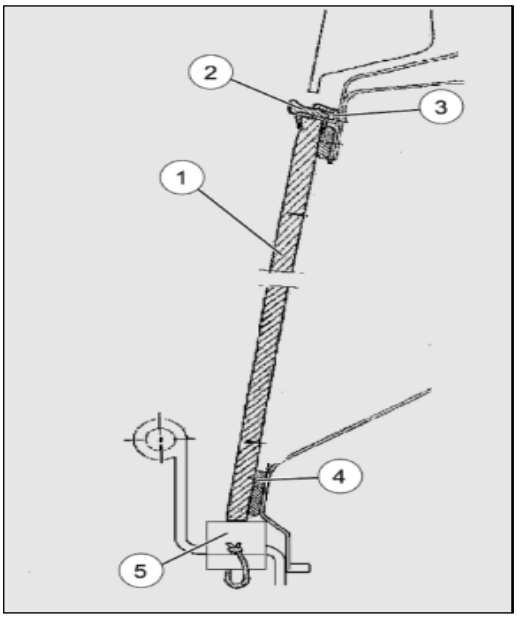

1. Use a glue gun to apply the adhesive along the bonding track of the front windshield. The adhesive is a triangular section adhesive with a height of 8 mm and a bottom width of 10 mm.

2. Place the front windshield ① in the bonding area of the body with a suction cup, place it on the plate hinge plate cushion block ⑤ to align it left and right, and press it into the window frame by external pressure to ensure that the windshield is in full contact with the rubber pad ④ in the bonding plane area of the body and the roof hard contact point of the support ③.

Installation of protective strip

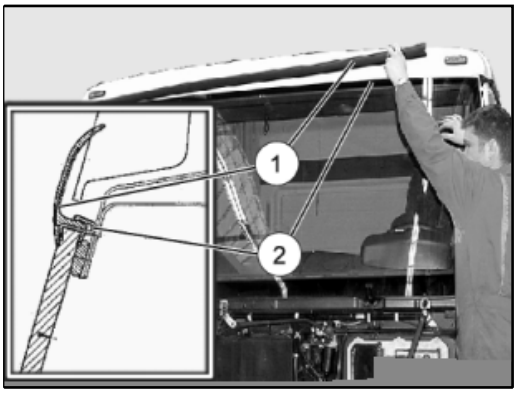

1. Install the protective strip ① into the protective strip ② with a rubber hammer.

Install the front main camera





1. Install the camera ③ on the camera base ①, and lock the base ④ to clamp the camera ③.

2. Connect the camera ③ harness, tear off the release paper in the adhesive area of the bracket base ①, align it with the bonding position of the front windshield, and press it hard for 10-20 seconds.

3. Install the trim cover ② on the base ①, and lock the trim cover on the base clamp interface.

Note: Note that the base must be bonded at one time. It is forbidden to touch the adhesive surface by hand during the bonding process, and it is forbidden for other objects to contact the adhesive surface. The adhesive cannot be bonded repeatedly, and must be discarded after one failure.

Installation of sunlight and rainfall device

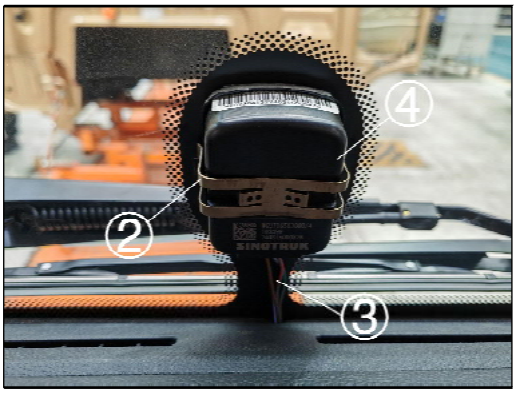

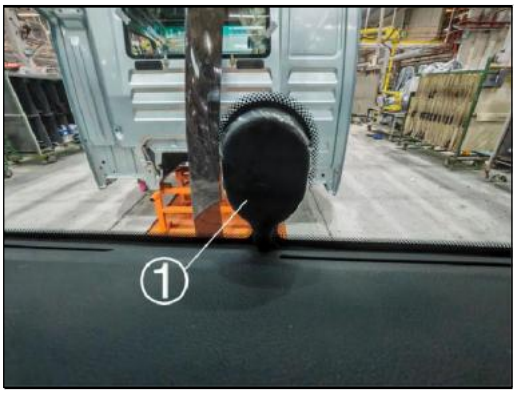

1. Connect the sun and rain sensor harness ③, clamp the sun and rain sensor ④ on the windshield bracket, and clamp the claw ② in place.
2. Clamp the rain/sun sensor cover ① to the outside of the rain/sun sensor.

Install the monocular camera

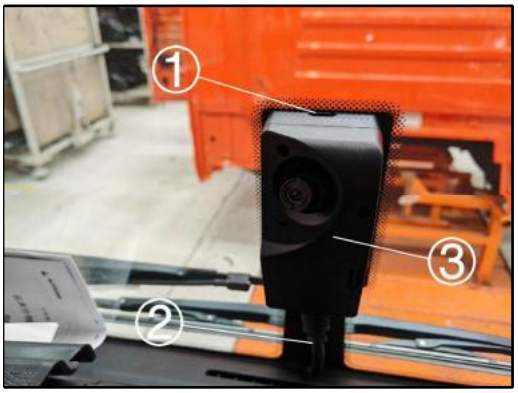

1. Connect the monocular camera harness and clamp the monocular camera to the bracket.

Side window glass

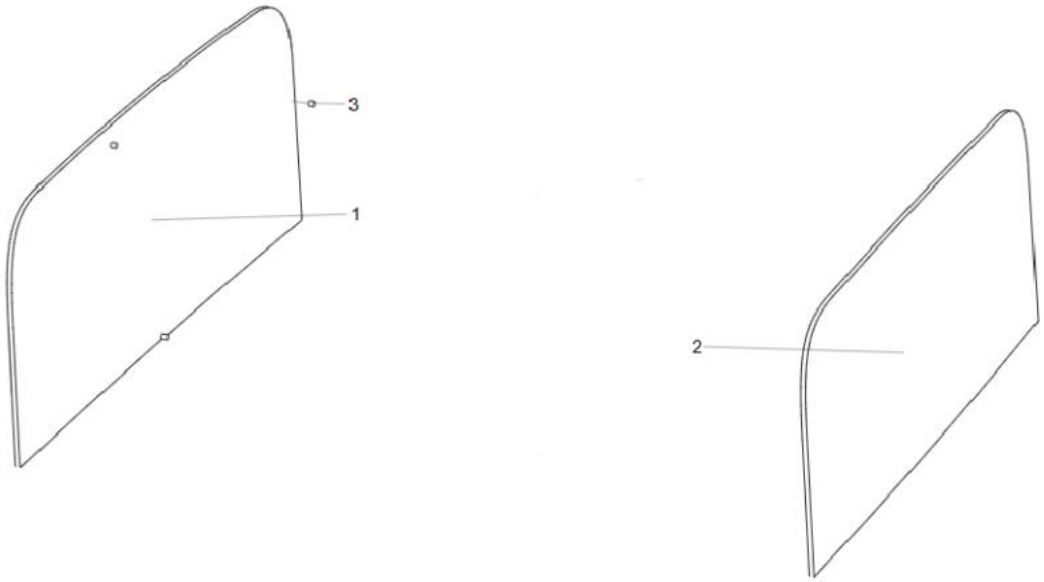

1. Left window glass 2. Right window glass 3. Spacer

Remove the side window glass

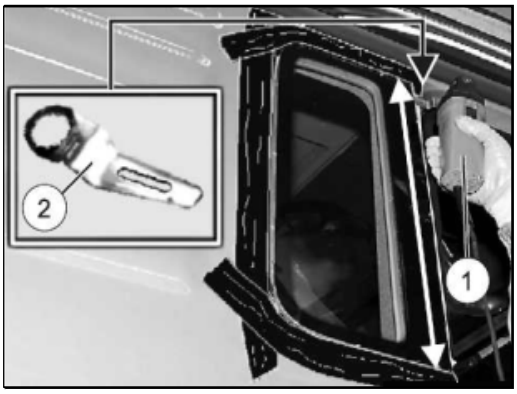

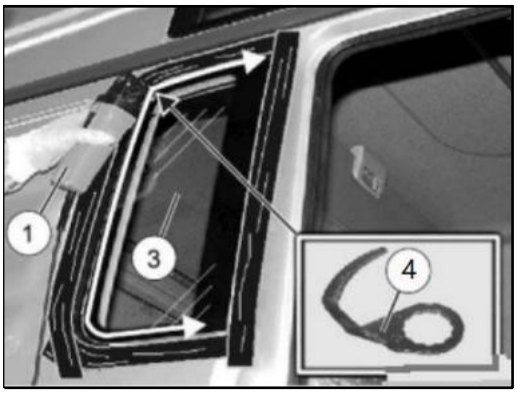

Clean the body surface

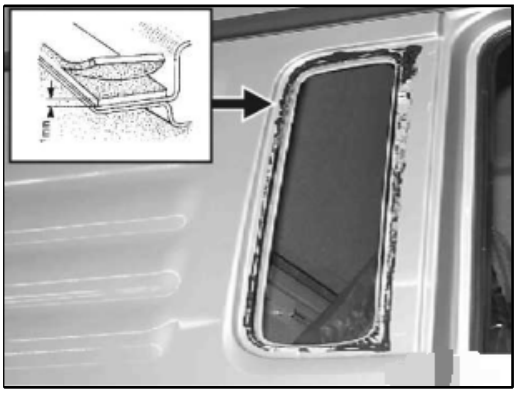

Removal steps

1. Use a cutter ① and a cutter ② to cut the vertical bonding line (white double arrow) of the side window along the B-pillar.

2. Use a cutter ① and a cutter ④ to cut the bonding lines at the rear, top and bottom of the side window (white double arrows), and take out the side window glass with a suction cup.

1. Cut the residual adhesive on the surface of the body with a utility knife.

Preparation before bonding 1

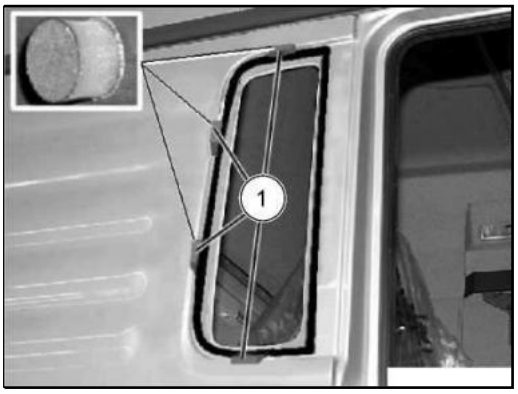

Installation steps

1. Clean the bonding surface of the body with a clean foam sponge, dip an appropriate amount of primer and evenly apply it on the bonding surface, and fix the rubber pad tooling ① around the outer window frame.

Preparation before bonding 2

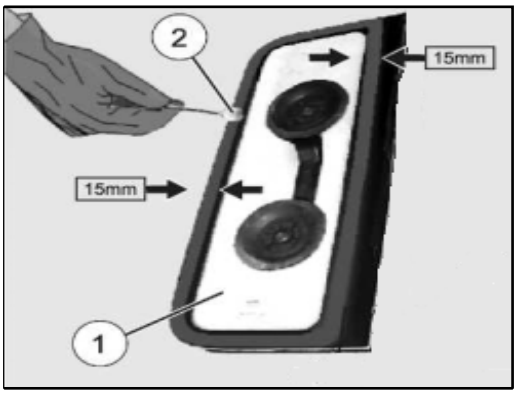

1. Fix the suction cup on the glass, clean the bonding surface of the body with a clean foam sponge, and apply an appropriate amount of primer evenly on the glass bonding surface with a coating width of about 15 mm.

Application on the side window glass

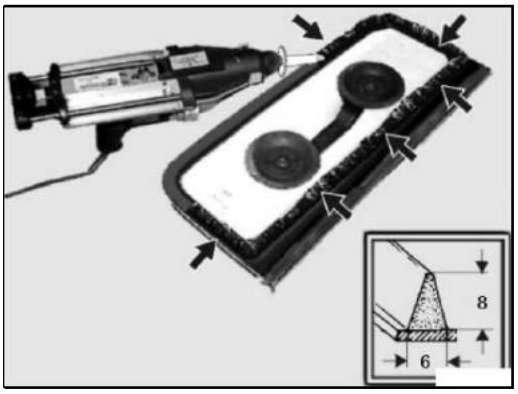

1. Apply the adhesive evenly to the glass with a glue gun, and the glue line shall be a continuous line. The glue line shall be about 6 mm wide at the bottom and about 8 mm high.

Install the side window glass

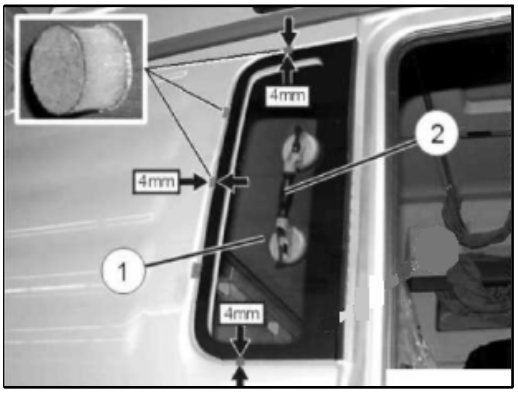

1. Bond the side window glass ① to the side window mounting frame with a suction cup ②, and the glass shall be 4 mm away from the side window frame. After bonding, fix the side window glass with fabric tape. Remove the fabric tape after two hours.

Wiper device

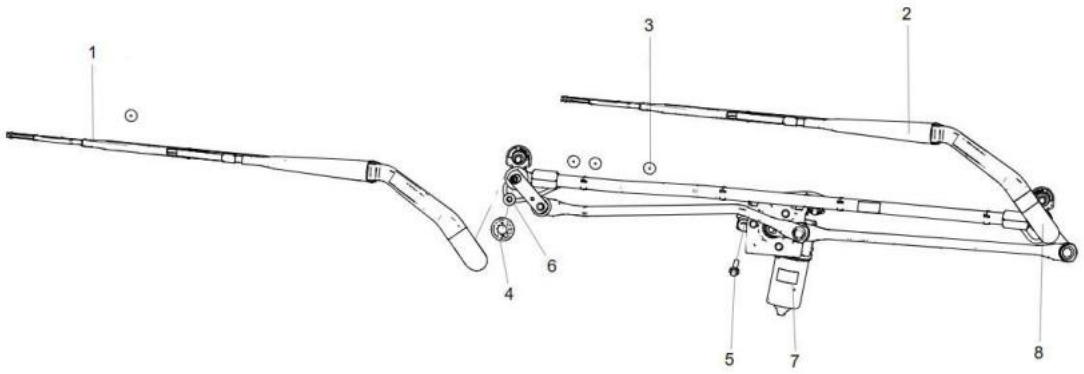

1. Wiper blade assembly 2. Wiper arm assembly 3. Plug 4. Waterproof retainer 5. Hexagon flange bolt M8 6. Hexagon flange nut M10 7. Connecting rod and motor assembly 8. Wiper arm cap

Remove the washer pipe

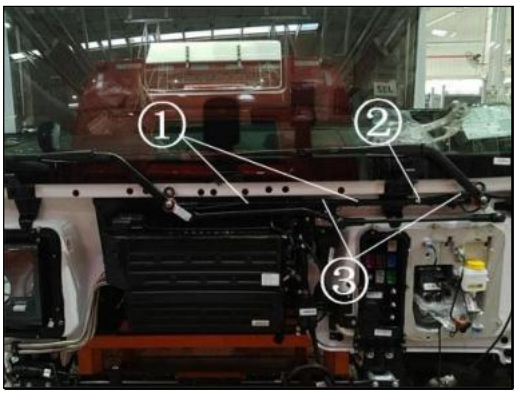

Removal steps

1. Remove the six clamps ① from the washer pipe ③.
2. Remove the tee joint ② connecting the washer pipe ③.
3. Remove the washer pipe ③.

Remove the wiper linkage

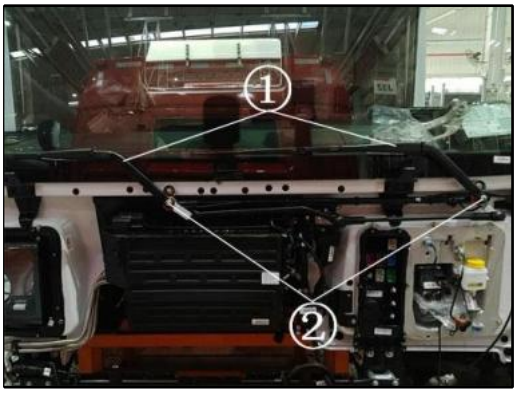

1. Remove the wiper arm cap with a rocker, and remove the M10 flange nut ② with a 14mm socket.
2. Remove the wiper linkage ①.

Remove the motor and transmission

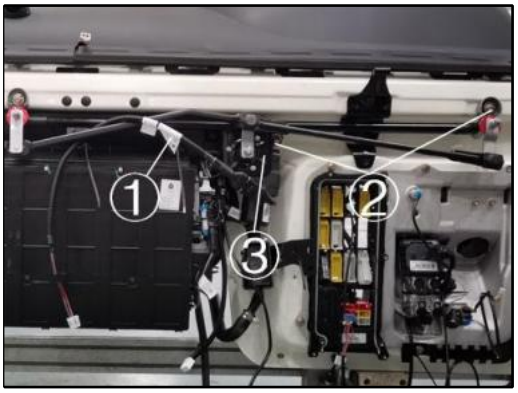

1. Remove the wiper motor harness ①.
2. Remove the M8*30 hexagon flange bolt ② with a 10mm socket wrench.
3. Remove the motor and transmission ③.

Install the motor and transmission

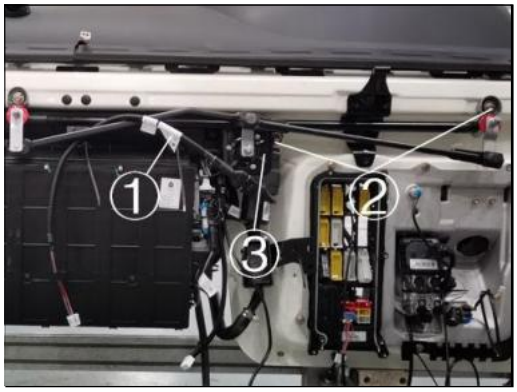

Installation steps

1. Install the motor and transmission ③ to the fixed position of the front wall module.

2. Use a 10mm socket wrench to tighten the M8*30 hexagon flange bolt ② to 20±2Nm.

3. Connect both ends of the wiper motor harness to the motor and front wall harness connector frames respectively.

Note: After installing the motor harness, check that the harness connector is locked in place.

Install the wiper linkage

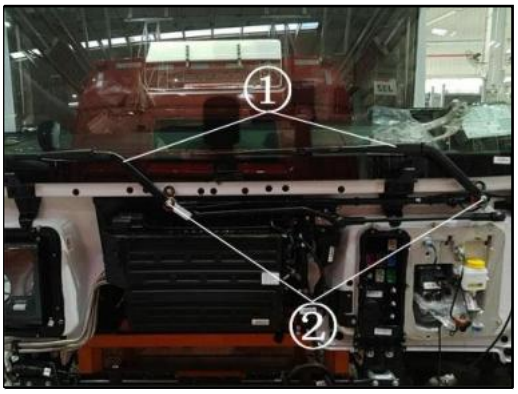

1. Install the wiper linkage ② on the studs at both ends of the transmission mechanism ①.
2. Use a 14mm socket wrench to tighten the M10 flange nut to 35±5Nm.

Note: When tightening the wiper linkage, pay attention to the distance between the connecting rod and the front windshield to avoid crushing the windshield.

Install the washer pipe

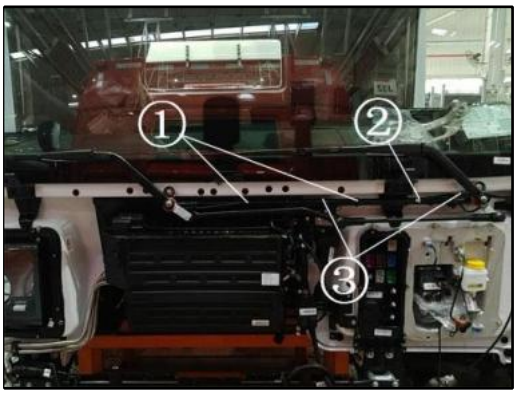

1. Use clamp ① to fix the washer pipe ③ along the drive mechanism stay bar, and the clamp spacing is about 270 mm.
2. Connect the washer pipe ③ with the hose tee joint ②.
3. Install the wiper arm cap outside the connecting rod fastening bolt.

Note: Avoid squeezing the water pipe when fixing it with a clamp.

Washer

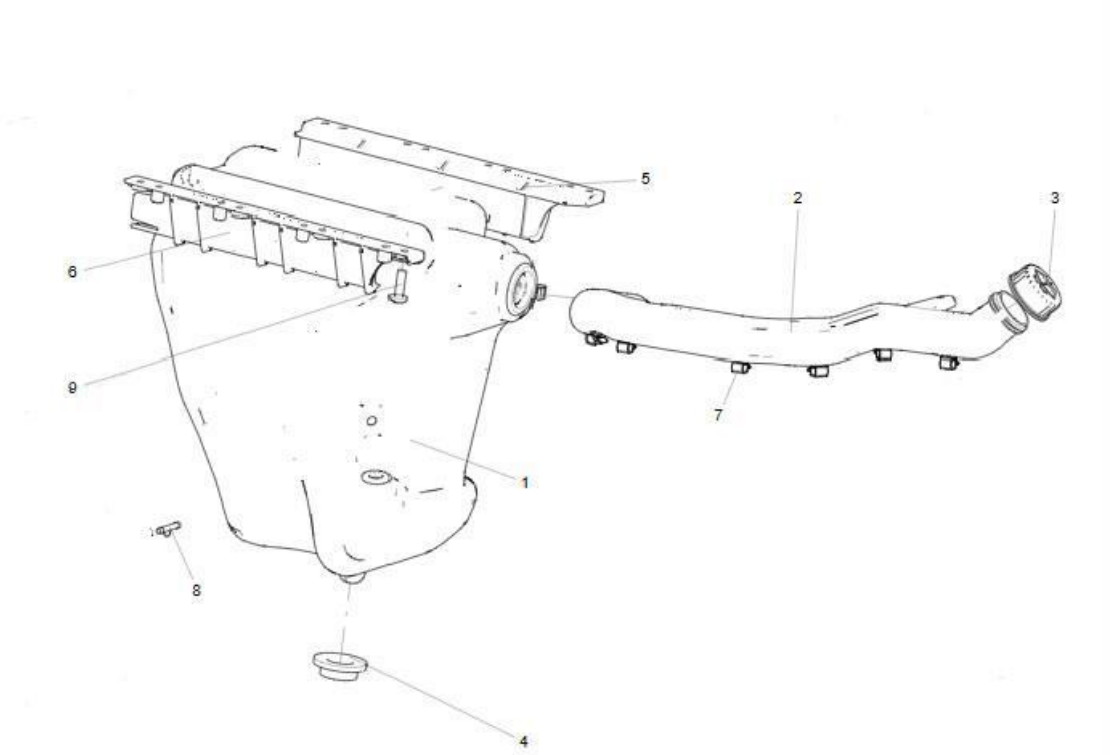

1. Washer assembly 2. Molded pipe 3. End cover 4. Through-hole plug 5. Left bracket 6. Right bracket 7. Clamp 8. Hose tee joint 9. Round head bolt

Remove the washer assembly





Removal steps

1. Remove the M6 hexagon flange nut ② with a 10mm socket wrench.
2. Remove the water pipe connection check valve ①.
3. Remove the washer assembly ④ backward from the bracket ③.

Remove the washer bracket



1. Remove the eight M6*25 round head bolts with a T30mm socket. Take out the washer bracket from the bottom of the cab.

Install the washer bracket



Installation steps

1. Install the washer bracket at the bottom of the cab body, and tighten the M6*25 round head bolt with a T30mm socket.

Note: During installation, the bracket slot shall be inward, and the open end shall be backward.

Install the washer assembly





1. Push the washer assembly ④ in place from the rear to the front in the guide groove of the washer bracket ③ on the left floor of the cab.
2. Tighten the front port of the washer assembly into the built-in stud of the cab body with a 10mm socket M6 hexagon flange nut ② to 4±0.4Nm.
3. Connect the washer pipe and the wiper water pipe together with the check valve ①, the black end of the check valve ① is connected to the washer assembly end, and the white end is connected to the wiper water pipe end.

Front underview mirror

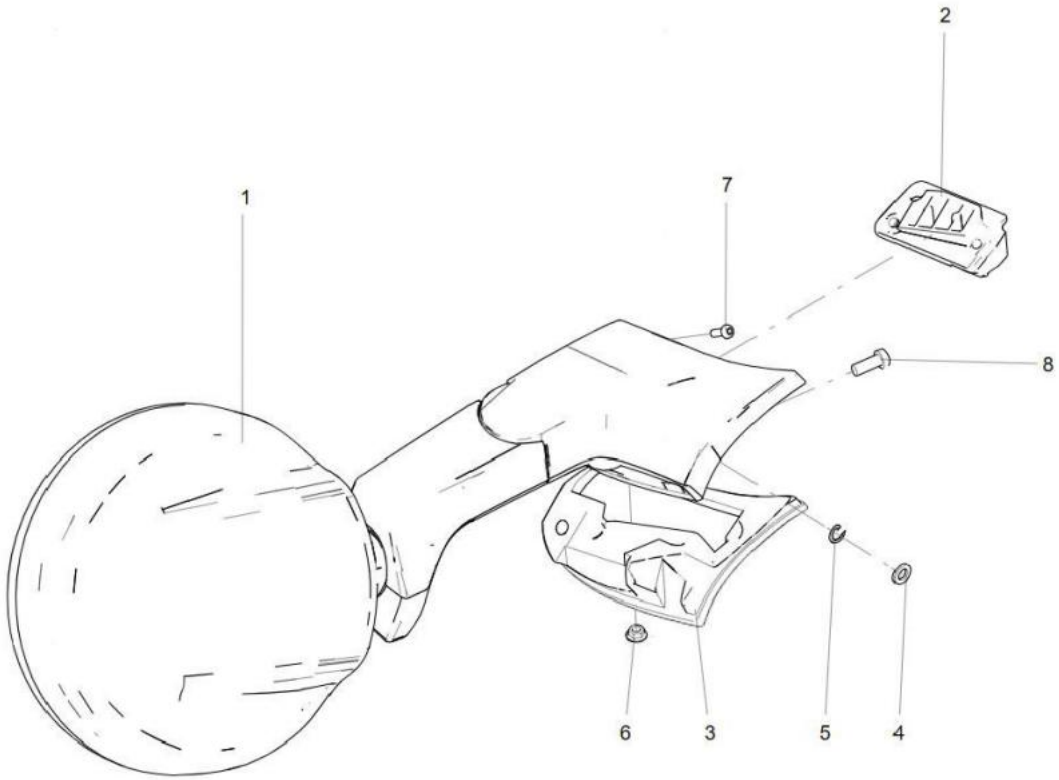

1. Front underview mirror assembly 2. Connector 3. Front underview mirror gasket 4. Small gasket 5. Spring washer 6. Hexagon flange nut M6 7. Cross recessed pan head screw 8. Hexalobular socket head cap screw

Remove the front underview mirror assembly



Removal steps

1. Remove the M5*20 cross recessed pan head screw ① with a cross head screwdriver, and take out the front underview mirror assembly ②.

Remove the front underview mirror gasket

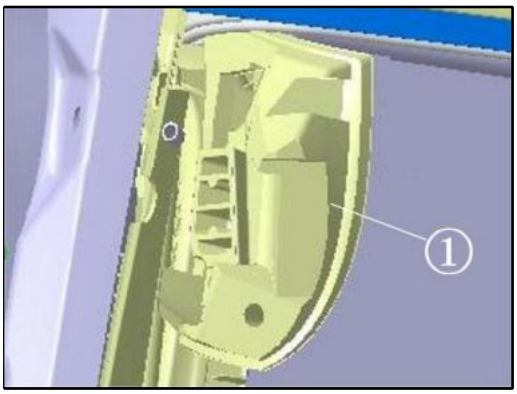

1. Remove the front underview mirror gasket ①.

Removal of connections

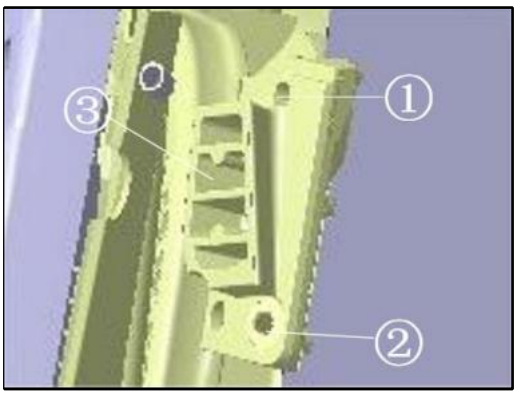

1. Remove the M8*20 hexagon socket head bolt ① with a T40 socket, and remove the M6 hexagon flange nut ② with a 10mm socket.
2. Remove the connecting piece ③.

Note: The hexagon socket bolt ① is on the inner side of the cab A-pillar.

Installation of connecting pieces

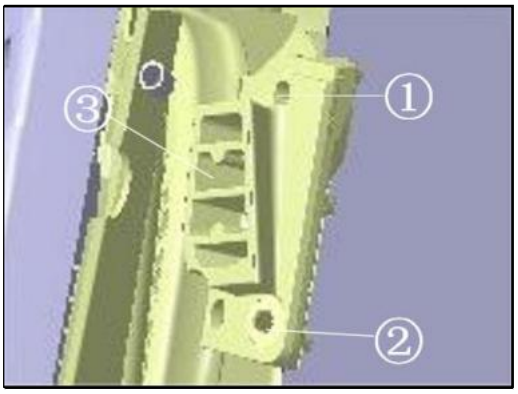

Installation steps

1. Install the connector ③ on the outside of the right A-pillar of the cab, tighten the M8*20 hexagon socket head bolt ① with a 13mm socket to 15±2Nm on the inside, and tighten the M6 hexagon flange nut ② to 3±1Nm with a 10mm socket on the outside.

Install the front underview mirror gasket



1. Sub-assemble the front underview mirror gasket ① into the slot of the front underview mirror ②.

Install the front underview mirror



1. Install the front underview mirror ② on the connector, and use a cross head screwdriver to tighten the M5*20 cross recessed pan head screw ① to (4±0.5) Nm.

Rearview mirror

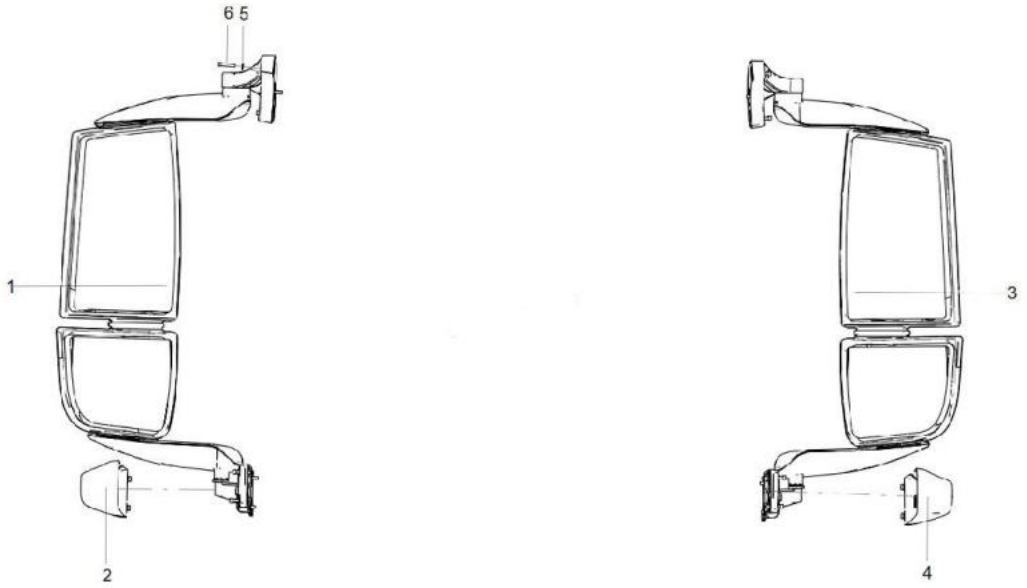

1. Left rearview mirror assembly 2. Right rearview mirror assembly 3. Cross recessed pan head screw 4. Spring washer 5. Large washer 6. Sheath 7. Close-proximity mirror 8. Cross recessed pan head screw 9. Left mirror lower trim 10. Right mirror lower trim

Remove the underview mirror trim

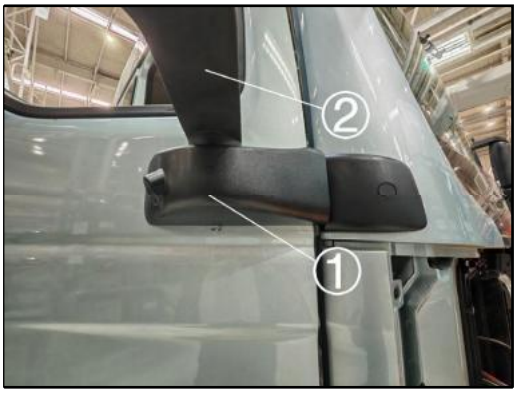

1. Remove the underview mirror trim ① with a rocker at the bottom of the rearview mirror ②, and remove the rearview mirror harness connector.

Remove the rearview mirror assembly

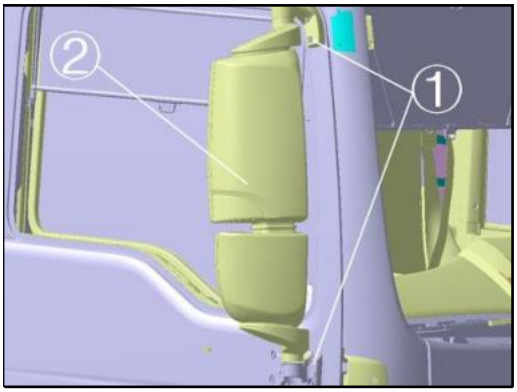

1. Remove the seven M6*30 cross recessed pan head screws ① with a cross head screwdriver, and take out the rearview mirror assembly ②.

Install the rearview mirror assembly

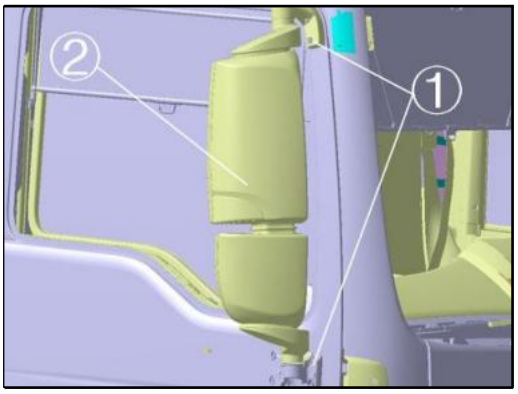

Installation steps

1. Install the rearview mirror assembly ② at the front end outside the door, and use a cross head screwdriver to tighten the M6*30 cross recessed pan head screws ① to 6±1Nm.

Install the underview mirror trim

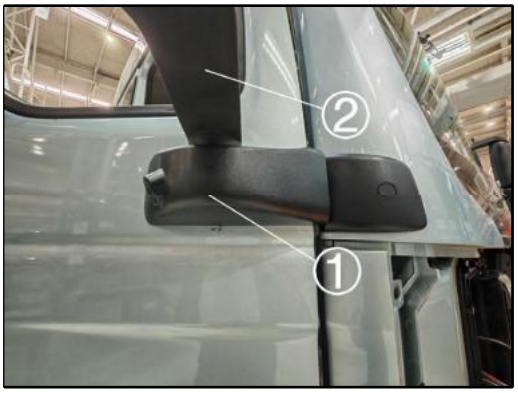

1. Connect the rearview mirror harness connector.
2. Install the rearview mirror trim ① under the underview mirror ②.

Close-proximity mirror

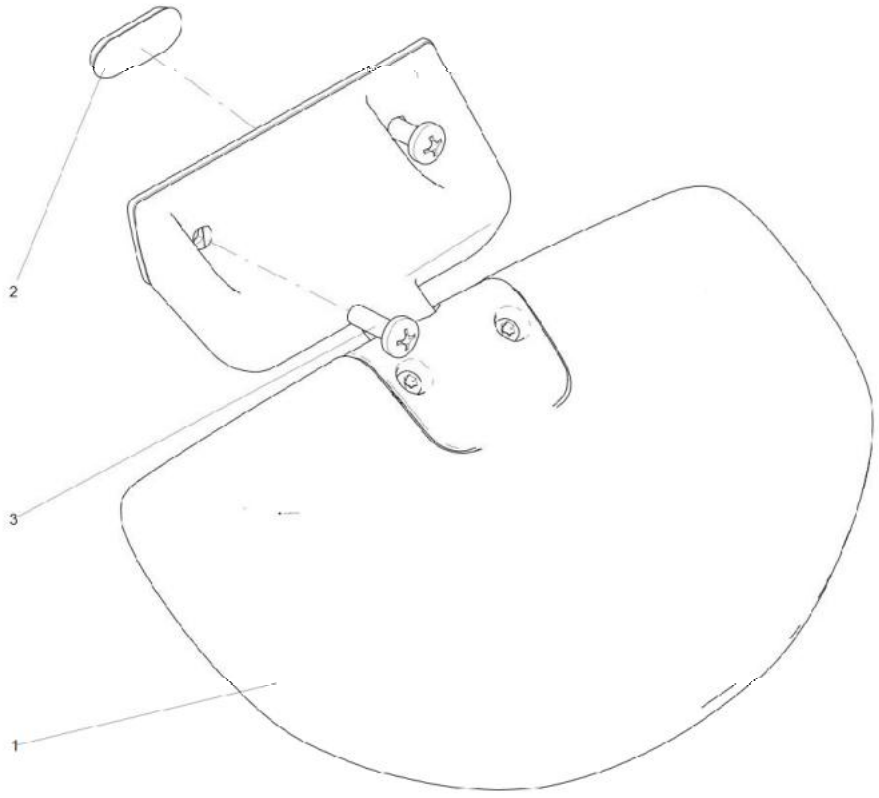

1. Close-proximity mirror 2. Sheath 3. Cross recessed pan head screw

Remove the close-proximity mirror

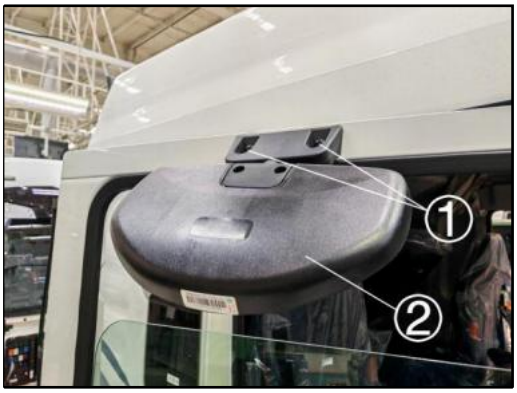

Removal steps

1. Remove the M8*25 cross recessed pan head screw ① with a cross head screwdriver, and take out the close-proximity mirror ②.

Install the close-proximity mirror

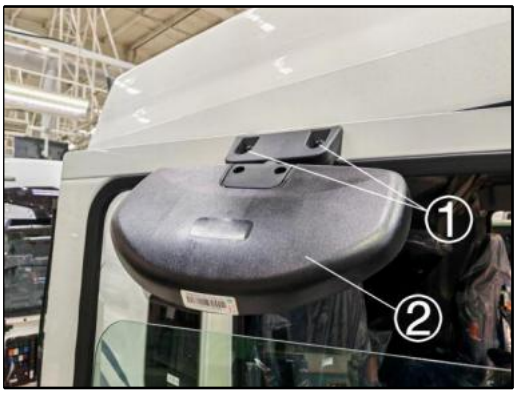

1. Install the close-proximity mirror ② on the upper end of the door, and use a cross head screwdriver to tighten the M8*25 cross recessed pan head screw ① to 12±2Nm.

Bumper

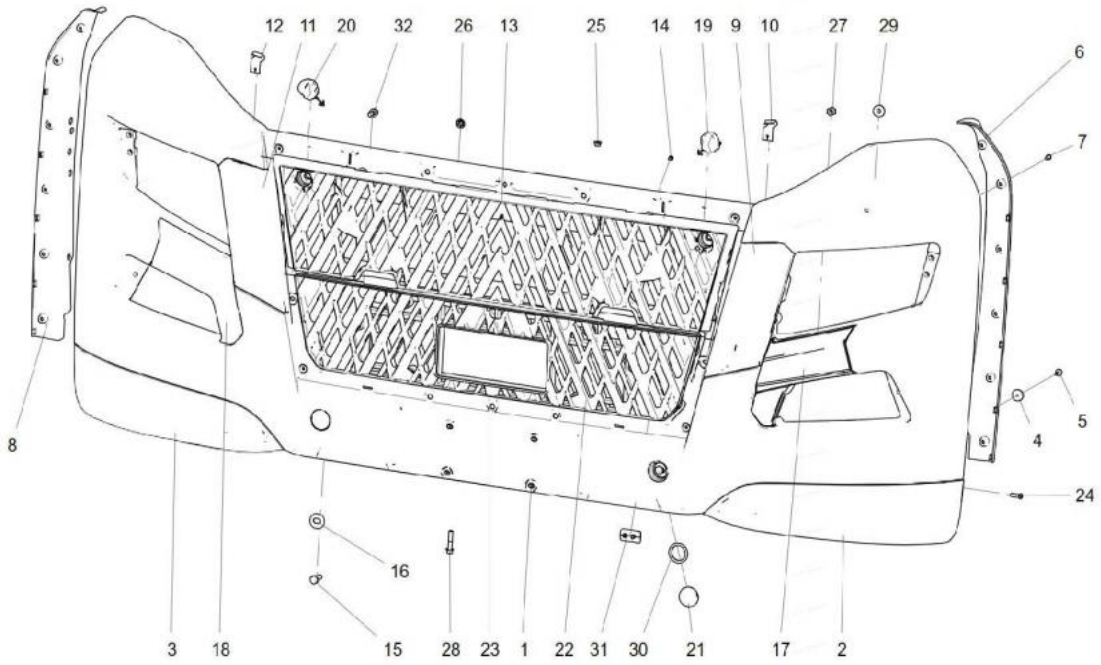

1. Low bumper 2. Bumper lower left trim panel 3. Bumper lower right trim panel 4. Guide rubber plug 5. Screw 6. Bumper left trim panel 7. Hexalobular socket pan head screw 8. Bumper right trim panel 9. Bumper left headlamp cover 10. Left leaf spring 11. Bumper right headlamp cover 12. Right leaf spring 13. Bumper upper trim net 14. Cross recessed pan head tapping screw 15. Hexagon head bolt M12 16. Special gasket 17. Bumper left lamp trim panel 18. Bumper right lamp trim panel 19. Bumper left cap 20. Bumper right cap 21. Blanking cover 22. Bumper lower grille 23. Bumper skid plate 24. Cross recessed panel head screw 25. Hexagon flange nut 26. Yellow sheet nut 27. Hexagon nut M12 28. Hexagon flange bolt M10 29. Large washer 30. Rubber ring 31. Rubber buffer block 32. Adhesive hexagon head

Remove the cap

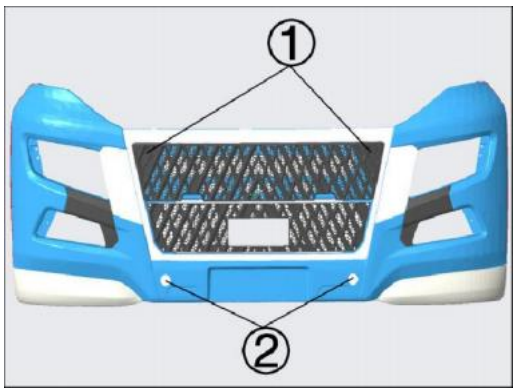

Removal steps

1. Remove the bumper left and right caps ① and trim caps ② with a rocker.

Remove the bumper headlamp trim panel

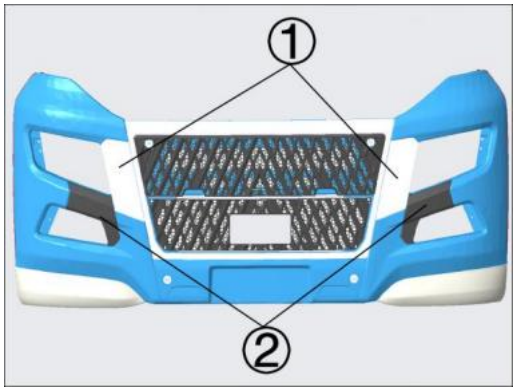

1. Remove the bumper headlamp cover ① and bumper headlamp trim panel ② with a rocker.

Remove the bumper sub-assembly

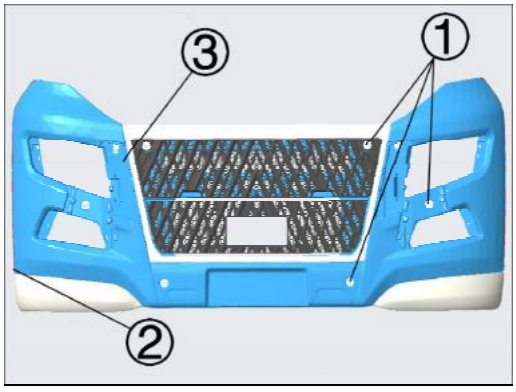

1. Remove the 6 hexagon nuts M12*1.25 and special gaskets ① with a 17mm socket wrench.
2. Remove the M8*25 cross recessed pan head screw ② (the bolt is on the side) with a cross head screwdriver, and take out the bumper sub-assembly ③.

Remove the bumper lower trim panel

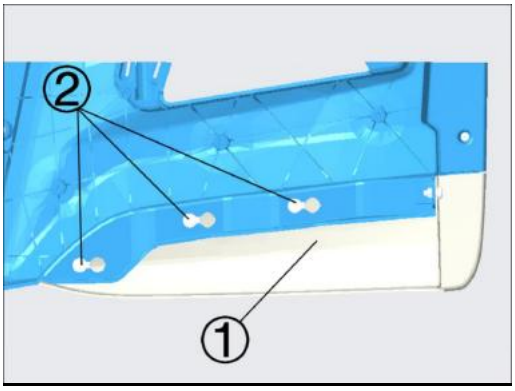

1. Remove the M5*25 screw ② with a T25 socket, and take out the lower trim panel ①.

Remove the bumper side trim panel

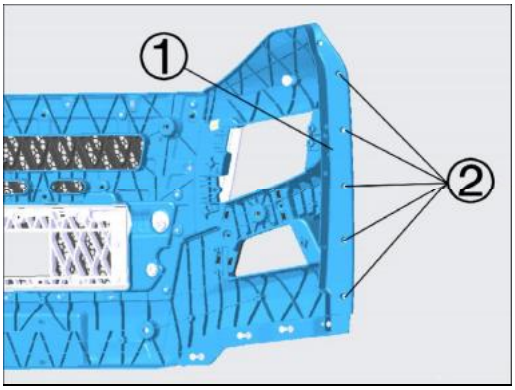

1. Remove the M6*16 cross recessed screw ② with a cross head screwdriver, and take out the side trim panel ①.

Remove the bumper molding

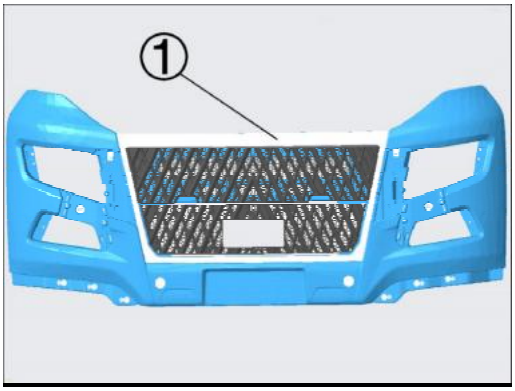

1. Remove the four M4.8*19 cross recessed pan head tapping screws (at the back) with a cross head screwdriver.
2. Remove the 10 leaf spring nuts (at the back) with a rocker, and take out the bumper molding ①.

Remove the bumper upper trim net

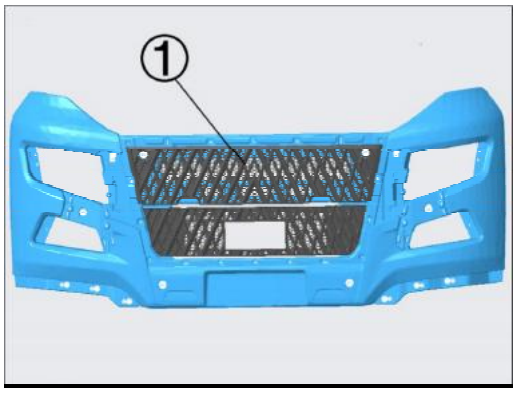

1. Remove the four M4.8*16 cross recessed pan head tapping screws (at the back) with a cross head screwdriver.

2. Remove the 8 leaf spring nuts (at the back) with a rocker, and take out the bumper upper trim net ①.

Remove the bumper lower grille

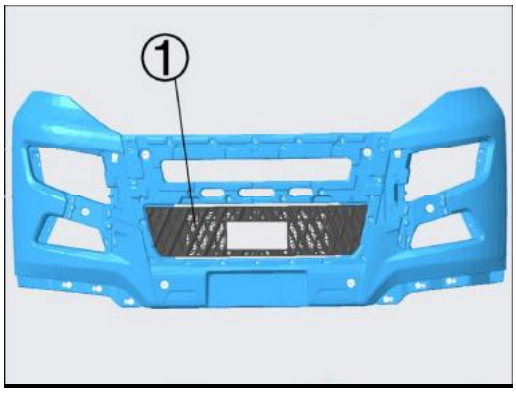

1. Remove the ten M4.8*16 cross recessed pan head tapping screws (on the back) with a cross head screwdriver, and take out the bumper lower grille ①.

Remove the bumper skid plate

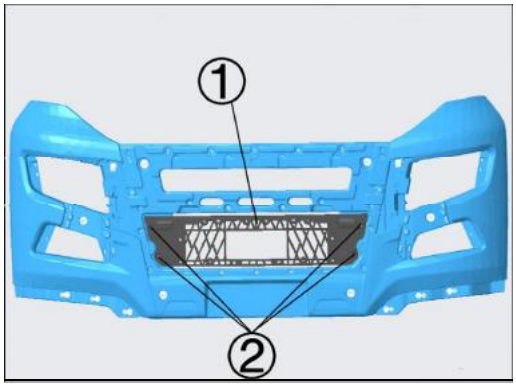

1. Remove the M10*30 hexagon head bolt ② with adhesive with a 15mm socket, and take out the bumper skid plate ①.

Remove the tilting shaft trim panel

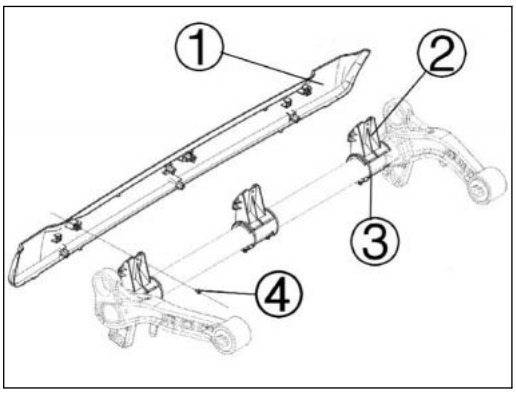

1. Remove the M4.8*13 hexalobular socket pan head tapping screw ④ with a T25 Torx bit socket and remove the tilting shaft trim panel ①.
2. Remove the hose clamp ③ with a 7mm socket, and take out the fixing clip ②.

Install the tilting shaft trim panel

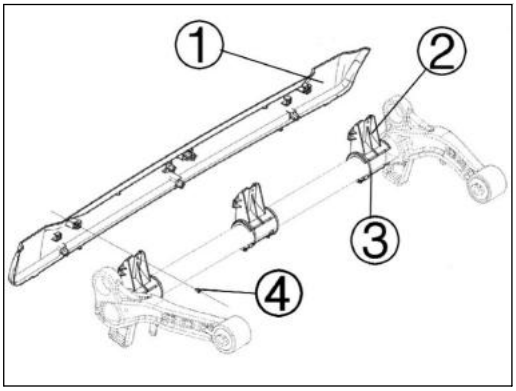

Installation steps

1. Sub-assemble the fixing clip ② on the tilting shaft trim panel ①, and tighten the M4.8*13 hexalobular socket pan head tapping screw ④ with a T25 Torx bit socket.
2. Install the tilting shaft trim panel sub-assembly on the tilting shaft, and fasten the fixing clip ② to the tilting shaft with a 7mm socket hose clamp ③.

Install the bumper skid plate

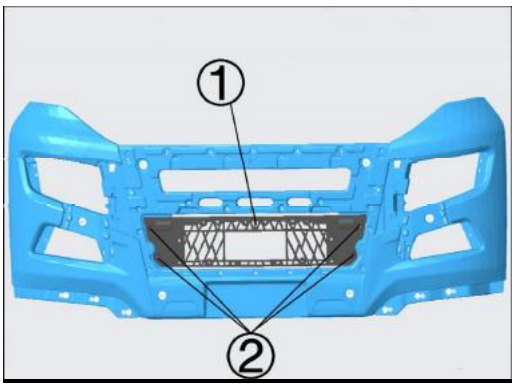

1. Install the bumper skid plate ① on the front bumper mounting bracket, and use a 15mm socket wrench to tighten the M10*30 adhesive hexagon head bolt ② to 45±5Nm.

Install the bumper lower grille

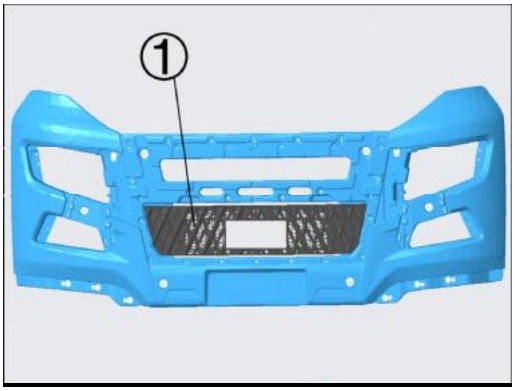

1. Install the bumper lower grille ① on the outside of the bumper skid plate, and use a cross head screwdriver to tighten the ten M4.8*16 cross recessed pan head tapping screws to 3.9 ±0.5Nm.

Install the bumper upper trim panel

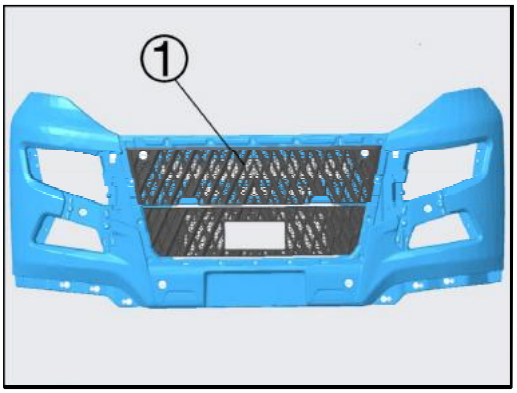

1. Install the bumper upper trim net ① in the middle and upper part of the bumper, and use a cross head screwdriver to tighten the four M4.8*16 cross recessed pan head tapping screws to 3.9±0.5Nm.
2. Fix the upper trim panel of the bumper on the bumper with 8 spring nuts.

Install the bumper molding

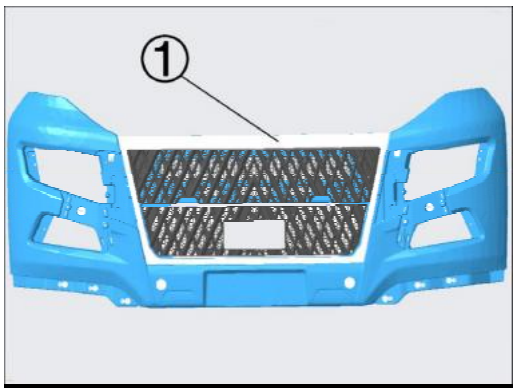

1. Install the bumper molding ① on the outer side of the upper trim panel and the lower grille, and use a cross head screwdriver to tighten the four M4.8*19 cross recessed pan head tapping screws to 3.9±0.5Nm.
2. Fix the bumper molding ① to the bumper with 10 spring nuts.

Install the bumper side trim panel

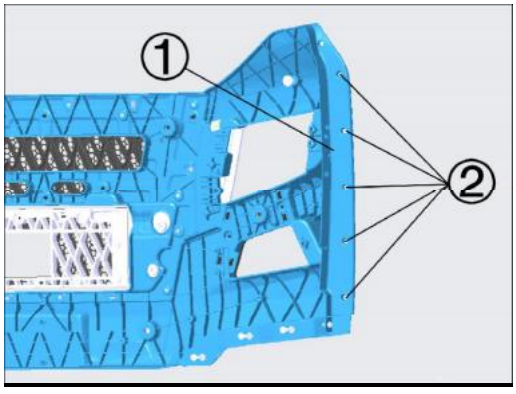

1. Install the side trim panel ① on both sides of the bumper, and use a cross head screwdriver to tighten the M6*16 cross recessed pan head screws ② to 9±1Nm.

Install the bumper lower trim panel

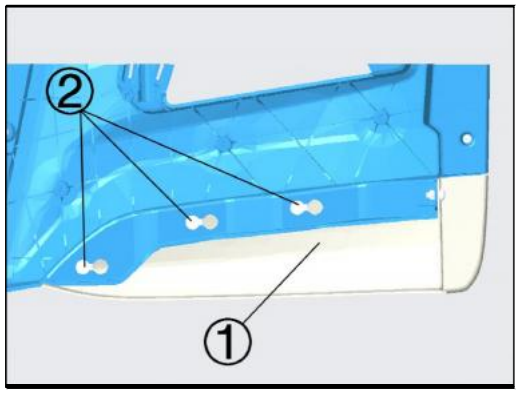

1. Install the lower trim panel ① at the lower corners of the left and right sides of the bumper, insert the guide rubber plug with the thin side up into the mounting hole, and tighten the M5*25 screw ② with a T25 socket.

Installation of bumper sub-assembly

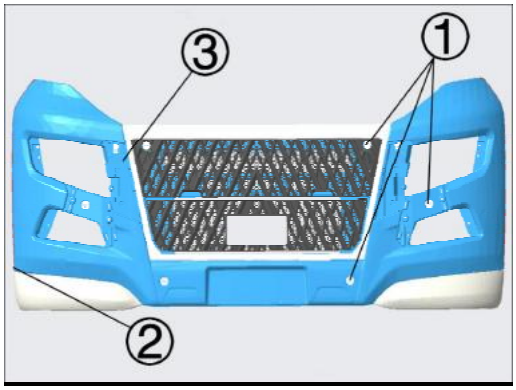

1. Connect the bumper sub-assembly ③ to the bumper bracket, and tighten the M12 hexagon nut and the special gasket ① with a 17mm socket to 120±10Nm.

2. Connect the side of the bumper to the bumper bracket, and use a cross head screwdriver to tighten the M8*25 cross recessed pan head screw ② to 23±2Nm.

Install the bumper headlamp trim panel

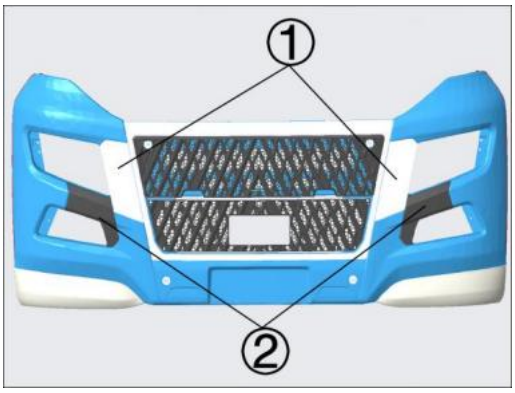

1. Install the bumper headlamp cover ① and bumper headlamp trim panel ② on the bumper, and clamp the mounting bayonet in place.

Install the cap

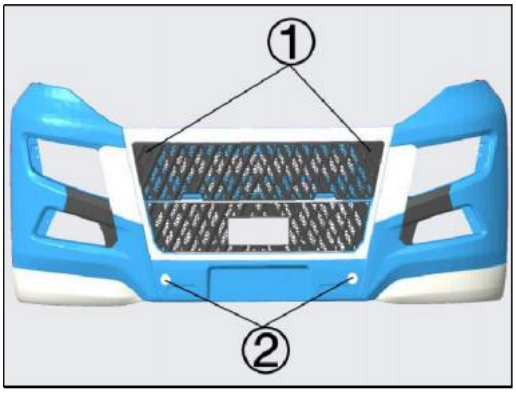

1. Install the bumper left and right caps ① into the bolt mounting holes of the upper trim panel, and install the trim cap ② into the bolt mounting holes at the lower part of the bumper.

Note: When installing the cap, pay attention to distinguishing the color of the cap and matching it with the bumper in a unified manner.

Pedal

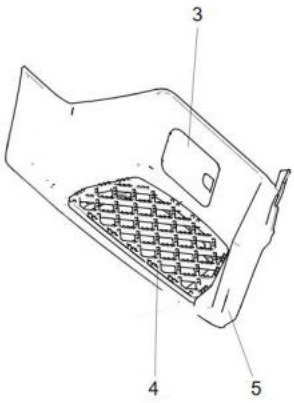

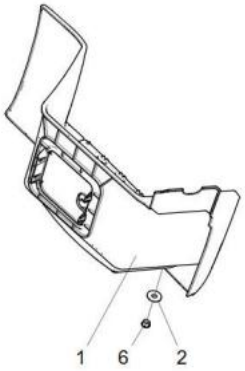

1. Left pedal 2. Large washer 3. Pedal cap 4. Pedal skid plate 5. Right boarding pedal 6. Hexagon flange nut M8

Remove the pedal cap

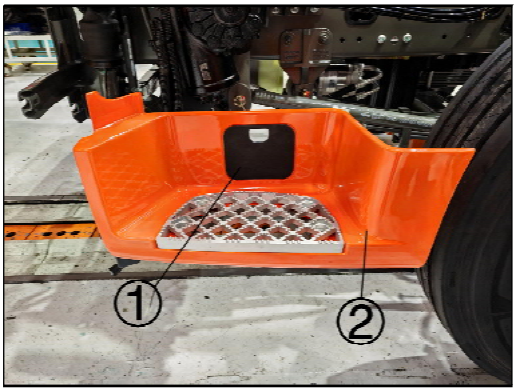

Removal steps

1. Remove the two M6*25 hexagon flange bolts with an 8mm socket wrench, and remove the pedal cap ① from the pedal frame ②.

Remove the pedal skid plate

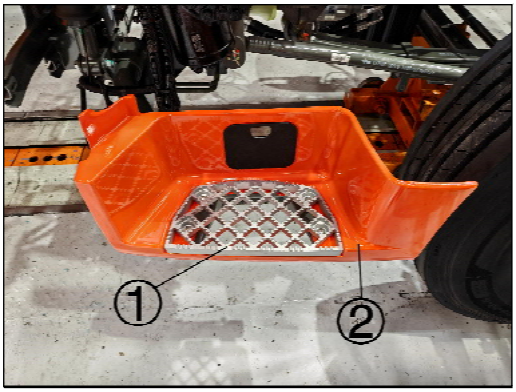

1. Remove the four M8 hexagon flange nuts and M8 large washers from the bottom of pedal frame ② with a 13mm socket wrench, and take out the pedal skid plate ①.

Remove the boarding pedal



1. Remove the boarding pedal from the pedal bracket.

Install the boarding pedal



Installation steps

1. Install the boarding pedal on the pedal bracket.

Install the pedal skid plate

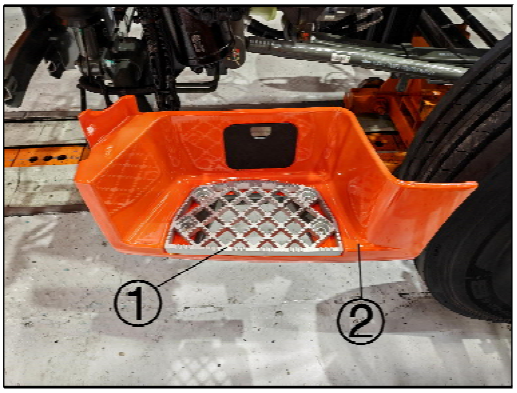

1. Install the pedal skid plate ① on the boarding pedal ②, and tighten the M8 hexagon flange nut and M8 large washer at the bottom to 22±2Nm with a 13mm socket wrench.

Install the pedal cap

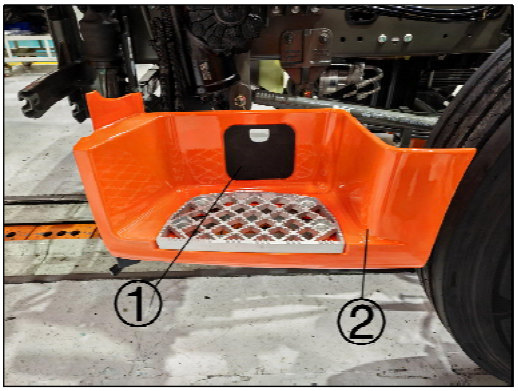

1. Install the pedal cap ① into the mounting frame of the boarding pedal ②, with the lower part clamped into the mounting hole and the upper part clamped into the frame.
2. Tighten the two M6*25 hexagon flange bolts with an 8mm socket wrench.

Pedal bracket

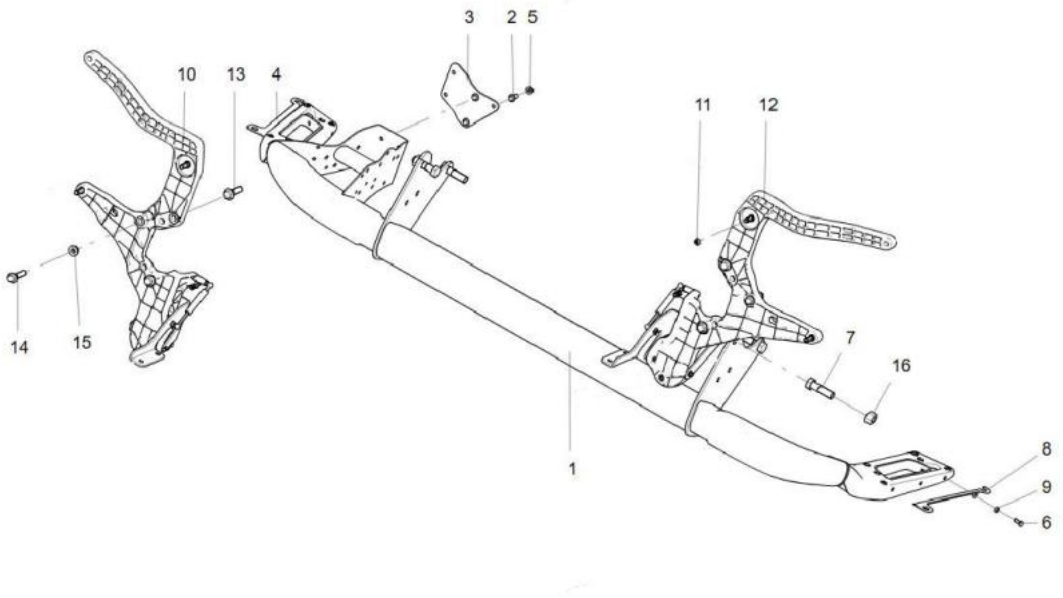

1. Pedal bracket assembly 2. Hexagon flange bolt M10 3. Lift pump mounting bracket 4. Right connecting plate 5. Hexagon flange nut M10 6. Hexagon head bolt M8 7. Hexagon head bolt M20*1.5 8. Left connecting plate 9. Type-2 hexagon nut M8 10. Bumper right bracket assembly 11. Hexagon flange nut (M8) 12. Bumper left bracket assembly 13. Hexagon flange serrated bolt (M16*1.5) 14. Hexagon flange serrated bolt (M14*1.5) 15. Hexagon flange serrated nut M14*1.5 16. Type-2 hexagon nut M20*1.5

Remove the connecting plate

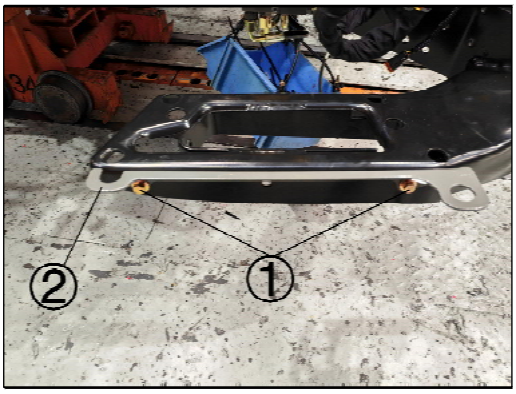

Removal steps

1. Remove the M8*25 hexagon flange bolt ① with a 10mm socket, and take out the connecting plate ②.

Remove the lift pump mounting bracket

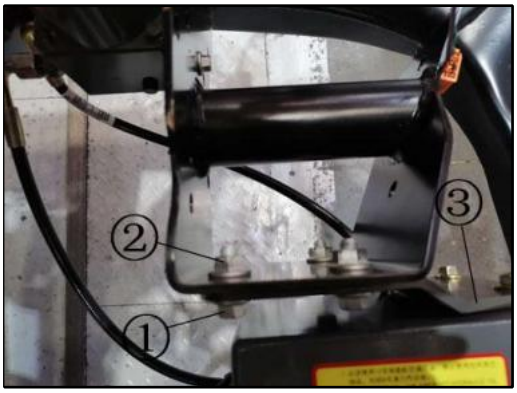

1. Use a 13mm socket wrench to remove the four M10*30 hexagon flange bolts ①, M10 hexagon flange nuts ② and lift pump mounting bracket ③.

Remove the pedal bracket

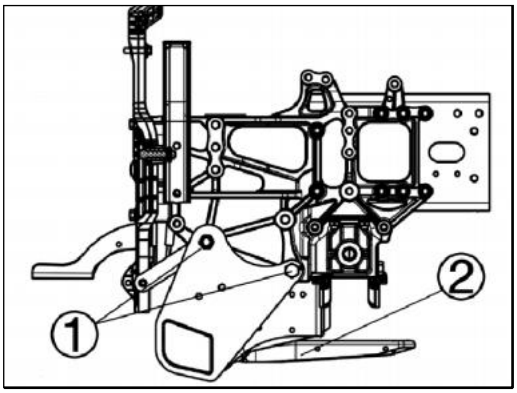

1. Remove the M20*70 hexagon head bolt ① with a 30mm socket wrench, and take out the pedal bracket ②.

Remove the bumper bracket

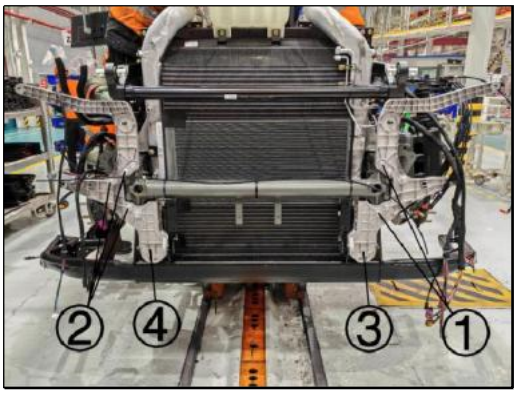

1. Remove four M16*70 hexagon flange serrated bolts ① with a 21mm socket wrench, and remove six M14*70 hexagonal flange serrated bolts ② with a 19mm socket wrench. Take out the bumper left bracket assembly ③ and the bumper right bracket assembly ④.

Install the bumper bracket

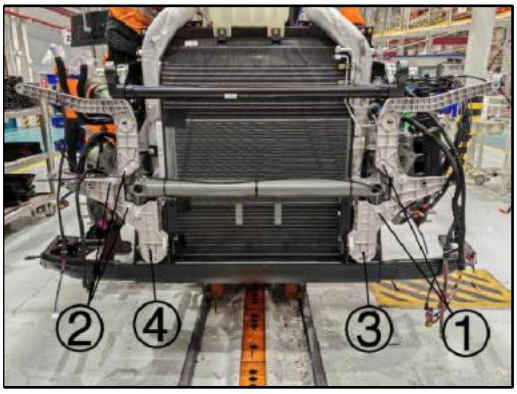

Installation steps

1. Install the bumper left bracket assembly ③ and the bumper right bracket assembly ④ at the front end of the frame, and use a 21mm socket wrench to tighten the M16*70 hexagon flange serrated bolt ① to 300±30Nm.

2. Use a 19mm socket wrench to tighten the M14*70 hexagon flange serrated bolt ② to 200 ±20Nm.

Install the pedal bracket

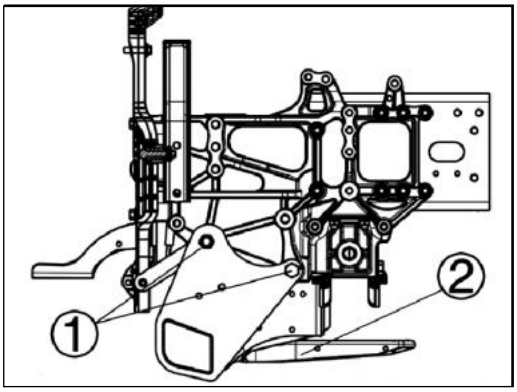

Installation steps

1. Install the pedal bracket at the front end of the frame, and use a 30mm socket wrench to tighten the M20*70 hexagon head bolt and M20 hexagon head nut to 540±54Nm.

Install the lift pump bracket

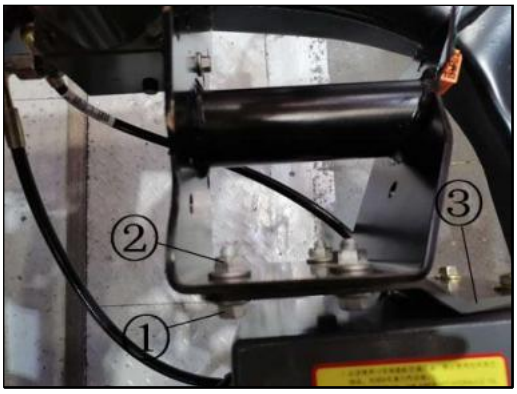

1. Install the lift pump bracket ③ on the pedal bracket, and use a 13mm socket wrench to tighten the M10*30 hexagon flange bolt ① and M10 hexagon flange nut ② to 35±3.5Nm.

Install the connecting plate

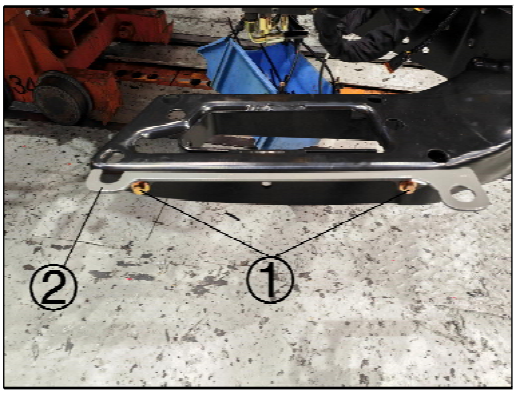

1. Install the connecting plate ② at both ends of the pedal bracket, and use a 10mm socket wrench to tighten the M8*25 hexagon head bolt ① to 22 ±2Nm.

Fender

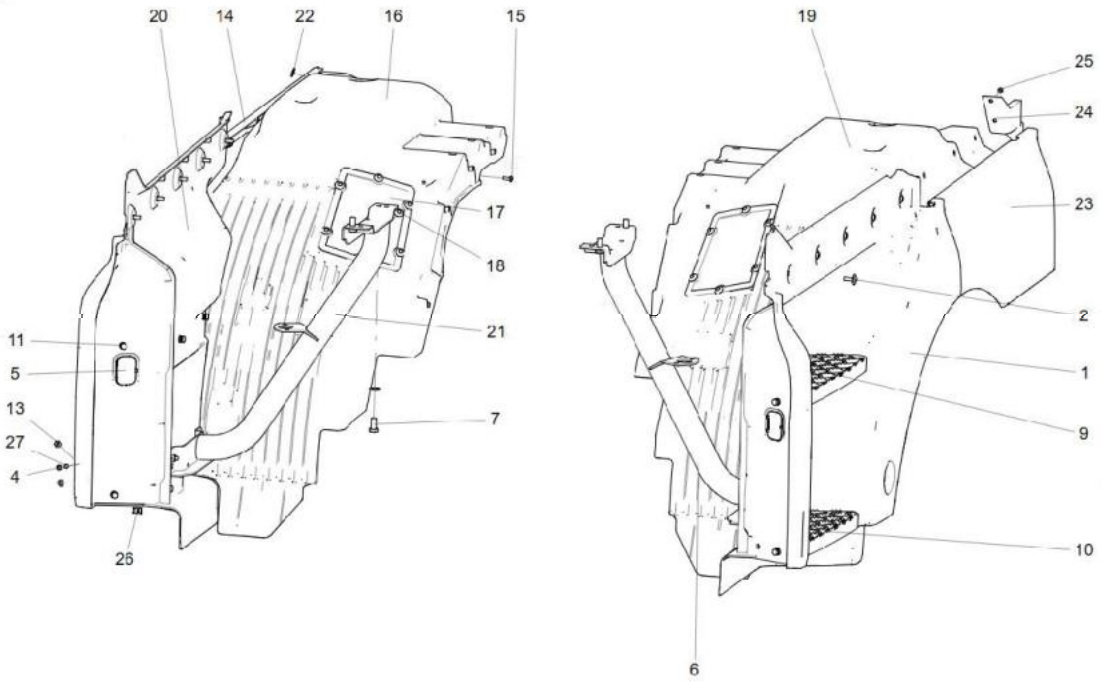

1. Left fender front section 2. Hexagon socket pattern round head bolt 3. Blanking cover 4. Left fender bracket assembly 5. Skid plate I 6. Skid plates II 7. Flange bolt 8. Flange nut 9. Left fender extension plate 10. Right fender extension plate 11. Right mudguard 12. Right fender bracket assembly 13. Bracket 14. Pan head screw 15. Left mudguard 16. Cap 17. Right fender front end

Remove the mudguard

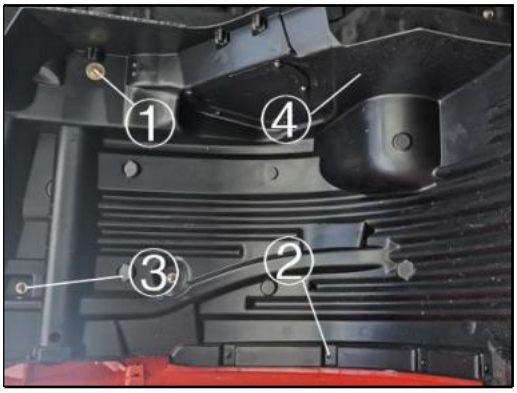

Removal steps

1. Remove the M12*25 hexagon head bolt ① with a 19mm socket wrench.
2. Remove the five M4.8*22 cross recessed pan head tapping screws ② with a cross head screwdriver.
3. Remove the two elastic retainer rings ③ with a rocker.
4. Take out the mudguard ④.

Remove the fender reinforcement plate

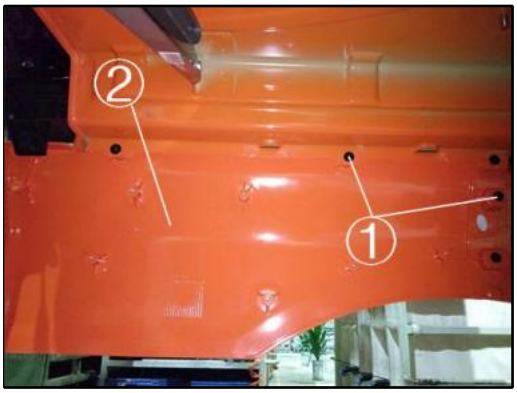

1. Remove the six M6*20 cross recessed pan head screws ① with a cross head screwdriver.
2. Take out the fender reinforcement plate ②.

Remove the fender front section

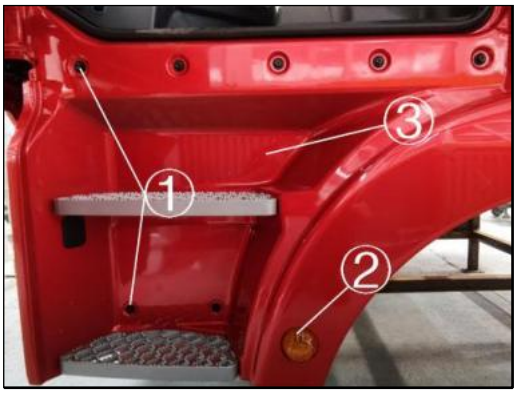

1. Remove the seven M8*25 hexagon socket head screws ① with a T40 socket.
2. Remove the back connector of side turn signal lamp ②.
3. Take out the fender front section ③.

Remove the fender bracket

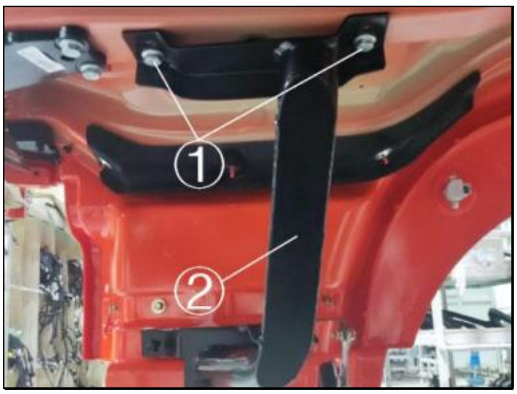

1. Remove the M12*25 hexagon flange bolt ① with a 17mm socket wrench.
2. Take out the fender bracket ②.

Install the fender bracket

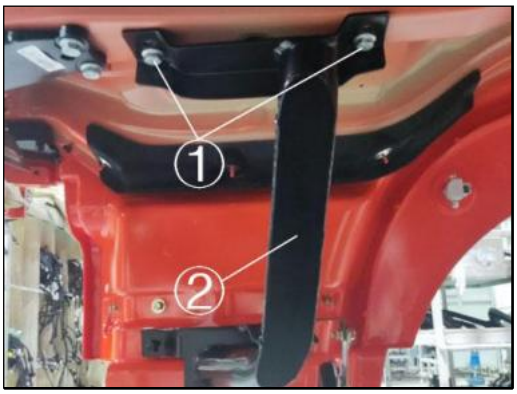

Installation steps

1. Install the fender bracket ② on the bottom side member of the cab body.
2. Use a 17mm socket wrench to tighten the M12*25 hexagon flange bolt ① to 75±7.5Nm.

Note: Re-tighten the bolts with a torque wrench after tightening.

Install the fender front section

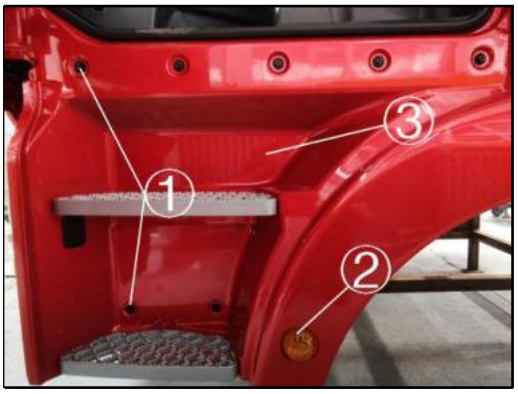

1. Install the fender front section ③ on the cab body.
2. Tighten the M8*25 hexalobular socket head cap screw ① to 16±0.6Nm with a T40 socket.
3. Connect the back harness of the side turn signal lamp ②.

Note: Pay attention to the torque requirements when tightening the fender fixing bolts. Excessive tightening torque will cause deformation and fracture of the workpiece.

Install the fender reinforcement plate

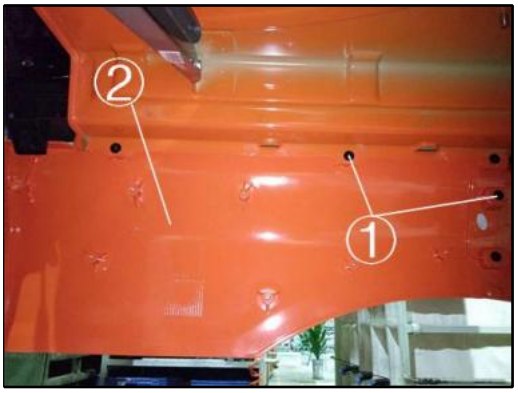

1. Install the fender reinforcement plate ② on the cab body and connect it with the fender front section.
2. Use a cross head screwdriver to tighten the M6*20 cross recessed pan head screw ① to 6 ±0.6Nm.

Install the mudguard

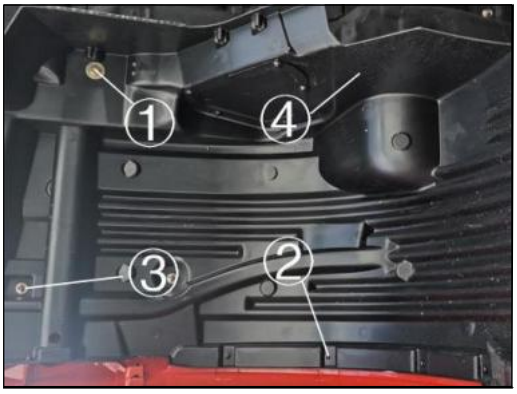

1. Clamp the mudguard ④ mounting hole into the clamping stud position at the bottom of the cab body.
2. Tighten the M12*25 hexagon head assembling bolt with a 19mm socket wrench.
3. Use a cross head screwdriver M4.8*22 cross recessed pan head tapping screw ② to fasten the mudguard ④ and the fender front section together.
4. Clamp the mudguard ④ to the cab body with the elastic retainer ring ③.

Note: The elastic retainer ring is a disposable part.

Rear fender

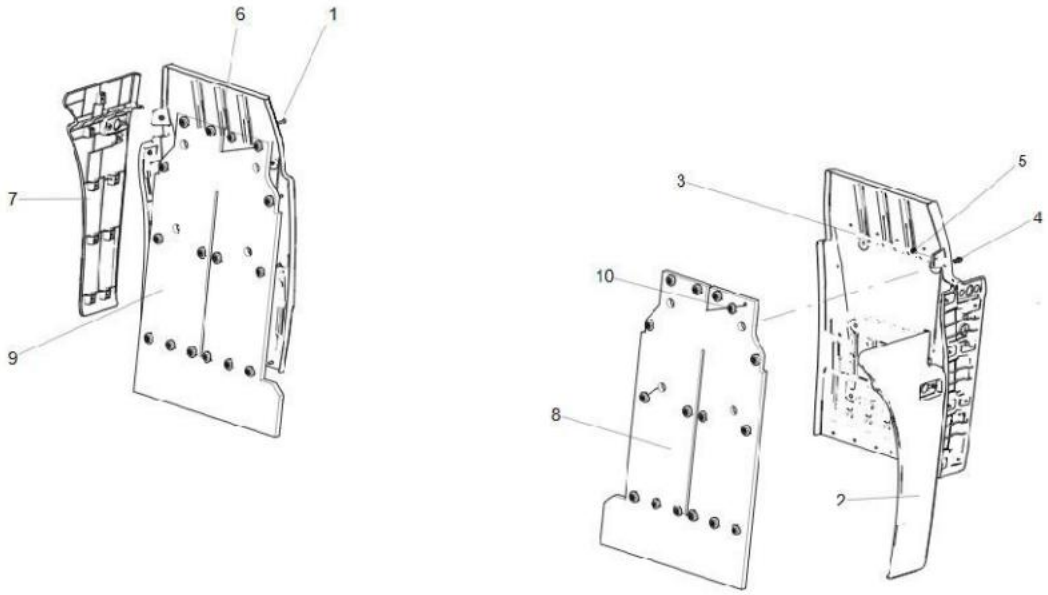

1. Cross recessed pan head tapping screw ① 2. Left rear fender side plate 3. Left rear fener 4. Hexagon flange bolt 5. Cross recessed pan head screw 6. Right rear fender 7. Right rear fender side panel 8. Left inner mudguard 9. Right inner mudguard 10. Special nut

Remove the rear fender sub-assembly

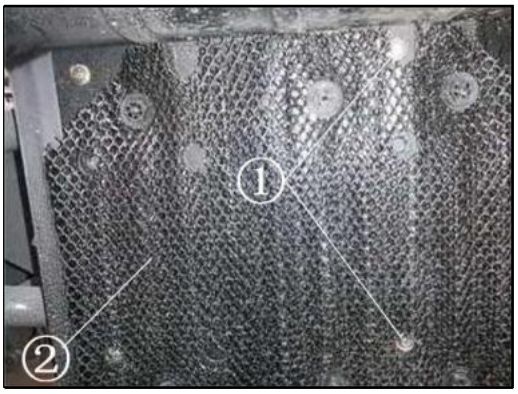

Removal steps

1. Remove the M8*25 hexagon flange bolt ① with a 10mm socket, and take out the rear fender sub-assembly ②.

Remove the rear fender side panel

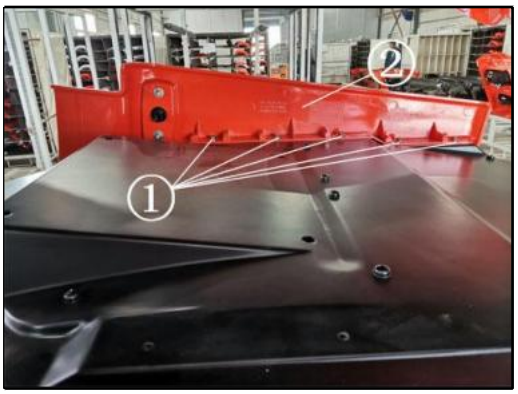

1. Remove the M6*20 cross recessed pan head screw ① with a cross head screwdriver, and take out the rear fender side panel ②.

Remove the inner mudguard



1. Remove the sixteen M6*25 cross recessed pan head tapping screws ① with a cross head screwdriver, and take out the inner mudguard ②.

Remove the rear fender bracket assembly

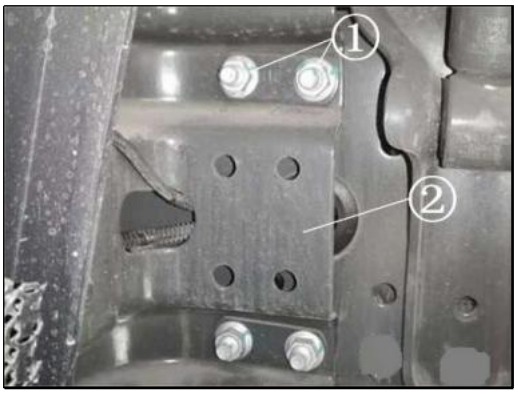

1. Remove the M14 hexagon flange serrated nut ① with a 19mm socket wrench, and take out the rear fender bracket assembly ②.

Install the rear fender bracket assembly

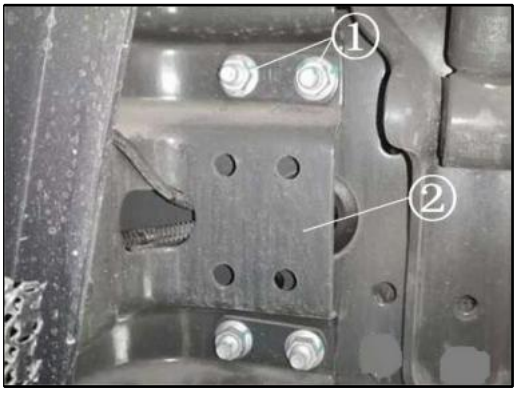

Installation steps

1. Install the rear fender bracket assembly ② on the frame pre-threaded mounting bolts, and tighten the M14 hexagon flange serrated nut ① with a 19mm socket wrench to 200±20Nm.

Install the inner mudguard



1. Install the inner mudguard ② and the rear fender ③ together, and tighten the M6*25 cross recessed pan head tapping screw ① and the special nut with a cross head screwdriver.

Install the rear fender side panel

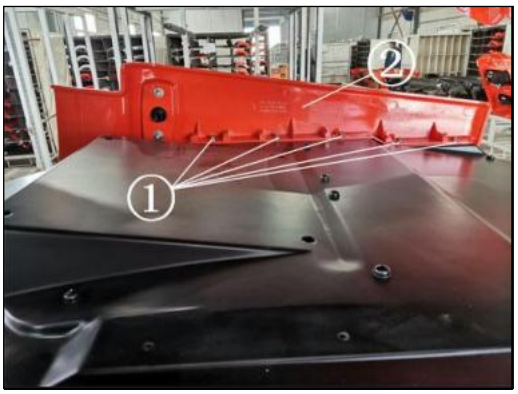

1. Install the rear fender side panel ② on the edge of the rear fender, and use a cross head screwdriver to tighten the M6*20 cross recessed pan head screw ① to 7±0.5Nm.

Install the rear fender sub-assembly

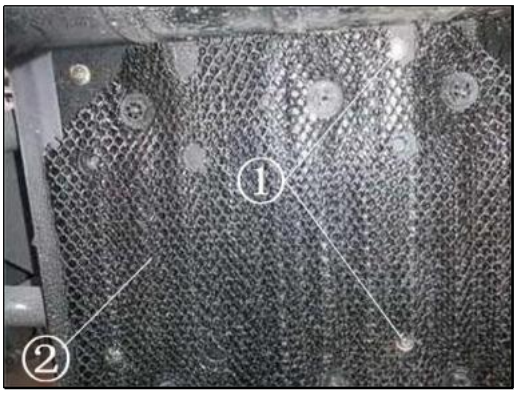

1. Install the rear fender sub-assembly ② on the rear fender bracket assembly, and use a 10mm socket wrench to tighten the M8*25 hexagon flange bolt ① to 20±2Nm.

C7 Intake system

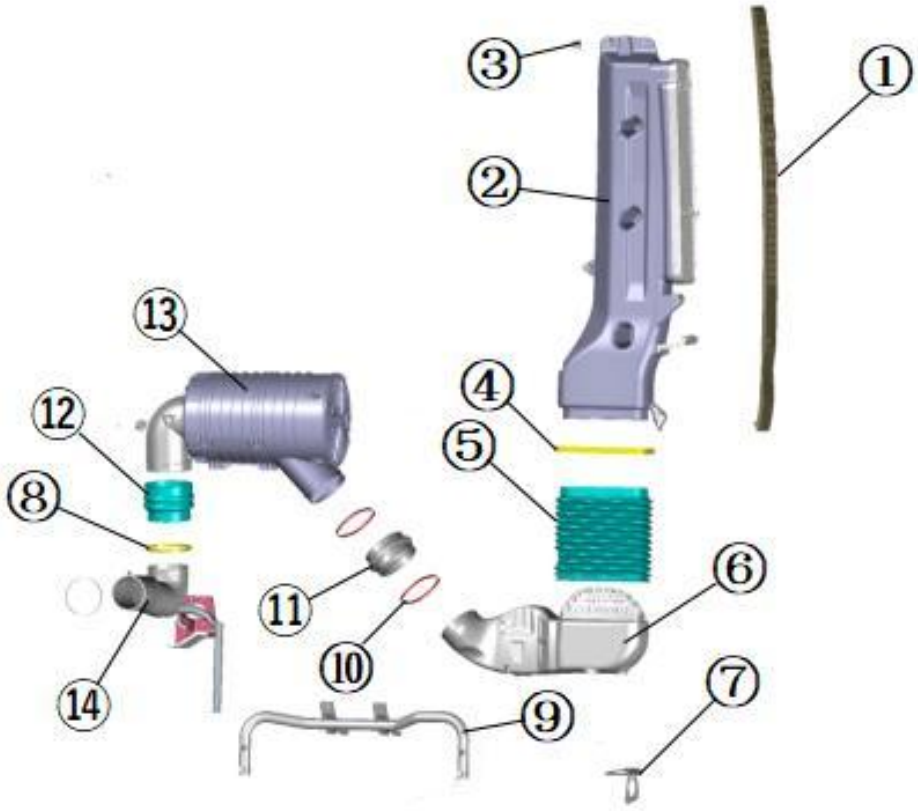

1. Trim panel assembly 2. Inlet channel assembly 3. Rubber metal pad 4. Hose clamp 5. Inlet channel bellows assembly 6. Lower inlet channel assembly 7. Bracket assembly 8. Hose clamp 9. Air filter bracket assembly 10. Hose clamp 11. Corrugated connecting pipe 12. Connecting hose 13. Air filter assembly 14. Turbocharger intake pipe

Remove the trim panel assembly

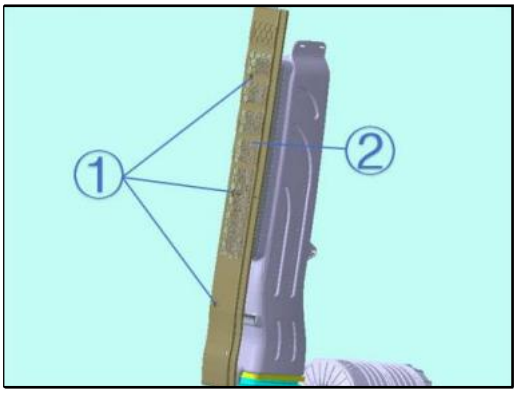

Removal steps

1. Remove the M6*20 cross recessed pan head screw ① with a cross head screwdriver, and take out the trim panel assembly ②.

Remove the inlet channel hose assembly

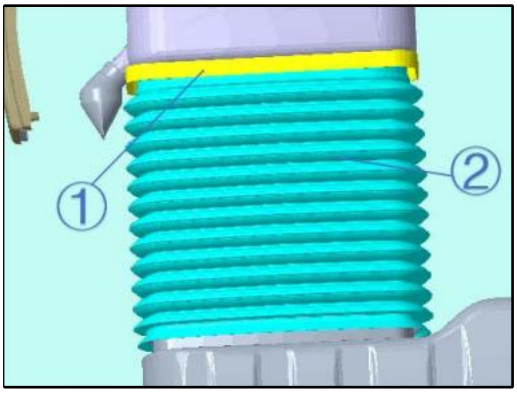

1. Remove the hose clamp ① with a 7mm socket, and take out the inlet channel hose assembly ②.

Remove the inlet channel assembly

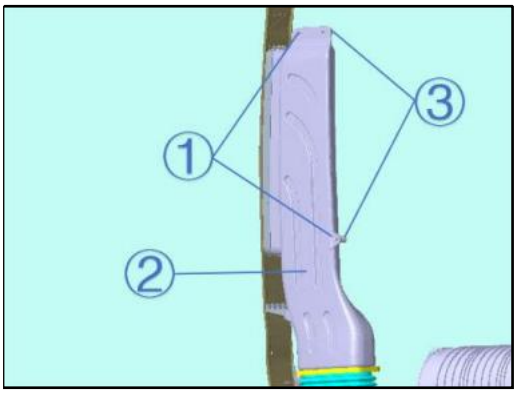

1. Remove the M8 hexagon flange nut ① with a 13mm socket wrench, and take out the inlet channel assembly ②.
2. Remove the rubber metal pad ③.

Remove the lower inlet channel assembly

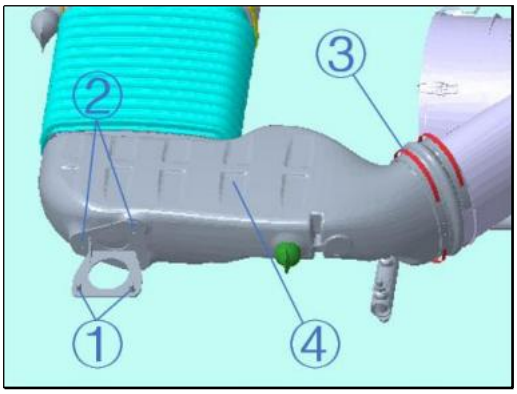

1. Remove the M10*25 hexagon flange bolt ① with a 13mm socket, and remove the M8*16 hexagon flange bolt ② with a 10mm socket.
2. Remove the hose clamp ③ with a 7mm socket.
3. Remove the lower inlet channel assembly ④.

Remove the corrugated connecting pipe

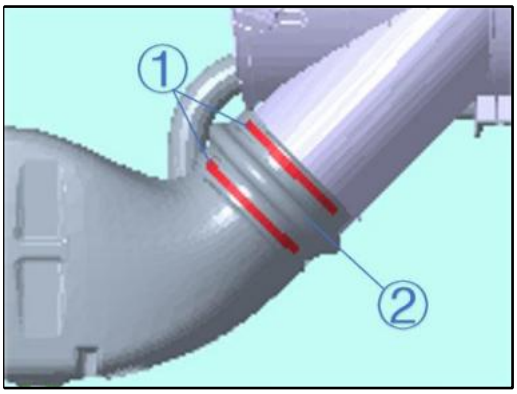

1. Remove the hose clamp ① with a 7mm socket, and remove the corrugated connecting pipe ②.

Remove the air filter assembly

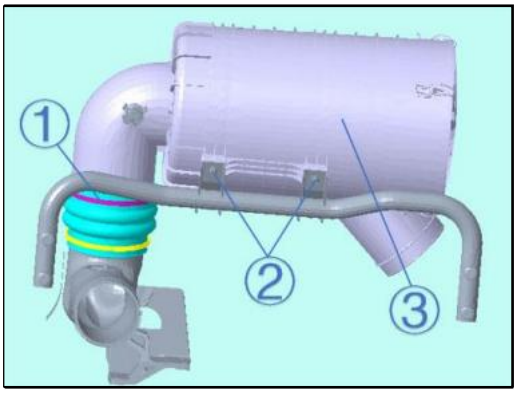

1. Remove the hose clamp ① with a 7mm socket.
2. Remove the four M10*25 hexagon flange bolts ② with a 13mm socket wrench, and take out the air filter assembly ③.

Remove the connecting hose

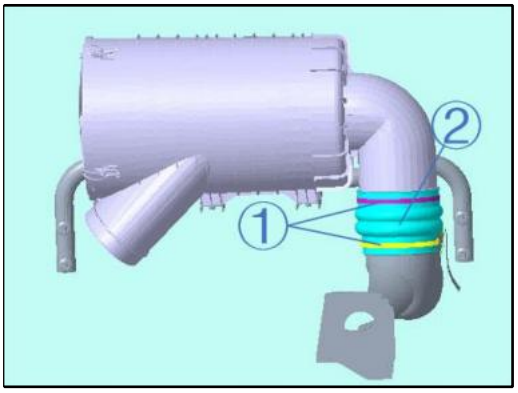

1. Remove the hose clamp ① with a 7mm socket, and take out the connecting hose ②.

Remove the turbocharger air inlet pipe

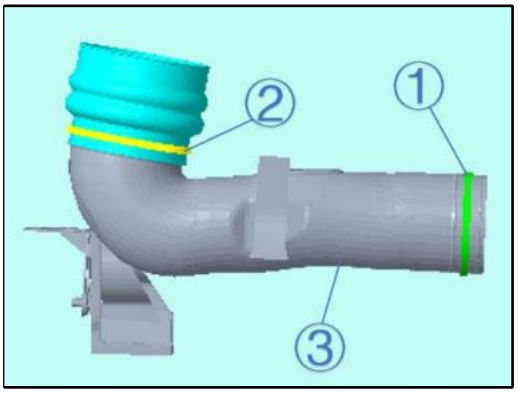

1. Remove the hose clamp ① and hose clamp ② with a 7mm socket.
2. Remove the turbocharger intake pipe ③.

Install the turbocharger air inlet pipe

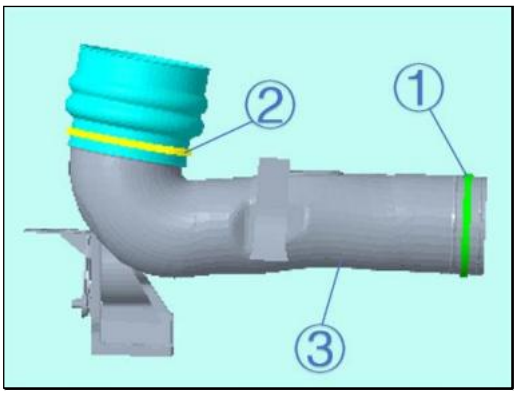

Installation steps

1. Connect the turbocharger intake pipe ③ to the engine end air hose, and tighten the hose clamp ① with a 7mm socket.

2. Connect the other end of the turbocharger intake pipe ③ to the connecting hose, and tighten the hose clamp ② with a 7mm socket.

Install the connecting hose

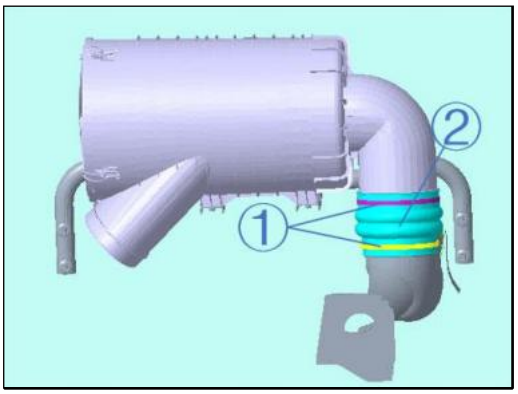

1. Connect the upper end of the connecting hose ② to the air outlet end of the air filter assembly, and tighten the hose clamp ① with a 7mm socket.

Install the air filter assembly

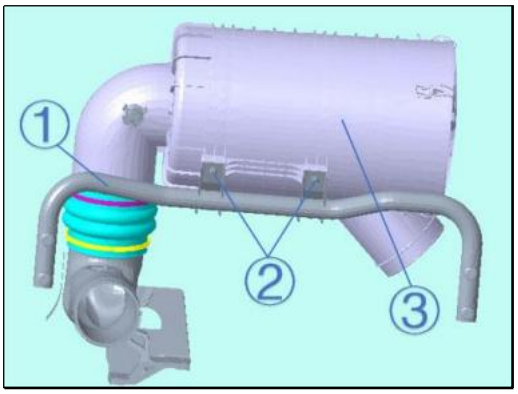

1. Install the air filter assembly ③ onto the air filter bracket assembly ①.
2. Use a 13mm socket wrench to tighten the M10*25 hexagon flange bolt ② to 45±5Nm.

Installation of corrugated connecting pipe

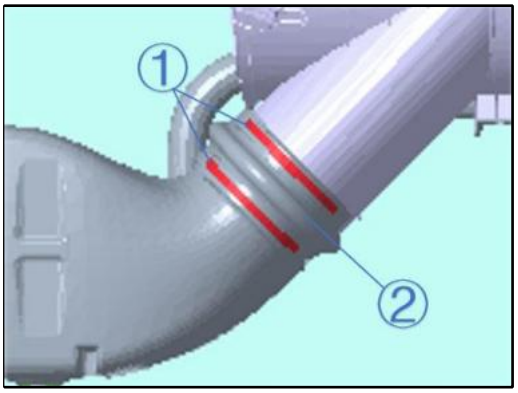

1. Install the corrugated connecting pipe ② to the intake end of the air filter assembly, and tighten the hose clamp ① with a 7mm socket.

Install the intake pipe connecting bracket

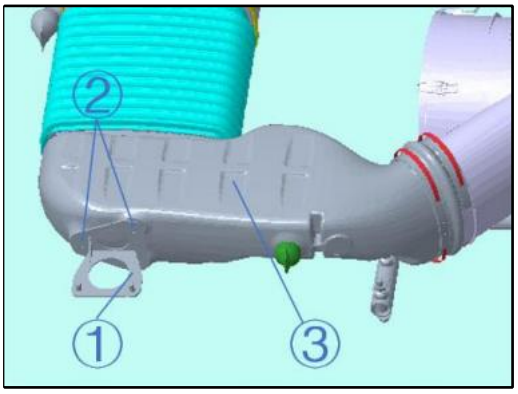

1. Install the intake pipe connecting bracket ① to the left bottom of the lower inlet channel assembly ③, and use a 10mm socket wrench to tighten the M8*16 hexagon flange bolt ② to 24 ±2Nm.

Install the lower inlet channel assembly

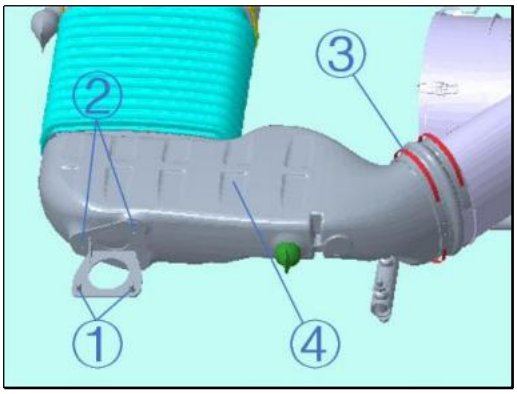

1. Connect the air outlet end of the lower inlet channel ④ to the corrugated connecting pipe, and tighten the hose clamp ③ with a 7mm socket.
2. Install the intake pipe connecting bracket on the frame end, and use a 13mm socket wrench to tighten the M10*25 hexagon flange bolt ① to 45 ±5Nm.

Install the inlet channel assembly

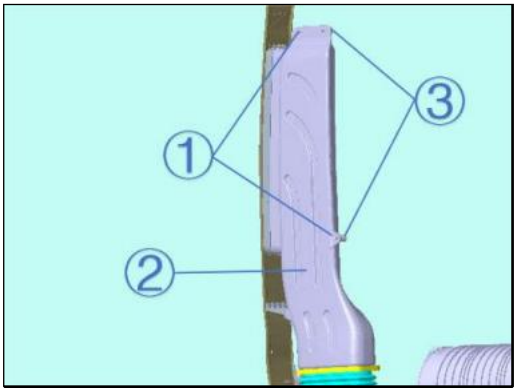

1. Install the rubber metal pad ③ on the rear wall of the cab.
2. Install the inlet channel ② assembly on the rubber metal pad ③, and use a 13mm socket wrench to tighten the M8 hexagon flange nut ① to 24±2Nm.

Install the inlet channel hose assembly

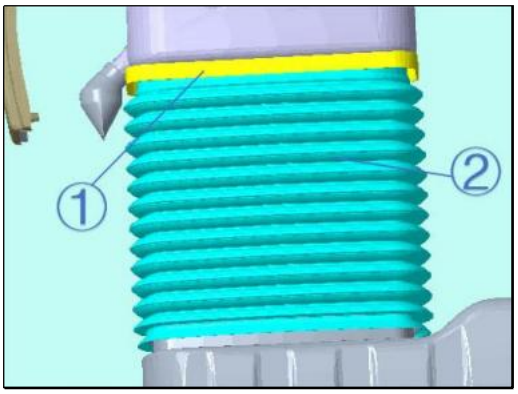

1. Install the inlet channel hose assembly ② at the lower end of the upper inlet channel assembly, and tighten the hose clamp ① with a 7mm socket.

Install the trim panel assembly

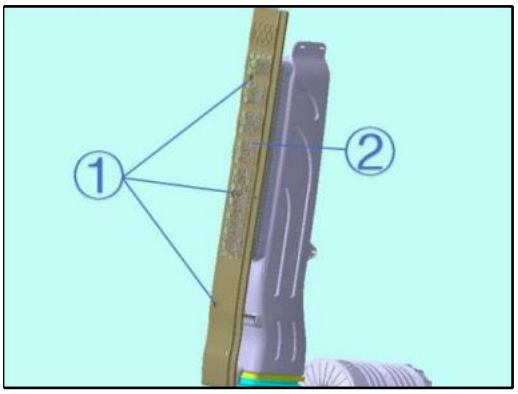

1. Install the trim panel assembly ② on the left side of the inlet channel assembly, and use a cross head screwdriver to tighten the M6*20 cross recessed pan head screw ① to 9±1Nm.

Note: Visual inspection must be carried out before line assembly to ensure that the line is free of sundries, foreign matters, cracks and leakage points. After assembly, check whether the pipe orifice is deformed.

Sun canopy

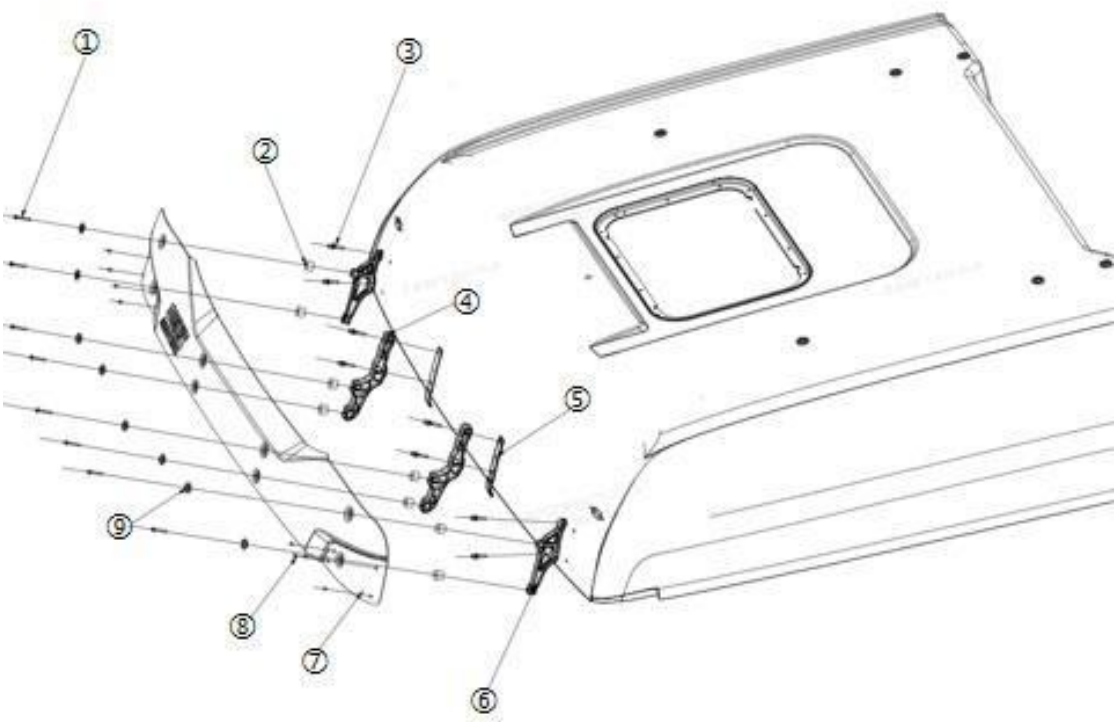

1. Cross recessed pan head screw 2. Cushion block 3. Hexagon socket head cap screw 4. Middle bracket 5. Front windshield pressure plate 6. Outer bracket 7. Sun canopy assembly 8. Sleeve 9. Bushing

Remove the front outline marker lamp

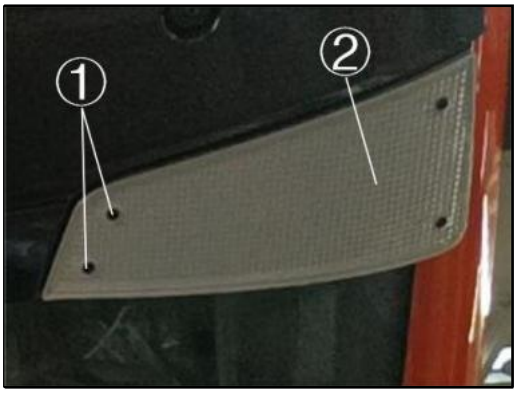

Removal steps

1. Remove the M5*25 cross recessed pan head screw ① with a cross head screwdriver, and take out the front outline marker lamp ②.

Remove the sun canopy

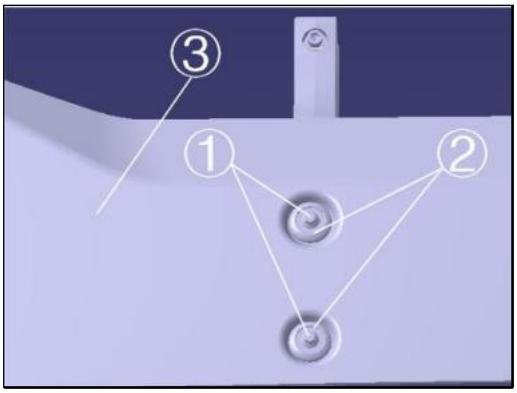

1. Remove the eight M6*45 cross recessed pan head screws ① with a cross head screwdriver, and take out the bushing and cushion block ②.
2. Remove the sun canopy ③.

Remove the outer bracket

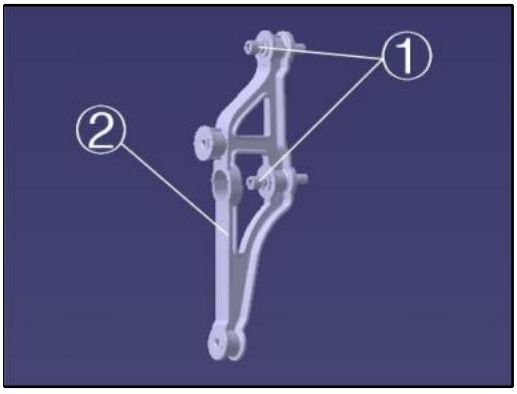

1. Remove the M8*40 hexagon socket head cap bolt ① with a T40 socket wrench, and remove the outer bracket ②.

Remove the middle bracket

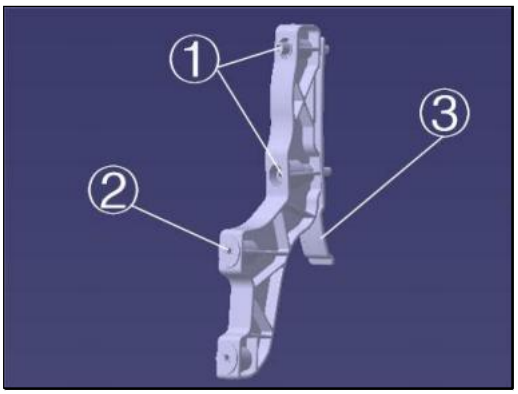

1. Remove the M8*40 hexagon socket head cap bolt ① with a T40 socket wrench.
2. Remove the middle bracket ② and the windshield pressure plate ③.

Install the middle bracket

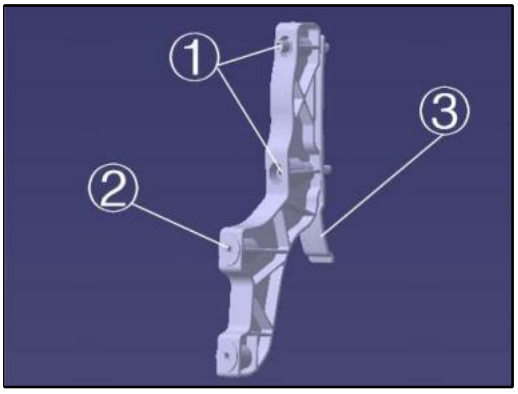

Installation steps

1. Install the middle bracket ② and the windshield pressure plate ③ at the outer front end of the top cover.
2. Use a T40 socket wrench to tighten the M8*40 hexagon socket head cap bolt ① to 14±1.4Nm.

Install the outer bracket

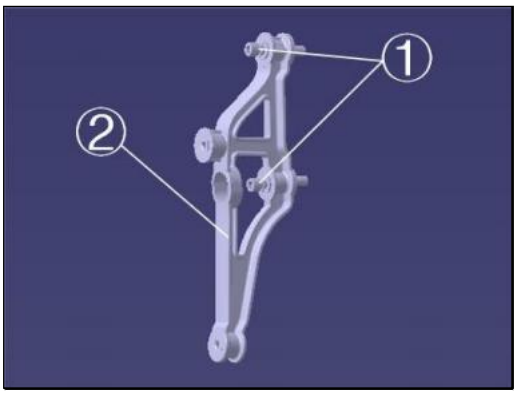

1. Install the outer bracket ② at the outer front end of the top cover.
2. Use a T40 socket wrench to tighten the M8*40 hexagon socket head cap bolt ① to 14±1.4Nm.

Install the sun canopy

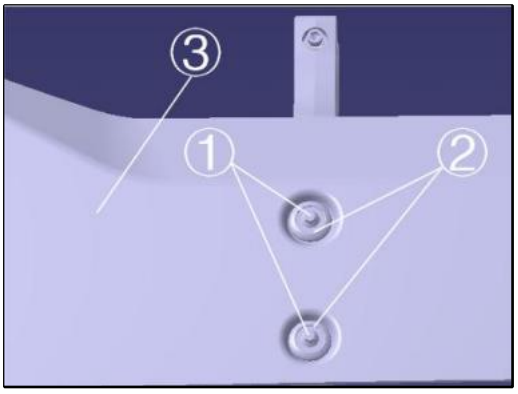

1. Sub-assemble the bushing and cushion block ② to the sun canopy.
2. Install the sub-assembled sun canopy ③ onto the sunshade bracket.
3. Use a cross head screwdriver to tighten the M6*45 cross recessed pan head screw ① to 4.5 ±0.45Nm.

Install the front outline marker lamp

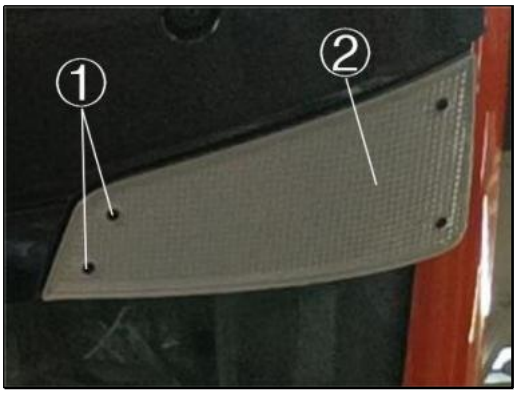

1. Install the front outline marker lamp ② on both sides of the sun canopy, and use a cross head screwdriver to tighten the M5*25 cross recessed pan head screw ① to 5±0.5Nm.

A-pillar trim panel

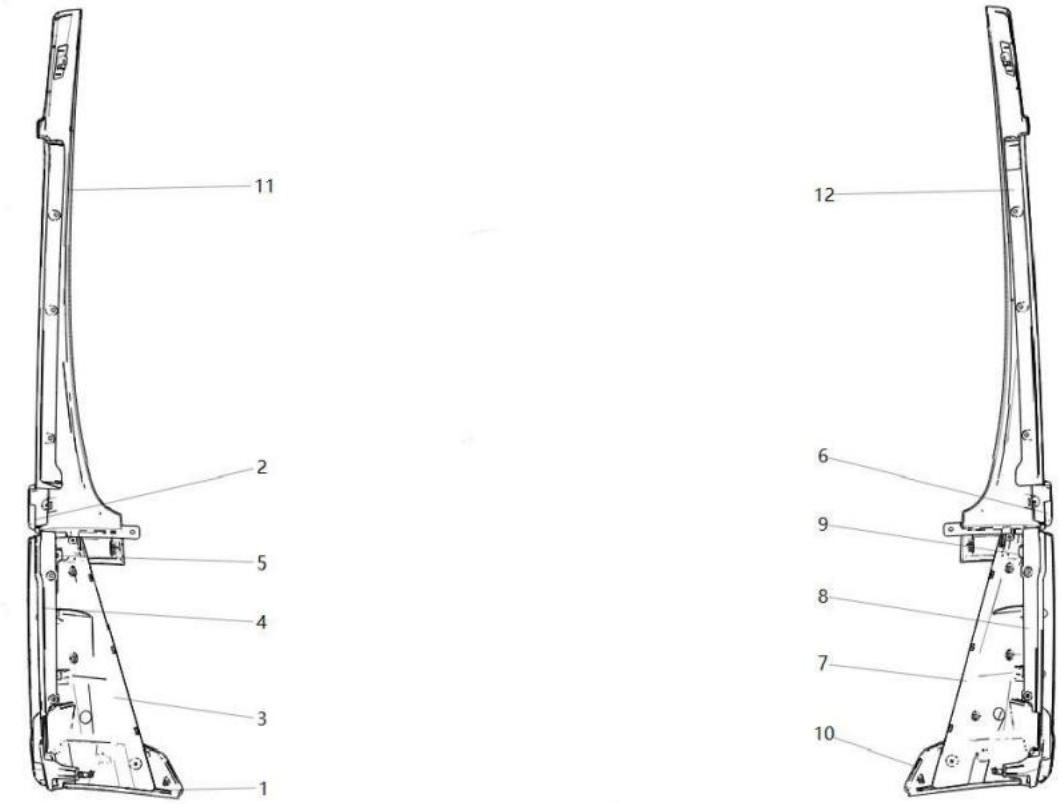

1. Left air hood outer panel 2. Left door hinge cover 3. Left air hood inner panel 4. Left trim panel 5. Left trim panel bracket 6. Right door hinge cover 7. Right air hood inner panel 8. Right trim panel 9. Right trim panel bracket 10. Right air hood outer panel 11. Left A-pillar outer trim panel 12. Right A-pillar exterior trim panel

Remove the air hood assembly

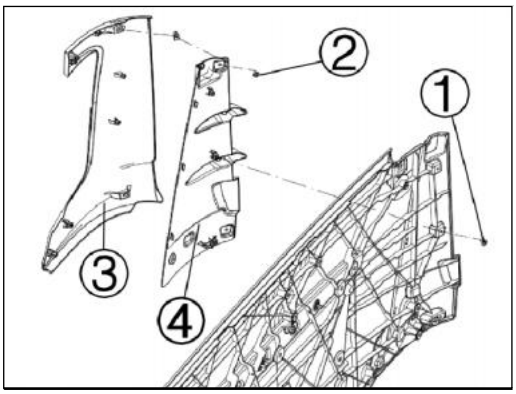

Removal steps

1. Remove five M4.8*19 cross recessed pan head tapping screws ① with a cross head screwdriver, and take out the air hood assembly ③.

2. Remove the six M4.8*19 cross recessed pan head tapping screws ② with a cross head screwdriver, and take out the inner panel of the air hood.

Remove the door hinge cover

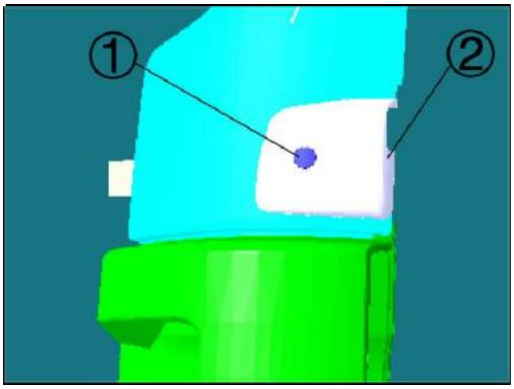

1. Remove the cap ① with a rocker.

2. Remove the M4.8*16 cross recessed pan head tapping screws with a cross head screwdriver, and take out the door hinge cover ②.

Remove the A-pillar exterior trim panel

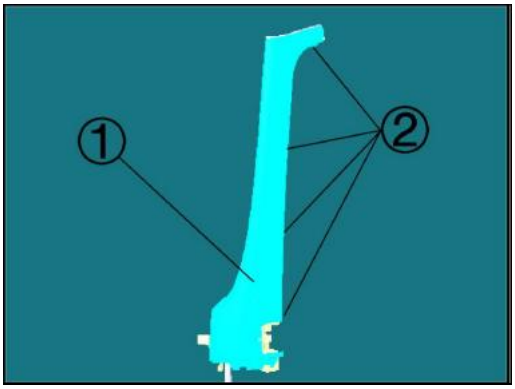

1. Remove the five M4.8*19 cross recessed pan head tapping screws ② with a cross head screwdriver, and take out the A-pillar exterior trim panel assembly ①.

Note: The left A-pillar exterior trim panel has a fixing point above the A-pillar in the cab.

Remove the side trim panel

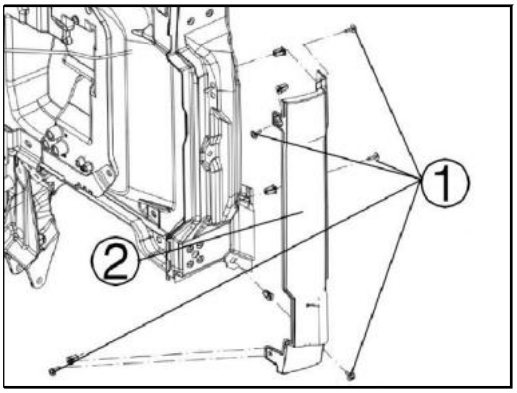

1. Remove the M4.8*19 cross recessed pan head tapping screw ① with a cross head screwdriver, and take out the side trim panel ②.

Remove the trim panel bracket

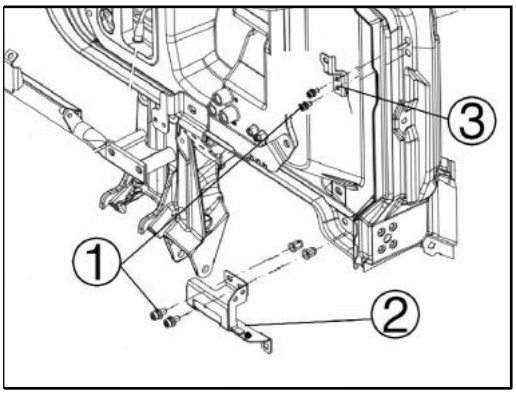

1. Remove the M8*25 hexagon socket head cap screw ① with a T40 socket, and take out the lock bracket ② and trim panel bracket ③.

Install the trim panel bracket

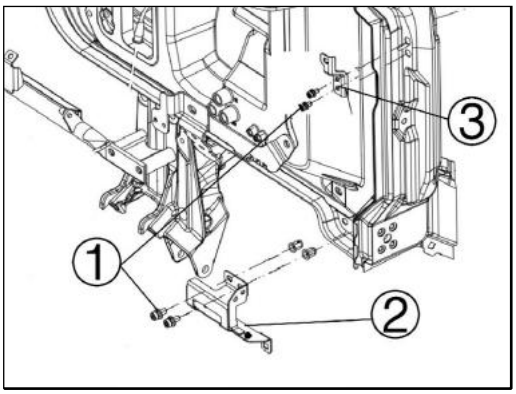

Installation steps

1. Install the trim panel bracket on the body front wall side pillar, and tighten the M8*25 hexagon socket head cap screws with a T40 socket to 20 ±2Nm.

2. Install the lock bracket at the lower part of the body front wall, and tighten the M8*25 hexagon socket head cap screws with a T40 socket to 20 ±2Nm.

Install the A-pillar exterior trim panel

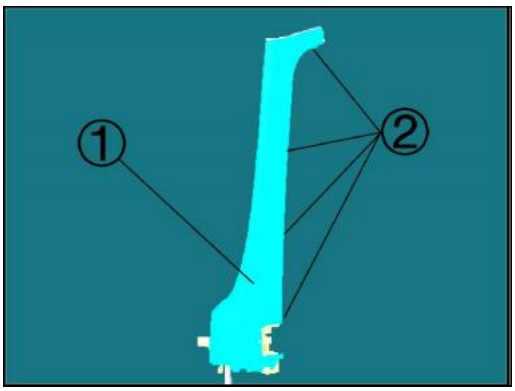

1. Install the A-pillar exterior trim panel ① on the outside of the cab A-pillar, and tighten the M4.8*19 cross recessed pan head tapping screw ② with a cross head screwdriver.

Note: The left A-pillar exterior trim panel has a fixing point on the inside of the cab. Before fixing, apply high-performance neutral silicone adhesive to the fixing hole for sealing.

Install the side trim panel

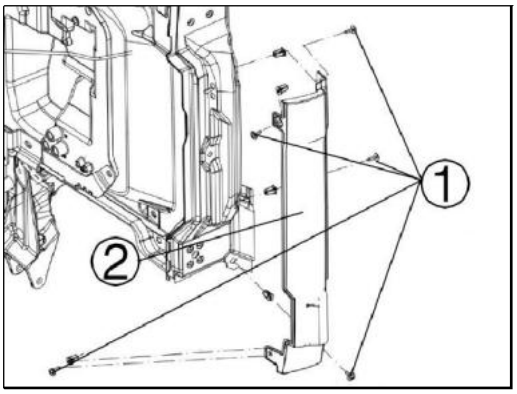

1. Install the side trim panel on the lower outer side of the body A-pillar, and tighten the M4.8*19 cross recessed pan head screws with a cross head screwdriver.

Install the door hinge cover

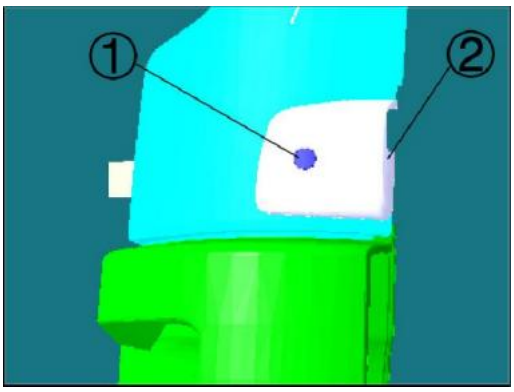

1. Install the door hinge cover ② on the A-pillar exterior trim panel, and tighten the M4.8*16 cross recessed pan head tapping screws with a cross head screwdriver.
2. Install the cap ① into the fixing hole of the door hinge cover ②.

Install the air hood assembly

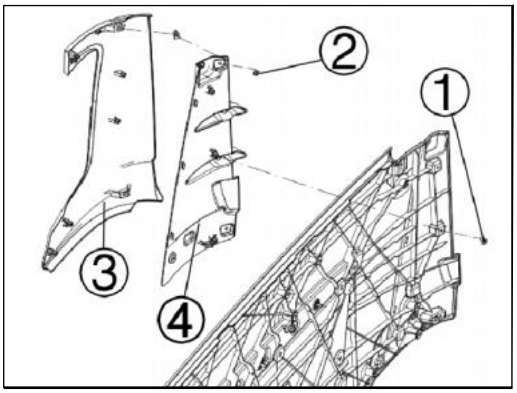

1. Install the air hood inner panel on the air hood outer panel, and tighten the six M4.8*19 cross recessed pan head screws with a cross head screwdriver.
2. Install the air hood assembly on both sides of the front mask, and tighten the five M4.8*19 cross recessed pan head screws with a cross head screwdriver.

Radiator mask

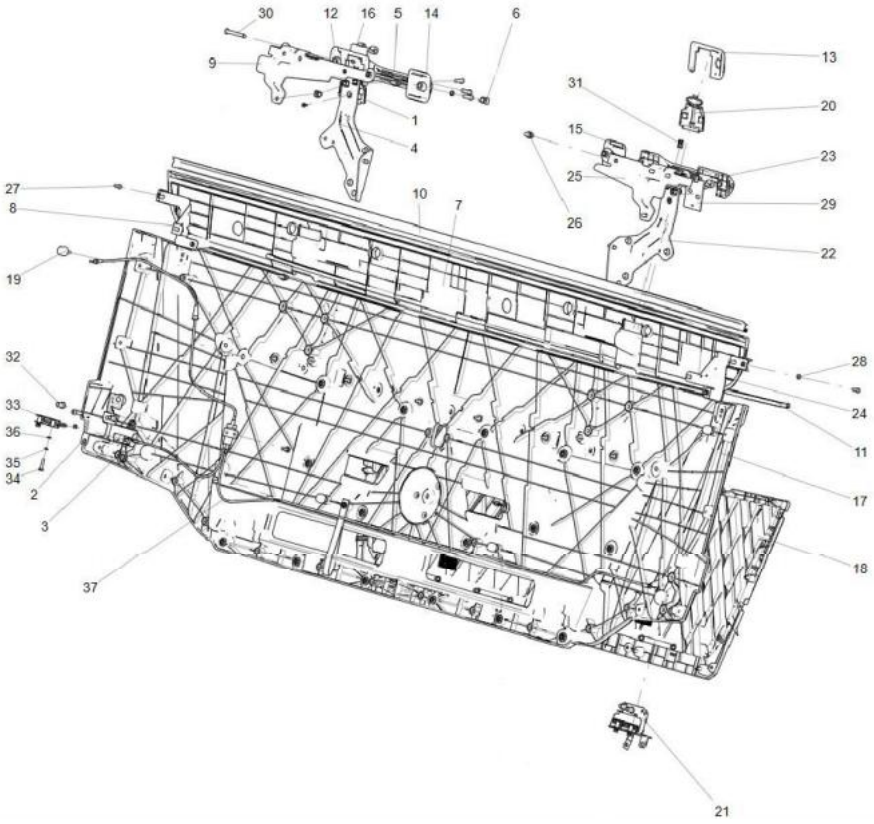

1. Left hinge trim cover 2. Left lock bracket assembly 3. Lock pin 4. Mask left hinge plate 5. Left hinge seat 6. Hinge seat cap 7. Windshield trim panel 8. Left bracket I 9. Left hinge plate assembly 10. Windshield trim plate sealing strip 11. Mask upper sealing strip 12. Left hinge gasket I 13. Right hinge gasket I 14. Left hinge gasket II 15. Right hinge gasket II 16.Mask left hinge backing plate 17. Mask 18. Mask grille 19. Mask limit block 20. Right hinge trim cover 17. Right lock bracket 18. Mask grille 19. Mask limit block 20. Right hinge trim cover 21. Right lock bracket 22. Mask right hinge plate 23. Right hinge seat 24. Right bracket I 25. Right hinge plate assembly 26. Hexagon socket lobular socket head screw 27. Hexalobular socket pan head screw 28. Flat washer 29. Mask right hinged backing plate 30. Hinge pin 31. Elastic retainer ring 32. Blind rivet nut 33. Lock assembly 34. Hexalobular socket head cap screw 35. Spring washer 36. Small washer 37. Lock cable assembly

Remove the hinge seat

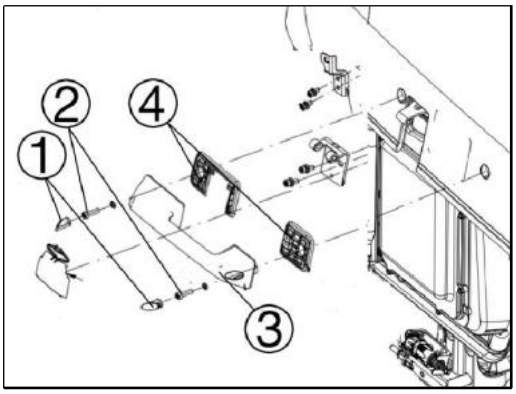

Removal steps

1. Remove the hinge seat cap ① with a rocker.
2. Remove the M8*20 hexagon socket head cap screw ② with a T40 socket, and take out the hinge seat ③ and hinge gasket ④.

Remove the hinge trim cover



1. Remove the M4.2*13 cross recessed pan head screw ① with a cross head screwdriver, and remove the hinge trim cover ② with a rocker.

Note: When removing the gas spring, the mask will fall to avoid injury.

Remove the gas spring



1. Remove the gas spring ① with a rocker.

Remove the radiator mask assembly

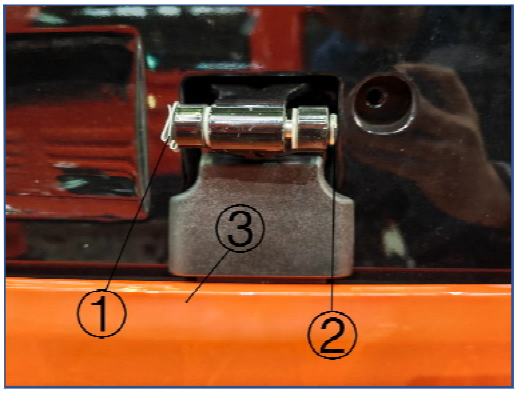

1. Remove the elastic retainer ring ① with needle-nose pliers, remove the hinge pin ②, and take out the radiator mask assembly ③.

Remove the windshield trim panel

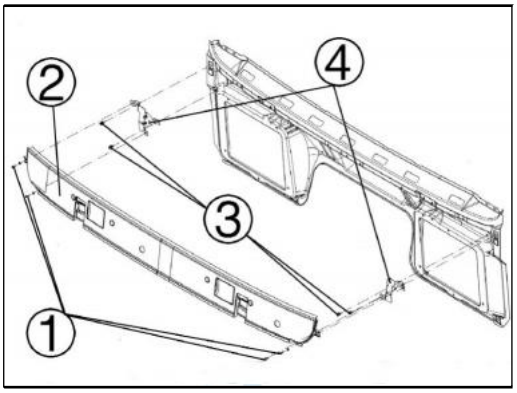

1. Remove the M6*20 cross recessed pan head screw ① with a cross head screwdriver, and take out the windshield trim panel ②.
2. Remove the M8*25 hexagon head bolt assembly ③ with a 13mm socket wrench, and take out the bracket ④.

Remove the hinge plate assembly

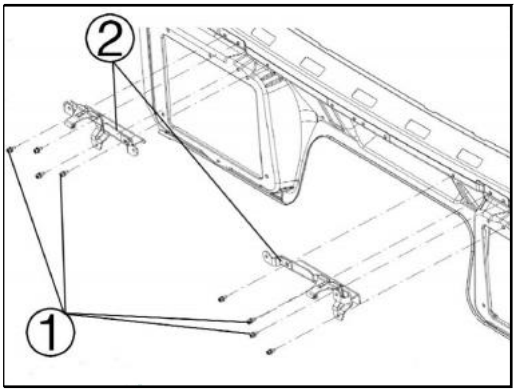

1. Remove the eight M8*25 hexagon socket head cap screws ① with a T40 socket head, and take out the hinge plate ②.

Remove the mask hinge plate

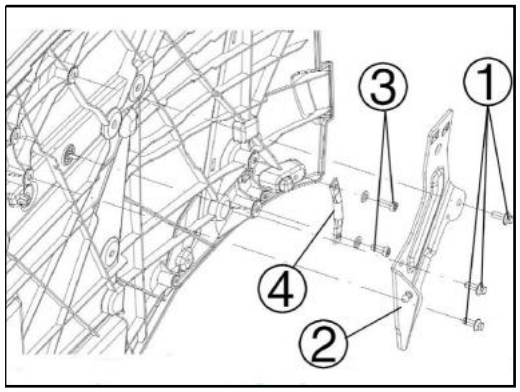

1. Remove the M8*20 hexagon socket head cap screw ③ with a T40 Torx bit socket, and take out the lock pin ④.
2. Remove the M8*20 hexagon flange bolt ① with a 10mm socket wrench, and remove the mask hinge plate ②.

Remove the mask grille

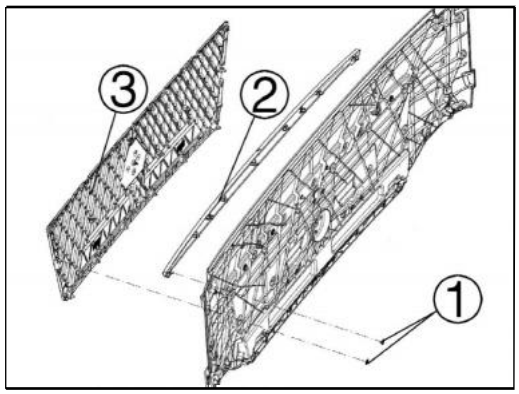

1. Remove 25 leaf spring nuts ① with a rocker, and remove the upper trim ② and mask grille ③.

Remove the pattern trademark

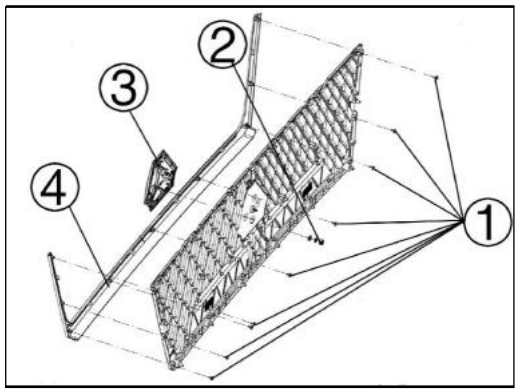

1. Remove the M5 hexagon nut ② with an 8mm socket wrench, and take out the pattern trademark ③.
2. Remove the M4.8*19 cross recessed pan head screw ① with a cross head screwdriver, and take out the lower trim strip ④.

Remove the mask lock assembly

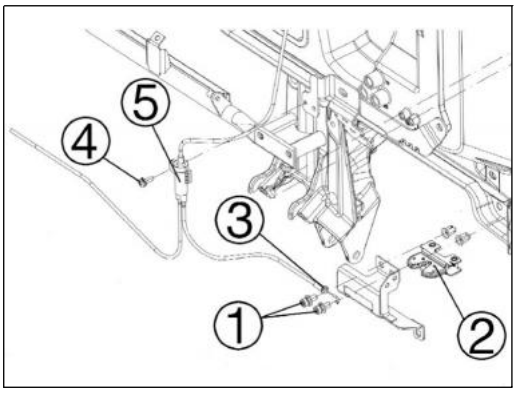

1. Remove the M8*25 hexagon head assembling bolt ① with a 13mm socket wrench, and take out the mask lock assembly ②.

2. Remove the split retainer ring ③ with a rocker. Remove the M6*20 cross recessed pan head screw ④ with a cross head screwdriver, and take out the lock cable assembly ⑤.

Install the mask lock assembly

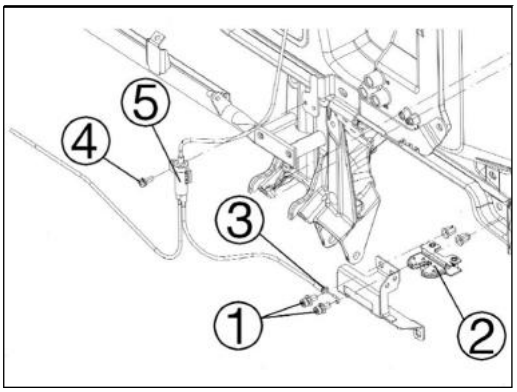

Installation steps

1. Install the lock cable assembly ⑤ on the front wall pipe harness bracket, and tighten the M6*20 cross recessed pan head screw ④ with a cross head screwdriver.

2. Install the end of the lock cable assembly on the mask lock assembly and fix it with the split retainer ring ③.

3. Install the mask lock assembly on the body, and use a 13mm socket wrench to tighten the M8*25 hexagon head assembling bolt to 20 ±2Nm.

Installation of pattern trademark

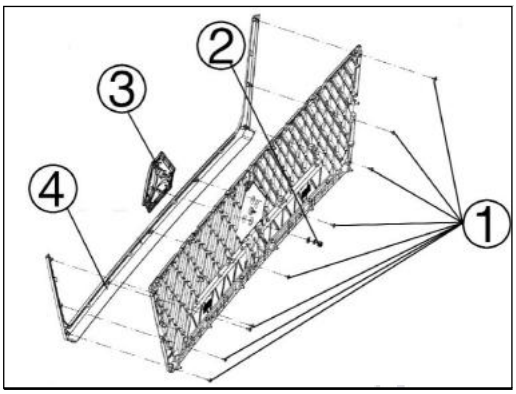

1. Install the pattern trademark ③ on the mask grille, and tighten the M5 hexagon nut with an 8mm socket.
2. Install the lower trim strip ④ on the mask grille, and tighten the M4.8*19 cross recessed pan head tapping screws with a cross head screwdriver.

Install the mask grille

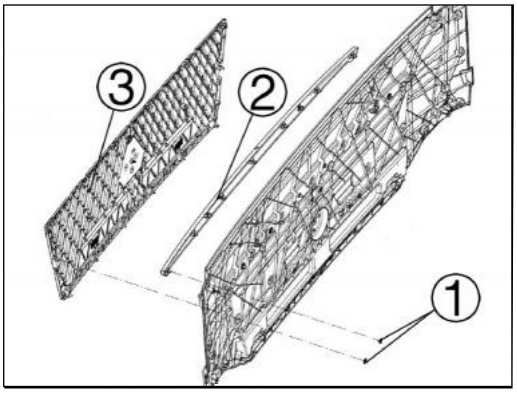

1. Install the mask grille ③ and upper trim strip ② on the outside of the radiator mask, and tighten the leaf spring nut ① on the inside with a rubber hammer and an M22 socket.

Install the mask hinge plate

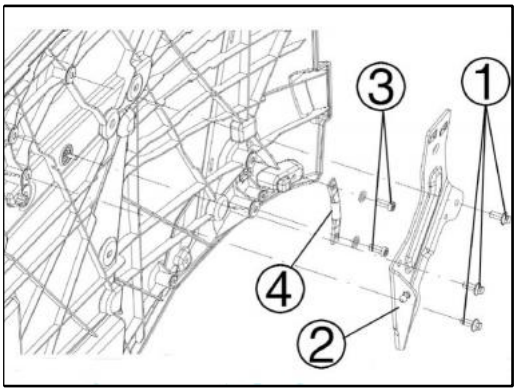

1. Install the mask hinge plate ② on the inner side of the mask, and use a 10mm socket wrench to tighten the M8*20 hexagon flange bolt ① to 20 ±2Nm.
2. Install the lock pin ④ at the lower left and right corners of the inner side of the mask, and use a T40 socket wrench to tighten the M8*20 hexagon socket head cap screws to 20±2Nm.

Install the hinge plate assembly

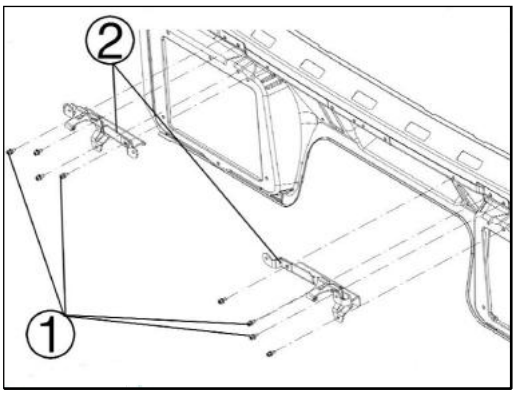

1. Install the mask hinge plate ② on the cab front wall module, and tighten the M8*20 hexagon socket head cap screw ① with a T40 socket to 20±2Nm.

Install the windshield trim panel

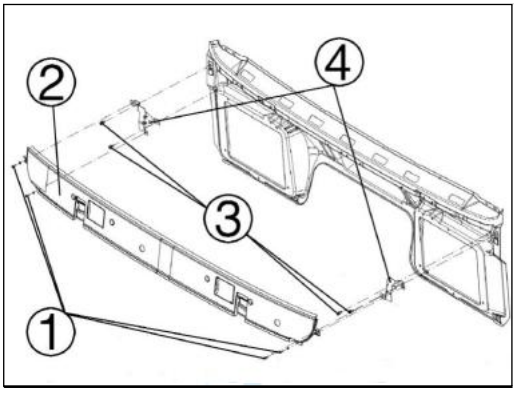

1. Install the bracket ④ on the left and right sides of the front wall module, and tighten the M8*25 hexagon head assembling bolt ③ with a 13mm socket.

2. Install the windshield trim panel ② on the outside of the bracket ④, and tighten the M6*20 cross recessed pan head screws with a cross head screwdriver.

Install the radiator mask assembly

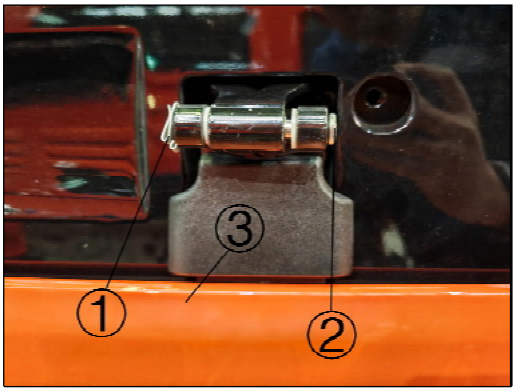

1. Install the mask sub-assembly ③ on the front wall module mask hinge plate, connect the hinge plate I and hinge plate II with the hinge pin ②, and lock them with the elastic retainer ring ①.

Install the gas spring



1. Install the gas spring ① on the front mask gas spring support support assembly and the front cross member ball joint, with the thick diameter end of the gas spring on the side of the face cover support.

Front cross member

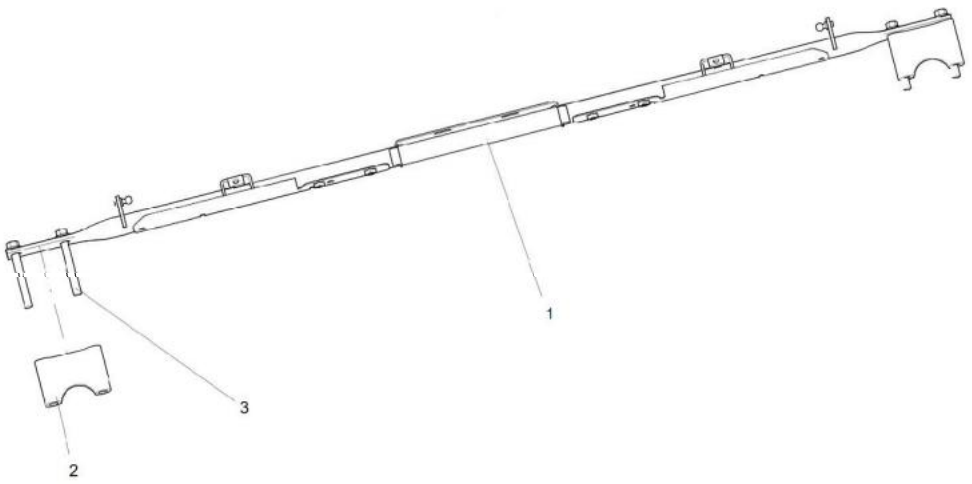

1. Front connecting cross member assembly 2. Cushion block 3. Hexagon flange serrated bolt

Remove the front cross member assembly

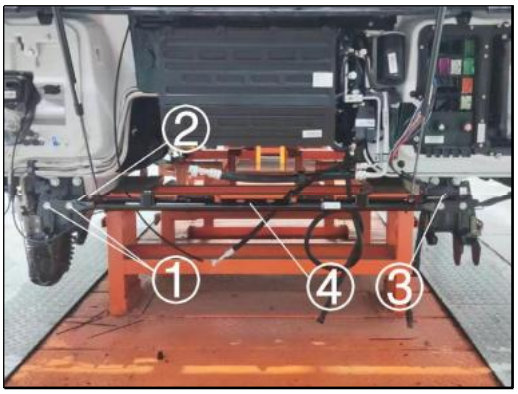

Removal steps

1. Remove the four M10*80 hexagon flange serrated bolts ① with a 13mm socket wrench.
2. Take out the cushion block ②, lifting handle sub-assembly ③ and front cross member assembly ④.

Note: Before removing the front cross member assembly, make sure that the front mask is supported by other external forces.

Install the front cross member assembly

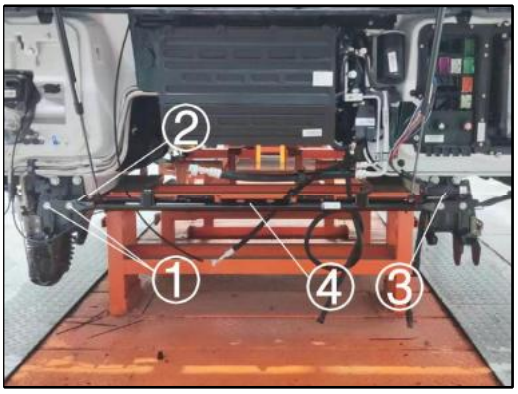

1. Connect the front cross member assembly ④, lift switch handle sub-assembly ③ and cushion block ② to the front suspension bracket, with the lift switch handle bracket on the outside of the cross member and the cushion block on the inside of the cross member.
2. Use a 13mm socket wrench to tighten the M10*80 hexagon flange bolt ① to 65±6Nm.

Instrument panel, center console

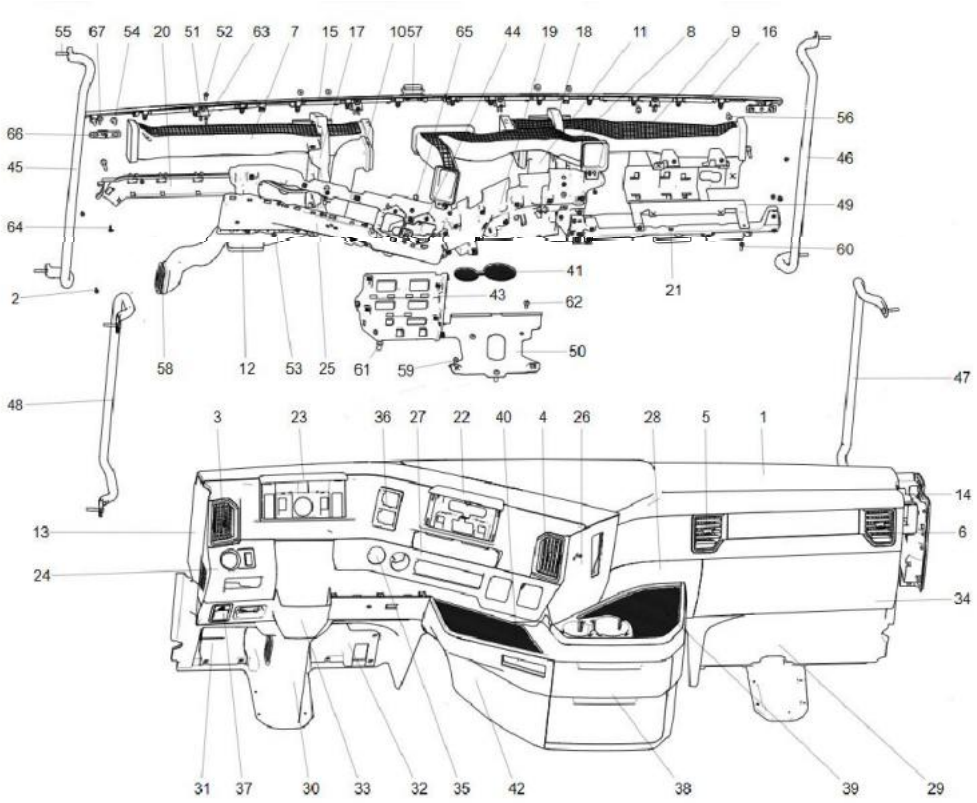

1. Instrument panel assembly 2. Cross recessed pan head tapping screw 3. Driver left air outlet assembly 4. Driver right air outlet assembly 5. Front passenger right air outlet assembly 6. Front passenger right air inlet assembly 7. Driver left face duct 8. Driver right face duct 9. Right face duct 10. Left foot duct 11. Right foot duct 12. Left foot air channel 13. Left end cover welding assembly 14. Right end cover welding assembly 15. Defroster left section assembly 16. Defroster right section assembly 17. Left duct bracket assembly 18. Right duct bracket assembly 19. Central harness bracket assembly 20. Left harness box 21. Right bracket assembly 22. MP5 cover 23. Instrument cover 24. Left knee protector assembly 25. Right knee protector assembly 26. USB panel assembly 27. Switch panel assembly 28. Middle guard assembly 29. Right lower guard assembly 30. Lower left guard assembly 31. Automatic clutch pedal cover 32. Accelerator pedal cover 33. Lower left guard panel assembly 34. Access cover assembly 35. START/STOP button cap 36. Central switch panel 37. Front compartment cover handle assembly 38. Console assembly 39. Left rubber pad 40. Console rubber pad 41. Cup holder rubber pad 42. Console maintenance cover assembly 43. Console electrical box 44. Hand valve sheet metal bracket 45. A-pillar grab handle 46. A-pillar grab handle - right 47. B-pillar grab handle - right 48. B-pillar grab handle 49. Front passenger's side fuse box bracket assembly 50. Middle drawer lower bracket 51. Front defrost vent bracket 52. Cross recessed pan head screw 53. Cross recessed pan head tapping screw

54. Hexagon flange bolt 55. Hexagon flange bolts 56. Hexalobular socket pan head screw 57. Camera cover assembly 58. Lower left guard grille 59. Hexagon flange screw 60. Cross recessed pan head screw 61. Rivet nut 62. Cross recessed pan heads screw 63. Cross recessed pan head tapping screw 64. Cross recessed pan Head tapping screw 65. Hexagonal flange bolt 66. Sheet metal connecting bracket 67. Hexagon flange nut

Remove the lower left guard assembly

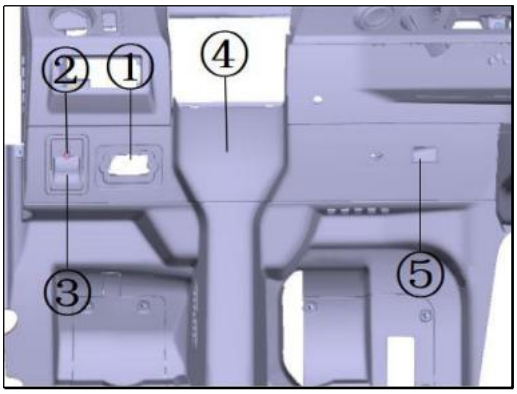

Removal steps

1. Remove the OBD port ① with a rocker.

2. Remove the M4.2*16 cross recessed pan head tapping screw ② with a cross head screwdriver, and take out the front compartment cover handle assembly ③.

3. Remove the lower left protective plate assembly ④ with a rocker, take out the USB harness ⑤, and take out the lower left protective plate assembly.

Remove the lower left guard assembly

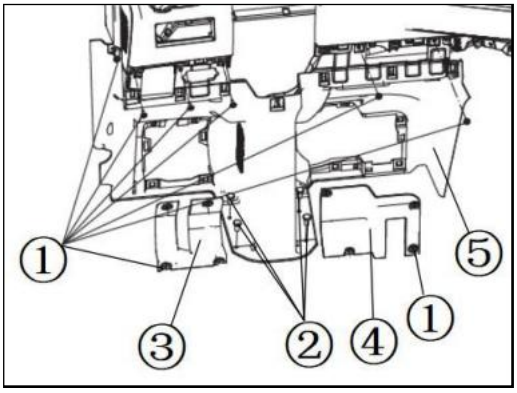

1. Remove the four M4.2*16 cross recessed pan head tapping screws ① with a cross head screwdriver, and remove the clutch pedal cover ③.

2. Remove the four M4.2*16 cross recessed pan head tapping screws ① with a cross head screwdriver, and remove the accelerator pedal cover ④.

3. Remove six M4.2*16 cross recessed pan head tapping screws ① and four M4.8*19 cross recessed pan head tapping screws ② with a cross head screwdriver, and remove the lower left guard ⑤.

Remove the access cover assembly

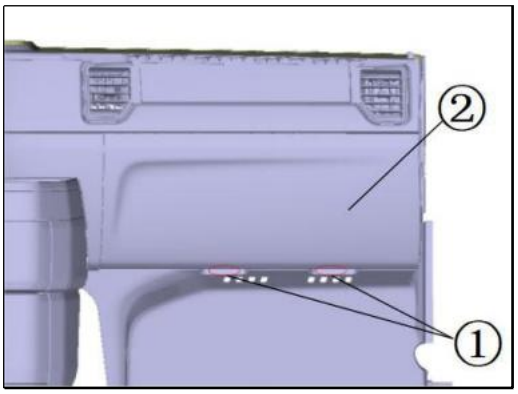

1. Remove the access cover assembly ② outward at position ①.

Remove the lower right guard assembly

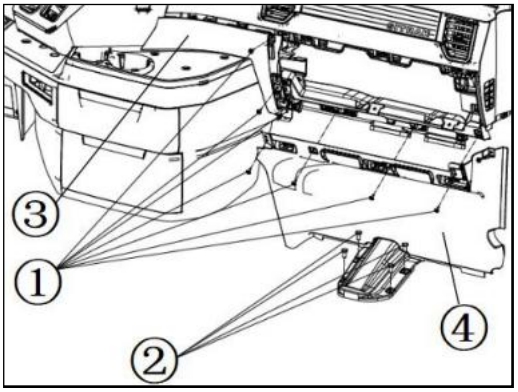

1. Remove three M4.2*16 cross recessed pan head tapping screws ① with a cross head screwdriver, and remove the middle guard ③ with a rocker.

2. Remove four M4.2*16 cross recessed pan head tapping screws ① and four M4.8*19 cross recessed pan head tapping screws ② with a cross head screwdriver, and take out the lower right guard assembly ④.

Remove the console drawer and access cover

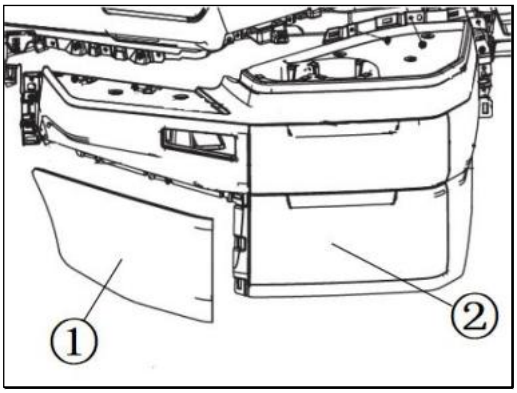

1. Remove the console access cover ① with a rocker.

2. Remove the two M4*10 cross recessed pan head screws (the screws are on the inner elevation of the drawer) with a cross head screwdriver, and remove the console lower drawer ②.

Remove the console assembly

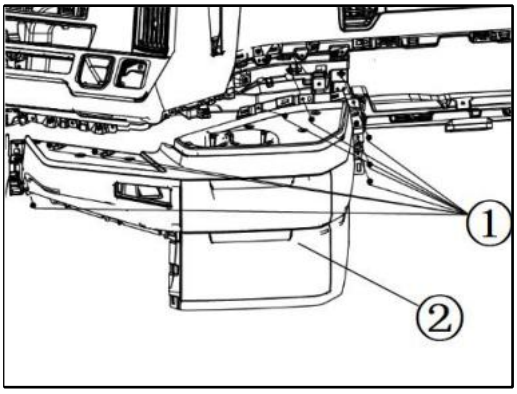

1. Remove the eight M4.2*16 cross recessed pan head tapping screws ① with a cross head screwdriver.

2. Remove the M8*20 cross recessed pan head screw ③ with a PH3 socket, and take out the console assembly ②.

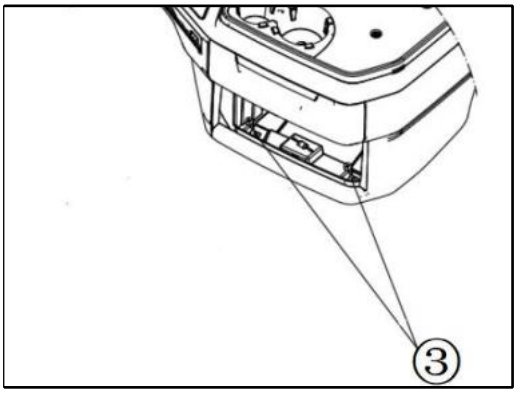

Remove the air outlet

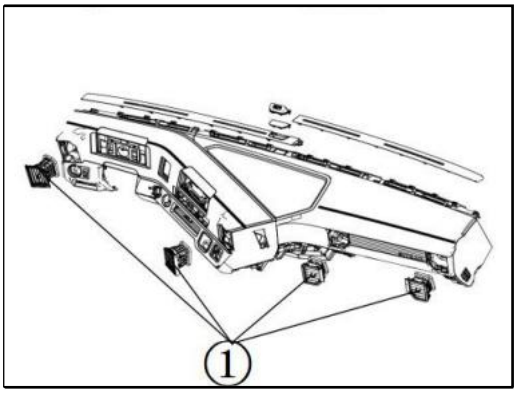

1. Remove the air outlet assembly ① with a rocker.

Remove the defroster grille assembly

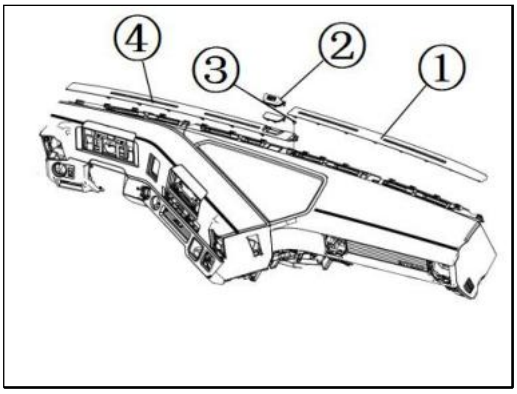

1. Remove the defroster right section assembly ① with a rocker, and remove the camera cover ②.

2. Remove the M4.2*16 cross recessed pan head tapping screw ③ with a cross head screwdriver, and remove the defroster left section assembly ④ with a rocker.

Remove the switch panel assembly

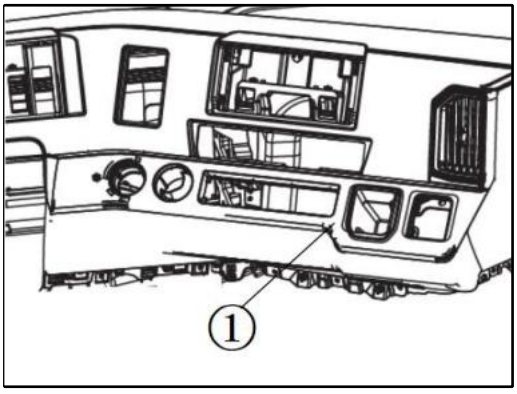

1. Remove the switch panel assembly ① with a rocker, take out the rocker switch harness, and take out the switch panel assembly ②.

Remove the left knee protector assembly

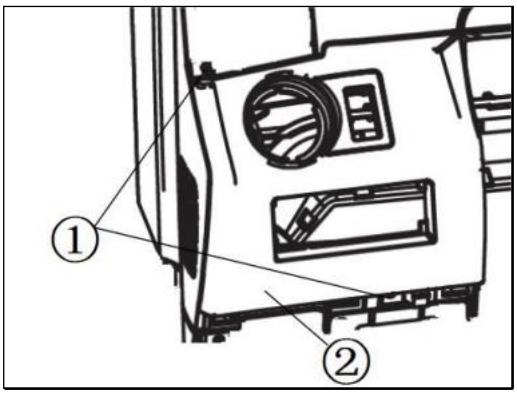

1. Remove the M4.2*16 cross recessed pan head tapping screw ① with a cross head screwdriver, and remove the left knee protector assembly ②.
2. Remove the rocker switch harness and take out the left knee protector assembly ②.

Remove the USB panel assembly

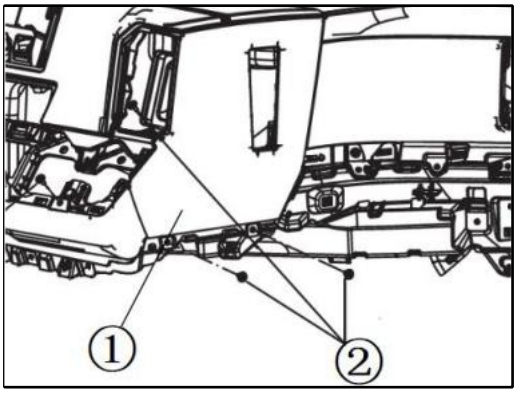

1. Remove the M4.2*16 cross recessed pan head tapping screw ② with a cross head screwdriver, and remove the USB panel assembly ① with a rocker.
2. Remove the USB charging port harness and take out the USB panel assembly ①.

Remove the right knee protector assembly

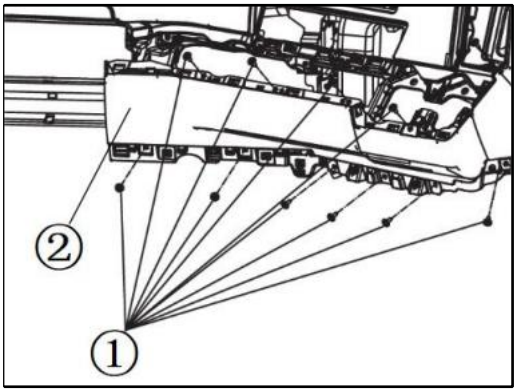

1. Remove the M4.2*16 cross recessed pan head tapping screw ① with a cross head screwdriver, and remove the right knee protector assembly ② with a rocker.

Removal of instrument panel electrical components

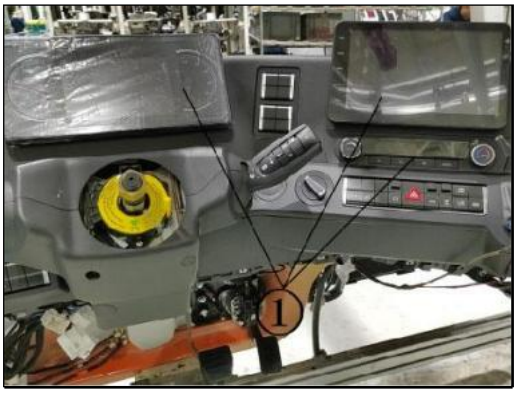

1. Remove the instrument cover and MP5 cover with a rocker.

2. Remove the M4.2*16 cross recessed pan head tapping screw with a cross head screwdriver, remove the electrical component connector harness, and take out the electrical component (1).

Remove the instrument panel assembly

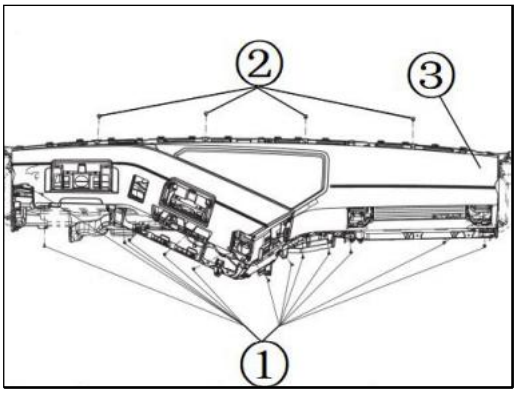

1. Remove the M4.2*16 cross recessed pan head tapping screw ① and M6*20 cross recessed pan head screw with a cross head screwdriver, and take out the instrument panel assembly.

Remove the central harness bracket assembly

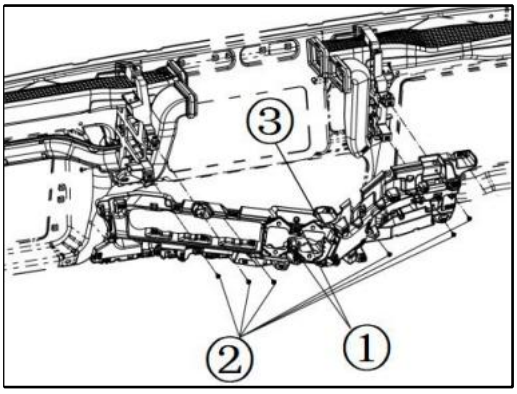

1. Remove the M6*25 cross recessed pan head screw ① with a cross head screwdriver, and take out the parking brake valve.

2. Remove the M4.2*16 cross recessed pan head tapping screw ② with a cross head screwdriver, and take out the central harness bracket assembly ③.

Remove the lower duct

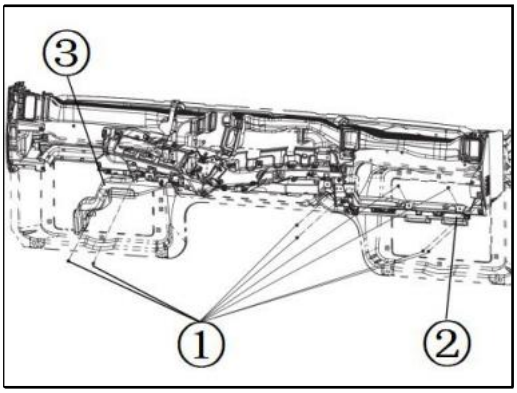

1. Remove the M4.2*16 cross recessed pan head tapping screw ① with a cross head screwdriver, and remove the lower ② of the right foot blowing duct and the lower ③ of the left foot blowing duct.

Remove the end cover welding assembly

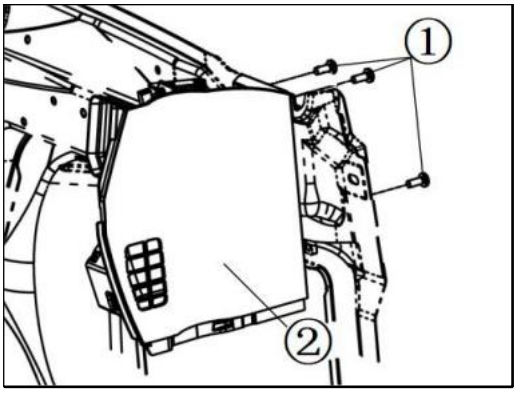

1. Remove the M8*25 hexagon flange bolt ① with a 10mm socket, and take out the end cover welding assembly.

Remove the upper duct

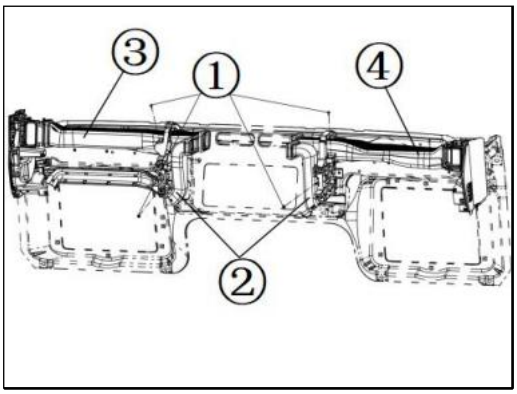

1. Remove the M4.2*16 cross recessed pan head tapping screw ① with a cross head screwdriver, and remove the upper ②, left face duct ③ and right face duct ④ of the floor duct.

Remove the duct bracket assembly

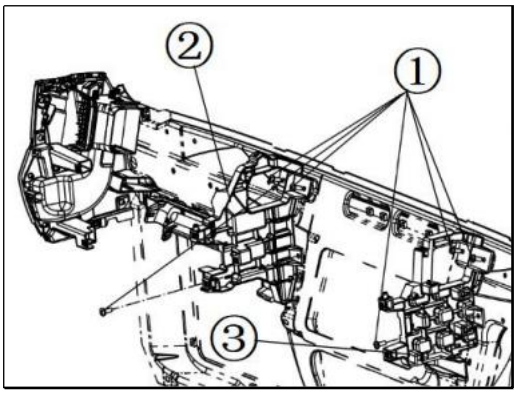

1. Remove the M8*25 hexagon flange bolt ① with a 10mm socket, and remove the left duct bracket assembly ② and the right duct bracket assembly ③.

Remove the front passenger's side fuse box bracket assembly

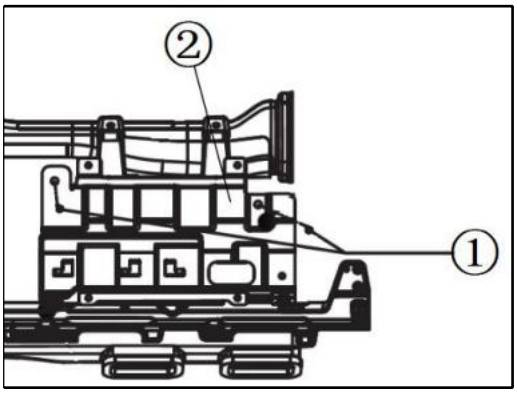

1. Remove the M8*25 cross recessed pan head screw ① with a cross socket, and remove the front passenger's side fuse box bracket assembly ②.

Install the front passenger's side fuse box bracket assembly

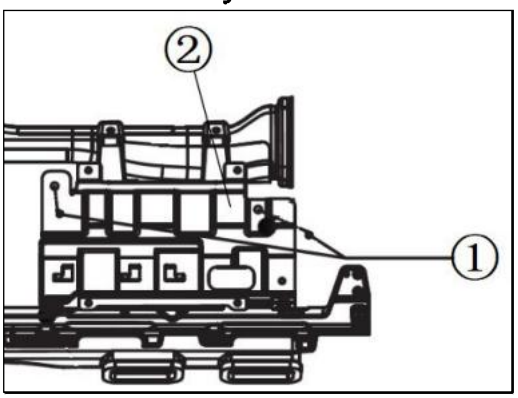

Installation steps

1. Install the fuse box bracket assembly ② on the right side of the front wall module, and tighten the M8*25 cross recessed pan head screw ① to 8 +2Nm with a cross socket.

Install the duct bracket assembly

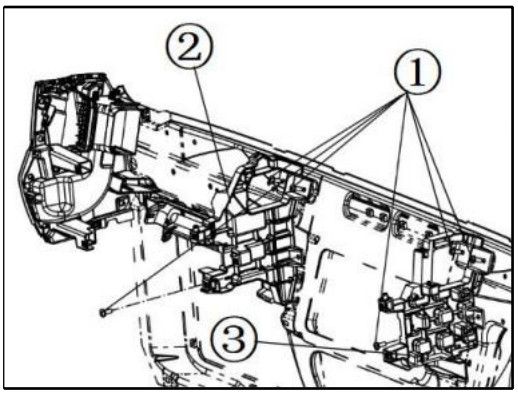

1. Install the left duct bracket assembly ② and the right duct bracket assembly ③ on both sides of the front wall module heater, and tighten the M8*25 hexagon flange bolt ① to 8+2Nm with a 10mm socket.

Install the upper duct

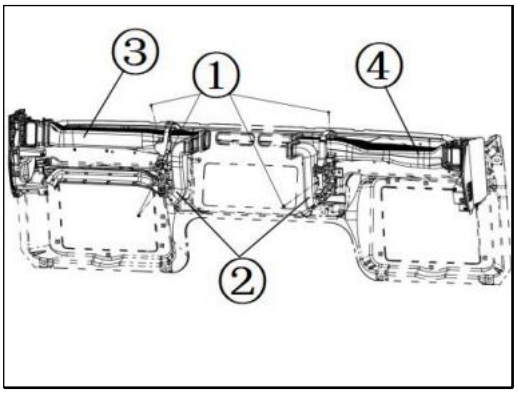

1. Connect the left face duct ③, the right face duct ④ and the foot duct ② to the heater, and keep the connected pipe orifice sealed with a cross Tighten the M4.2*16 cross recessed pan head tapping screw ① with a head screwdriver to fix the upper duct on the bracket.

Install the end cover welding assembly

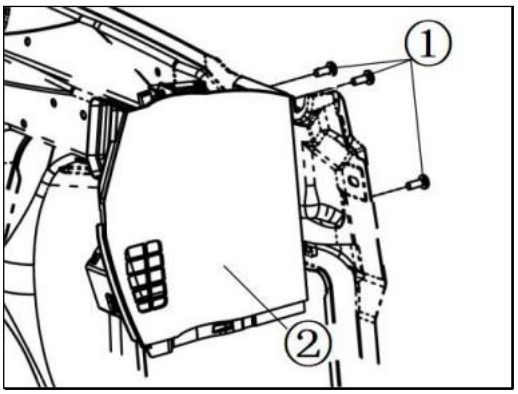

1. Install the end cover welding assembly ② at both ends of the front wall module, connect the inner side with the face blowing duct, and tighten the M8*25 hexagon flange bolt ① to 8+2Nm with a 10mm socket.

Note: When installing the left end cover welding assembly, the lower end needs to be connected to the left harness channel.

Install the central harness bracket assembly

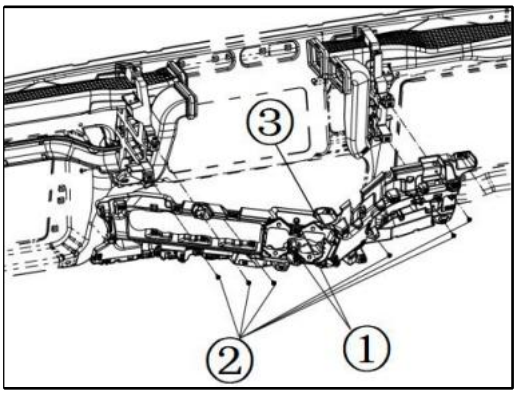

1. Install the central harness bracket sub-assembly ③ on the duct fixing bracket, and tighten the M4.2*16 cross recessed pan head tapping screw ② with a cross head screwdriver.

2. Install the parking brake valve fixing bracket on the central harness bracket assembly ③, and tighten the M6*25 cross recessed pan head screw ① with a cross head screwdriver.

Install the lower duct

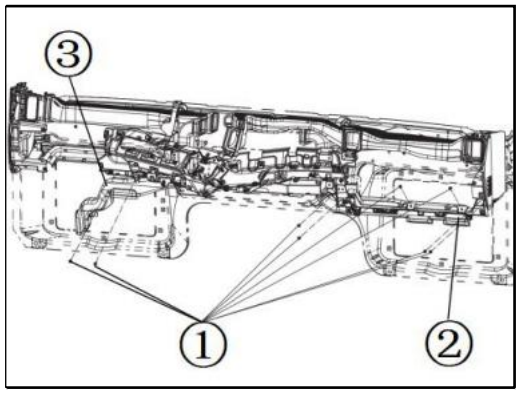

1. Connect the lower ③ right heater of the left foot blowing duct, and tighten the M4.2*16 cross recessed pan head tapping screws on the left side with a cross head screwdriver to fix the duct on the body.

2. Connect the lower ③ left heater of the right foot blowing duct, tighten the M4.2*16 cross recessed pan head tapping screw on the right side with a cross head screwdriver, and fix the duct on the right end cover welding assembly.

Install the instrument panel assembly

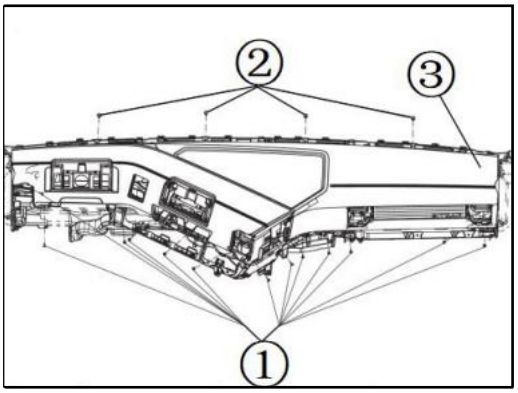

1. Clamp the instrument panel assembly ③ into the left and right end cover welding assembly and the central harness bracket assembly, and tighten the M4.2*16 cross recessed pan head tapping screw ① with a cross head screwdriver.

2. Fix the front end of the instrument panel assembly on the front wall bracket, and tighten the M6*20 cross recessed pan head screw ② with a cross head screwdriver.

Note: When installing the instrument panel assembly, reserve the harness connectors to be used to the corresponding parts in advance.

Install the defroster grille assembly

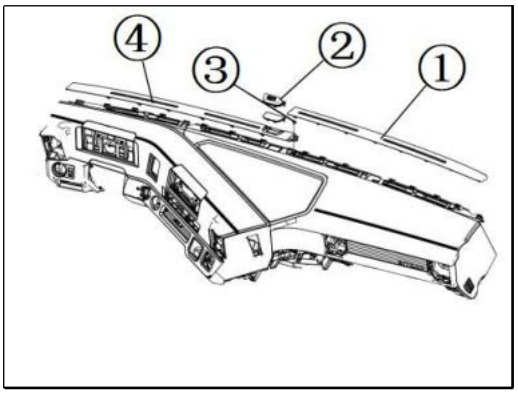

1. Install the left defroster grille ④ claw into the dashboard cover slot, and tighten the M4.2*16 cross recessed pan head screw ③ with a cross head screwdriver.

2. Install the right defroster grille ① claw into the dashboard cover slot, and install the camera cover ② on the right side of the left defroster grille.

Install the right knee protector assembly

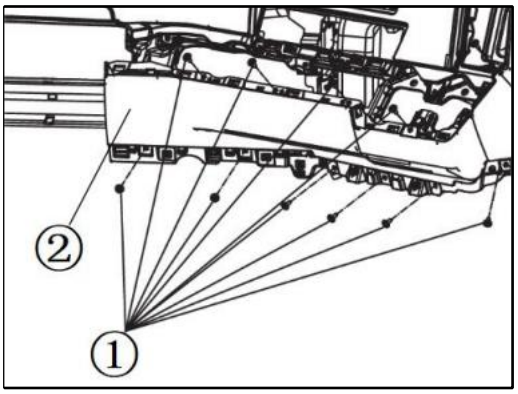

1. Connect the ambient light connector in the right knee protector assembly ② to the cab harness, clamp the right knee protector assembly to the instrument panel central harness bracket assembly, and tighten the M4.2*16 cross recessed pan head tapping screw ① with a cross head screwdriver.

Install the USB panel assembly

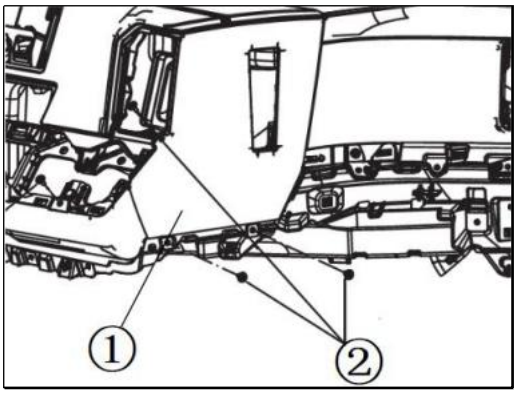

1. Connect the USB and 24V power harnesses.
2. Install the USB panel assembly ① on the dashboard frame, and tighten the M4.2*16 cross recessed pan head tapping screw ② with a cross head screwdriver.

Install the instrument electrical parts

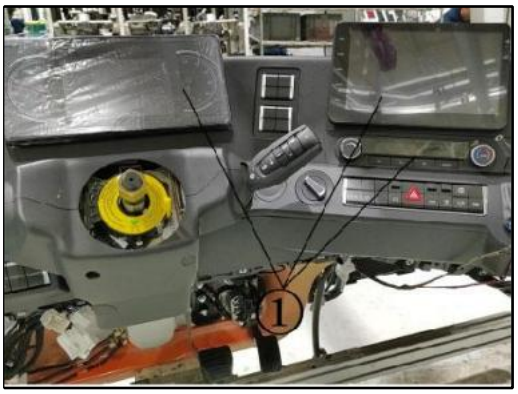

1. Plug the instrument electrical component ① harness, install it to the corresponding position, and tighten the M4.2*16 cross recessed pan head screws with a cross head screwdriver.
2. Install the instrument cover and MP5 cover in the bolt holes.

Install the left knee protector

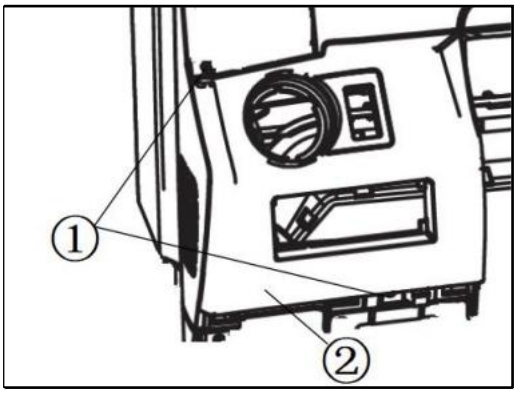

1. Plug the light button switch and the left rocker switch harness.

2. Clamp the left knee protector assembly ② to the left side of the instrument panel assembly, and tighten the M4.2*16 cross recessed pan head tapping screw ① with a cross head screwdriver.

Install the switch panel assembly

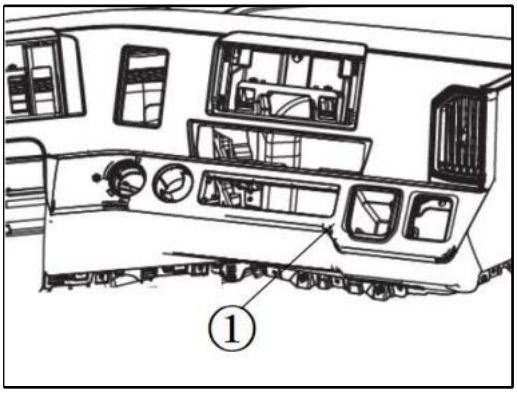

1. Connect the shifting switch harness, and install the switch panel assembly ① on the middle frame of the instrument panel.

Note: Before installation, pass the hand brake valve shield out of the mounting hole, and then clamp the hand brake valve shield in the mounting hole after installation.

Install the air outlet

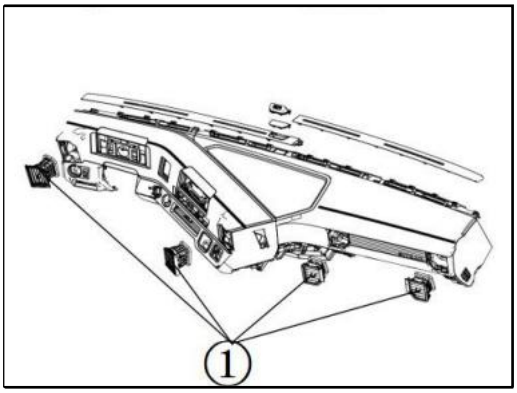

1. Clamp the air outlet ① into the instrument panel mounting hole.

Install the console assembly

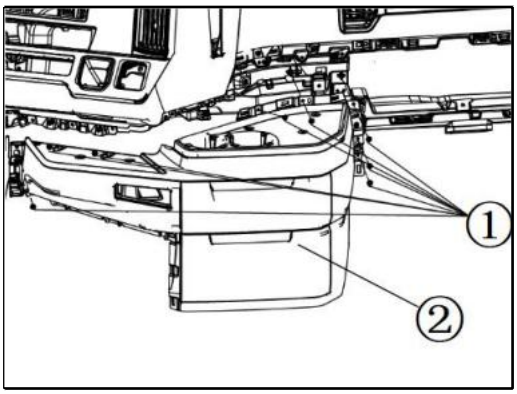

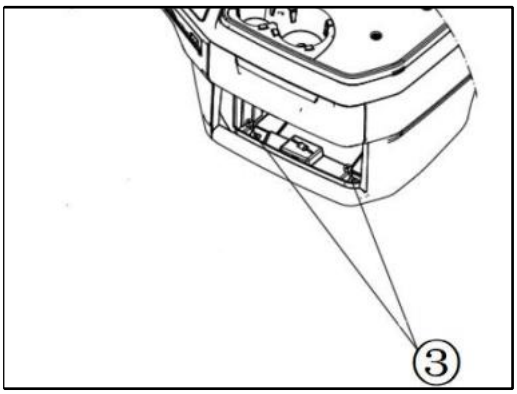

1. Install the center console host and USB interface mounting plate in place, connect the connectors firmly, and lay the left rubber pad, console cover rubber pad and cup holder rubber pad.

2. Install the console assembly ② in the middle of the instrument panel, clamp the bottom inner side into the sheet metal bracket, and tighten the M4.2*16 cross recessed pan head tapping screw ① with a cross head screwdriver.

3. Tighten the M8*20 cross recessed pan head screw ③ with a PH3 socket.

Install the console drawer and access cover

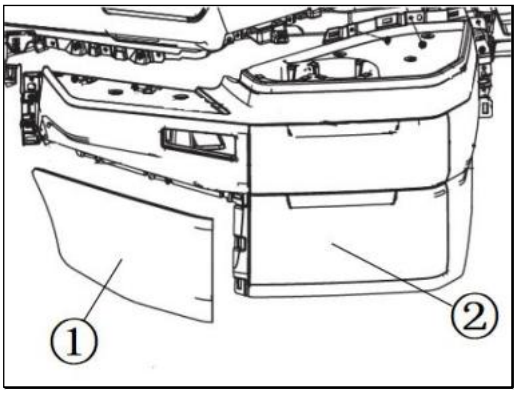

1. Install the drawer ② in the middle guide rail of the console, and tighten the M4*10 cross recessed pan head screws with a cross head screwdriver.
2. Install the access cover ① on the left side of the console.

Install the lower right guard assembly

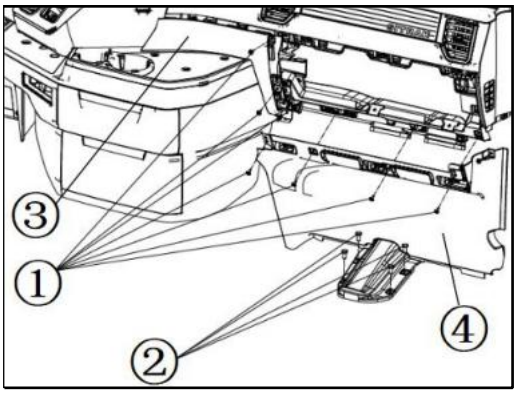

1. Install the middle guard ③ onto the instrument panel frame, and tighten the three M4.2*16 cross recessed pan head tapping screws ① with a cross head screwdriver.
2. Install the lower right guard assembly ④ on the right side of the instrument panel, tighten the 4.2*16 cross recessed pan head screw ① at the upper end with a cross head screwdriver to fix it on the right duct fixing bracket, and tighten the M4.8*19 cross recessed pan head tapping screw ② at the lower end with a cross head screwdriver to fix it to the cab body.

Install the access cover assembly

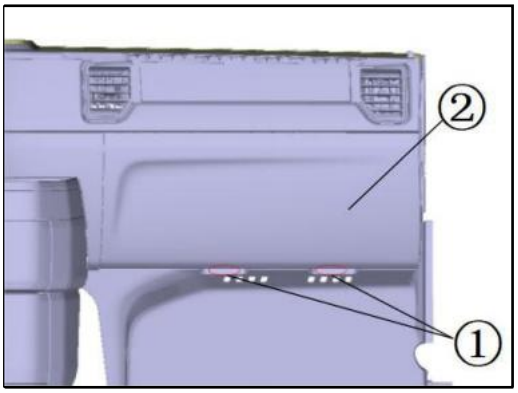

1. Install the access cover assembly ② between the right side of the instrument panel and the lower right guard assembly, and clamp it in place.

Install the lower left guard assembly

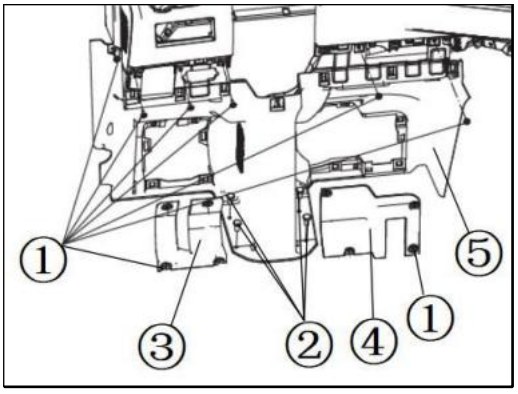

1. Install the lower left guard assembly ⑤ on the left side of the instrument panel, tighten the M4.2*16 cross recessed pan head tapping screw ① with a cross head screwdriver at the upper end to fix it on the instrument panel frame, and tighten the M4.8*19 cross recessed pan head tapping screw ② at the lower end with a cross head screw driver to fix it on the cab body.

2. Install the clutch pedal cover ③ and accelerator pedal cover ④ into the lower left protective plate mounting frame, and tighten the M4.2*16 cross recessed pan head screws with a cross head screwdriver.

Install lower left guard assembly

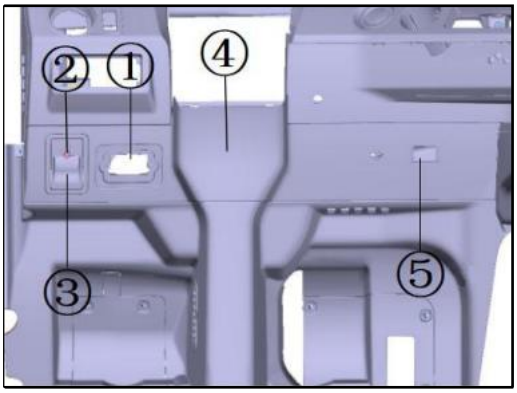

1. Pass the front compartment cover handle assembly ③ through the mounting hole of assembly ④ on the lower left guard.

2. Clamp the OBD interface ① into the mounting frame of the lower left protective plate assembly ④.

3. Install the USB port ⑤ and the room temperature sensor on the back of the lower left protective plate assembly ④.

4. Install the lower left guard assembly ④ between the lower left guard assembly and the instrument panel frame, and tighten the M4.2*16 cross recessed pan head tapping screw ② with a cross head screwdriver.

Seat



1. Left seat assembly 2. Right seat assembly 3. Hexagon socket head cap screw

Remove the driver's seat

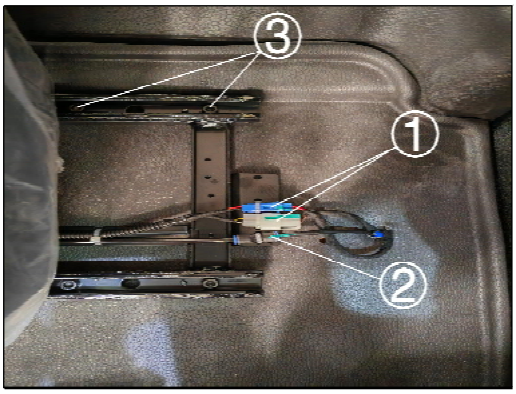

Removal steps

1. Remove the seat rear harness connector ① and air pipe connector ②.
2. Remove the six M8*40 hexagon socket round head bolts ③ with a T40 socket, and remove the seat.

Remove the front passenger's seat

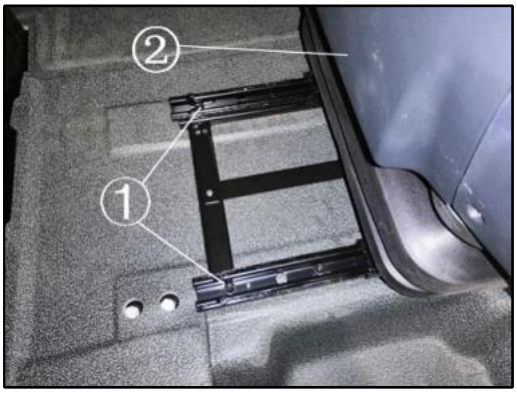

1. Remove the six M8*40 hexagon socket round head bolts ① with a T40 socket, and remove the front passenger's seat ②.

Install the driver's seat

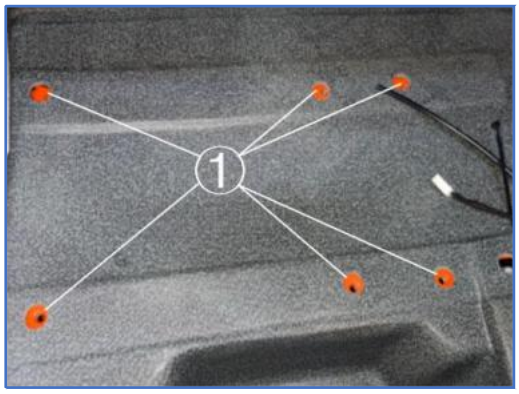

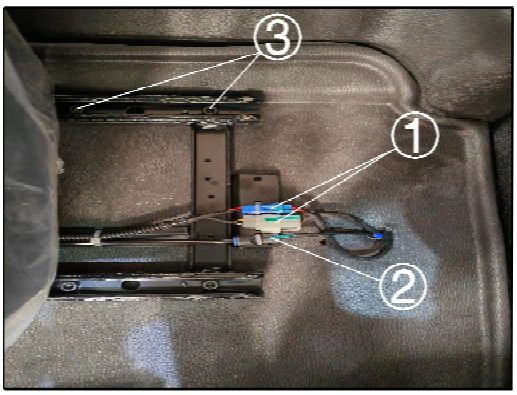

Installation steps

1. Install the seat to the fixing position ① of the cab body.

2. Tighten the M8*40 hexagon socket head cap screw ③ to 25±2.5Nm with a T40 socket.

3. Plug the seat harness ① and adjusting air pipe ②.

Note: During installation, pay attention to checking whether the fixing bolts have slipped. After installation, check whether the harness and air pipe are plugged firmly.

Install the front passenger's seat

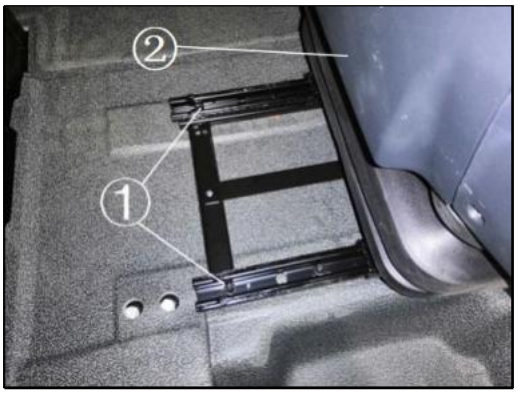

1. Install the front passenger's seat ② on the right side of the cab body, and tighten it with T40 socket M8*40 hexagon socket head cap screw ① to 25±2.5Nm.

Upper sleeper assembly

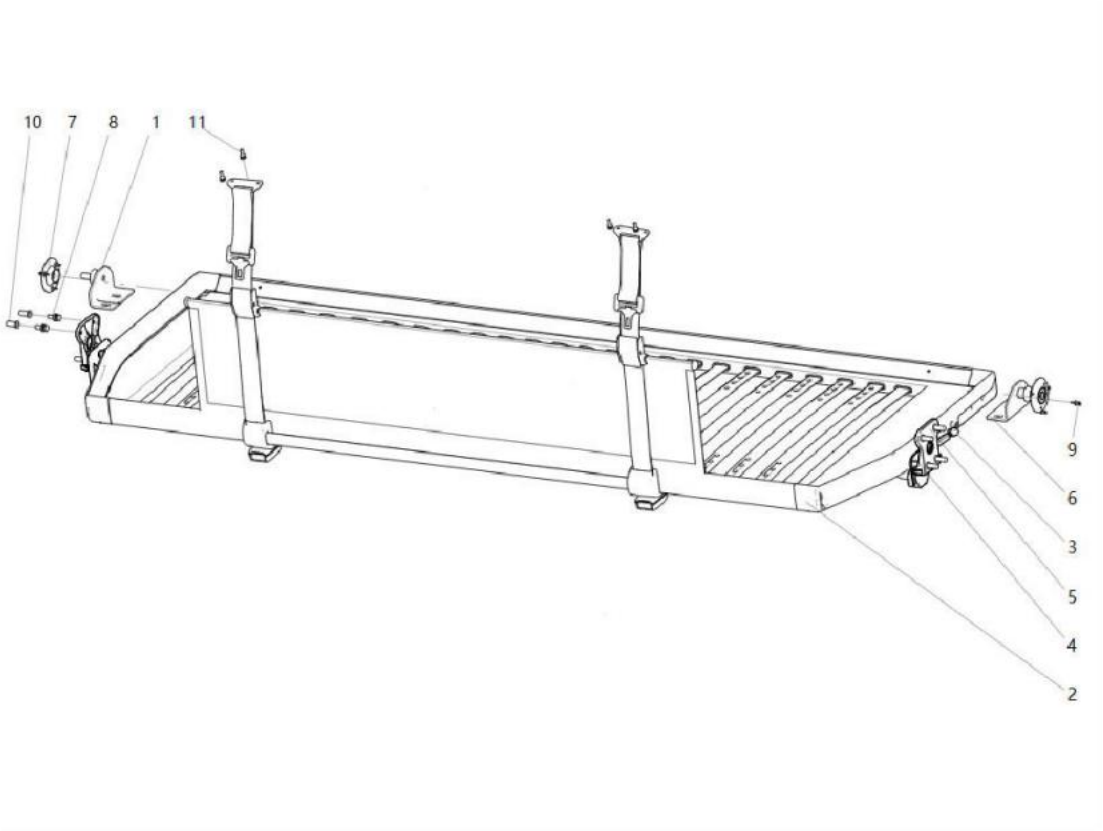

1. Sleeper right support assembly 2. Upper sleeper assembly 3. Gas spring assembly 4. Cover plate 5. Sleeper support 6. Sleeper left support assembly 7. Center bearing 8. Hexagon head bolt 9. Blind rivet 10. Rivet nut 11. Cross recessed pan head screw

Remove the sleeper assembly

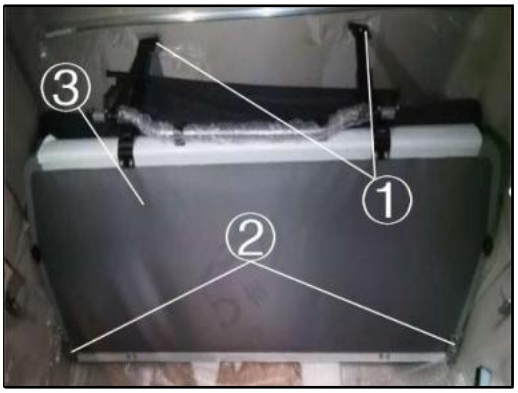

Removal steps

1. Remove the M6*20 cross recessed pan head screw ① with a cross recessed screwdriver.
2. Remove the M8*25 hexagon head bolt ② with a 13mm socket wrench.
3. Take out the sleeper assembly.

Remove the cover

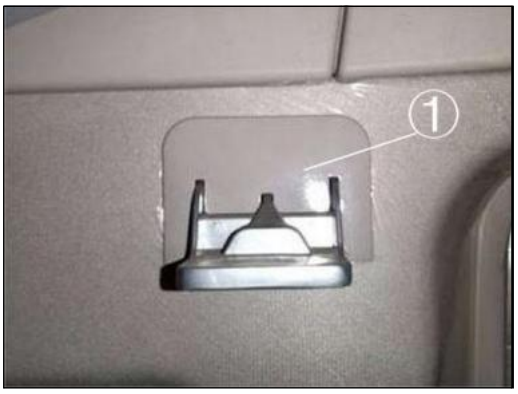

1. Remove the cover ① with a rocker.

Remove the sleeper support assembly



1. Take out the sleeper support assembly ①.

Removal of sleeper support

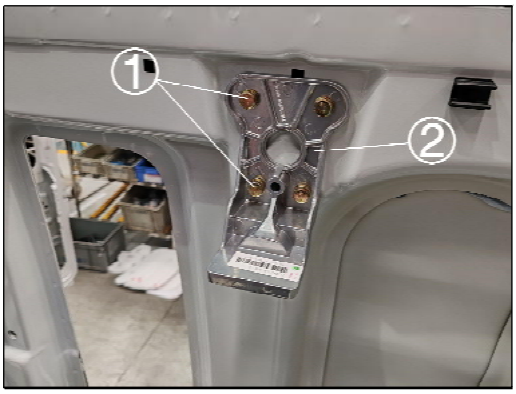

1. Remove the M8*25 hexagon head bolt ① with a 13mm socket wrench, and take out the sleeper support ②.

Install the sleeper support

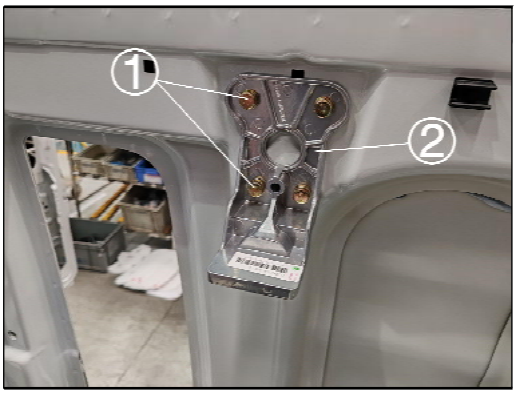

Installation steps

1. Install the sleeper support ② on the rear side of the cab body side wall.
2. Use a 13mm socket wrench to tighten the M8*25 hexagon head bolt to 20±2Nm.

Install the cover

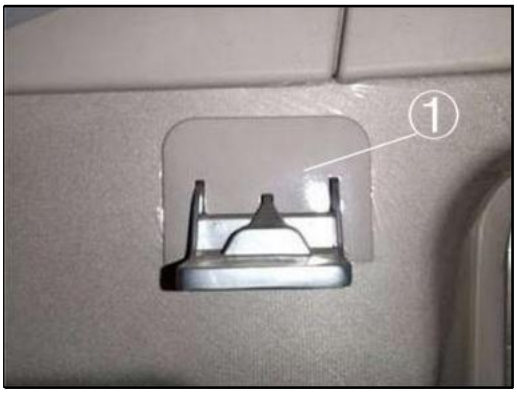

1. Clamp the cover ① into the cab side wall liner sleeper support mounting hole.

Install the sleeper support assembly



1. Install the sleeper support assembly ① into the center bearing hole of the cab side wall liner.

Install the sleeper assembly

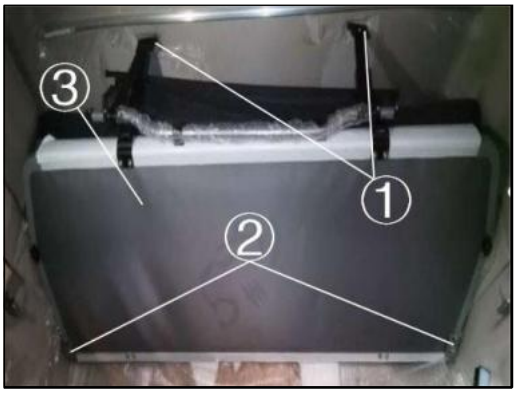

1. Install the sleeper assembly ③ on the sleeper support and sleeper support assembly, and fasten the sleeper assembly and sleeper support assembly with a 13mm socket M8*25 hexagon head bolt ② to 20±2Nm.
2. Install the sleeper guardrail on the top cover, and use a cross head screwdriver to tighten the M6*20 cross recessed pan head screw ① to 9 +1Nm.

Lower sleeper assembly

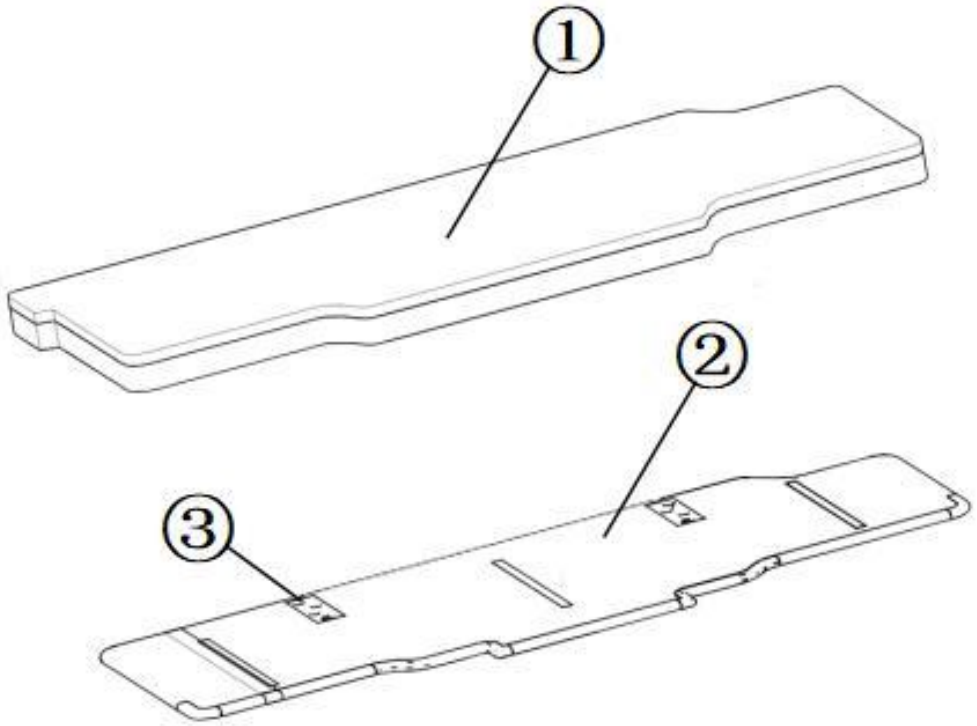

1. Lower sleeper cushion assembly 2. Lower sleeper support plate 3. Cross recessed pan head screw

Remove the lower sleeper cushion

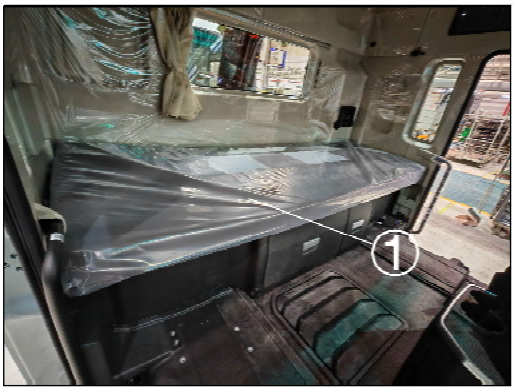

Removal steps

1. Take out the lower sleeper cushion ①.

Remove the lower sleeper support plate

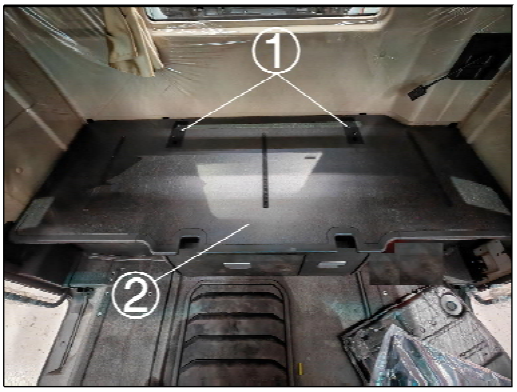

1. Remove the six M6*35 cross recessed pan head screws ① with a cross head insert, and take out the lower sleeper support plate ②.

Install the lower sleeper support plate

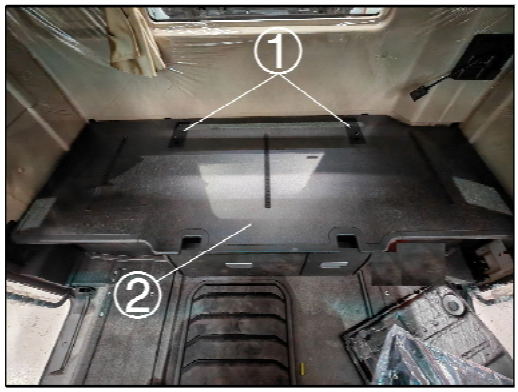

Installation steps

1. Install the lower sleeper support plate ② on the upper end of the sleeper toolbox (with the end with Velcro facing upward).

2. Use a cross head screwdriver to tighten the M6*35 cross recessed pan head screw ① to 6 ±0.6Nm.

Installation of lower sleeper cushion

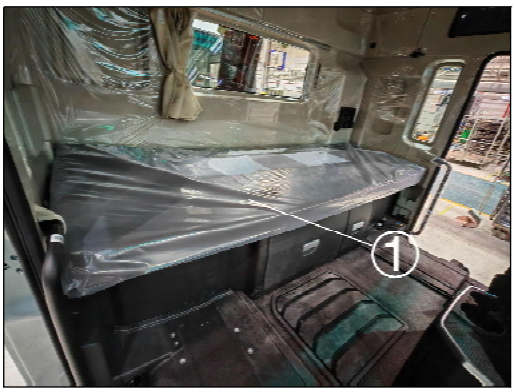

1. Install the lower sleeper cushion ① on the lower sleeper support plate and connect it with the Velcro.

Toolbox

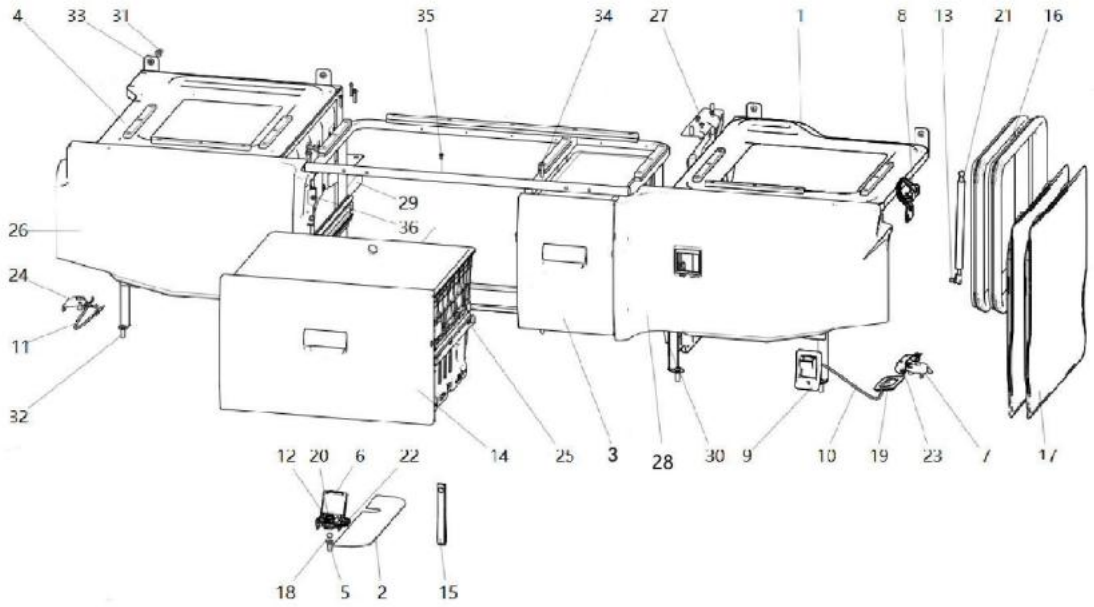

1. Left toolbox 2. Toolbox masking felt 3. Lower sleeper auxiliary drawer 4. Right toolbox 5. Blind rivet nut 6. Power socket cover bracket 7. Left lock pin assembly 8. Hinge 9. Opening handle assembly 10. Left toolbox cable assembly 11. Right toolbox cable assembly12. Plug 13. Spherical hexagon bolt 14. Storage box main drawer 15. Tether 16. Toolbox side cover sealing strip 17. Toolbox side cover assembly 18. Rubber end cover 19. Sheath 20. Buckle 21. Gas spring assembly 22. Lock assembly 23. Bracket 24. Right lock pin assembly 25. Lower sleeper drawer bracket 26. Toolbox right front cover 27. Lower sleeper turnover left bracket 28. Left front cover of toolbox 29. Hood harness baffle right 30. Hood left harness baffle 31. Blind riveting nut 1 32. Blind riveted nut 233. Cross recessed pan head screw 34. Hexalobular socket pan head tapping screw 35. Hexalobular socket pan head screw 36. Cross recessed pan head tapping screw

Remove the toolbox side cover



Removal steps

1. Remove the air strut ② with the rocker switch.

2. Remove the four M6*20 cross recessed pan head screws ① with a cross head screwdriver, and take out the side cover ③ of the toolbox.

Removal of hinge

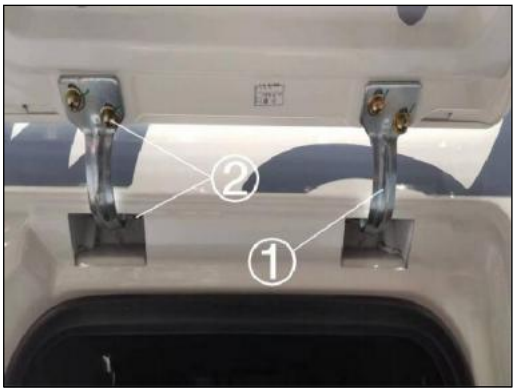

1. Remove the M6*20 cross recessed pan head screw ② with a cross head screwdriver, and take out the hinge ①.

Remove the storage box drawer



1. Pull up the locking port ①, and pull out the main drawer ② to remove it.

Removal of refrigerator



1. Remove four M8*20 cross recessed pan head screws ① with a PH3 socket, take out the refrigerator harness, and remove the refrigerator from the main drawer of the storage box.

Assembly ②.

Remove the front cover of the toolbox

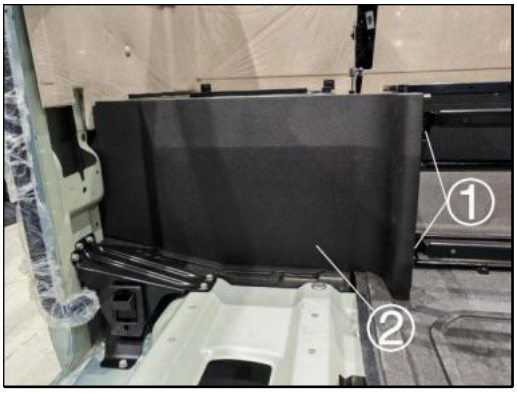

1. Remove the M6*16 cross recessed pan head self-tapping cover screw ① with a cross head screwdriver, and remove the toolbox front cover ② with a rocker.

Remove the rear wall ECU mounting bracket

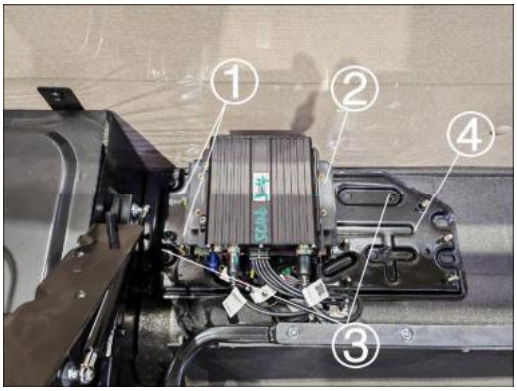

1. Remove the four M8 hexagon flange nuts ① with a 13mm socket wrench, and remove the rear wall ECU mounting box ②.

2. Remove the four M8*20 cross recessed pan head screws ③ with a PH3 socket, and remove the rear wall ECU mounting bracket ④.

Removal of toolbox

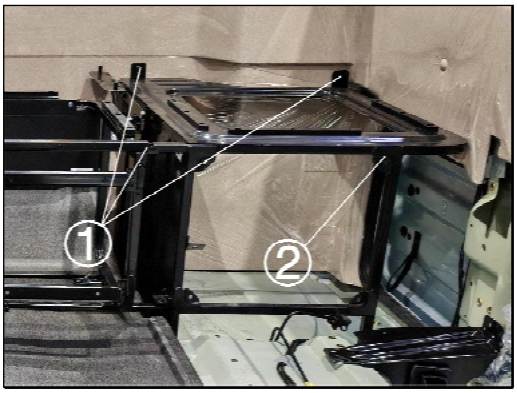

1. Remove the six M8*20 cross recessed pan head screws ① with a PH3 socket, and remove the toolbox ②.

Remove the middle bracket of the toolbox

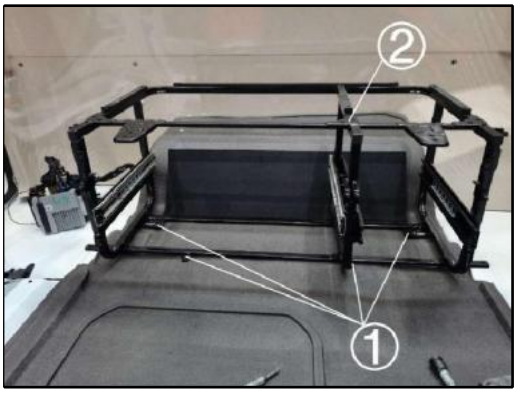

1. Remove the M8*35 cross recessed pan head screw ① with a PH3 socket, and remove the middle bracket ② of the toolbox.

Remove the toolbox sealing strip



1. Remove the toolbox sealing strip ① at a corner of the cab body

Remove the toolbox lock body assembly

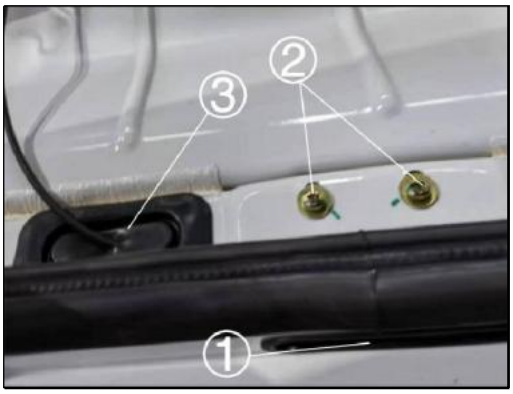

1. Remove the M6*20 cross recessed pan head screw ② with a cross head screwdriver, and take out the toolbox lock body sub-assembly ① from the hole of the sheath ③.

Remove the release handle assembly

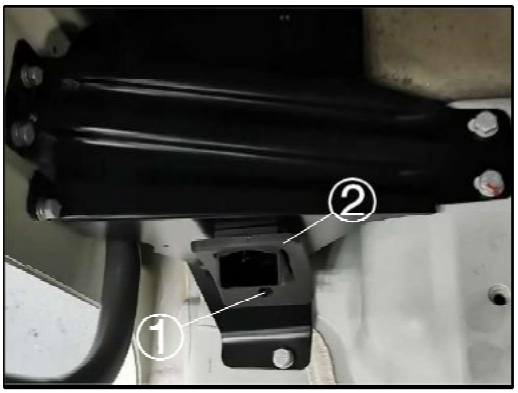

1. Remove the M5*20 cross recessed pan head screw ① with a cross head screwdriver.
2. Remove the toolbox cable and take out the release handle assembly ②.

Remove the lock pin from the toolbox

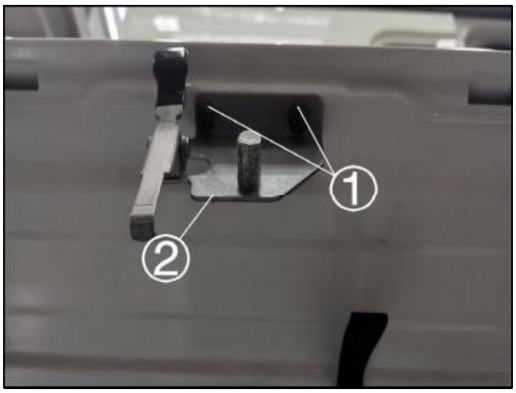

1. Remove the M6*10 cross recessed pan head screw ① with a cross head screwdriver, and take out the toolbox lock pin ②.

Install the toolbox lock pin

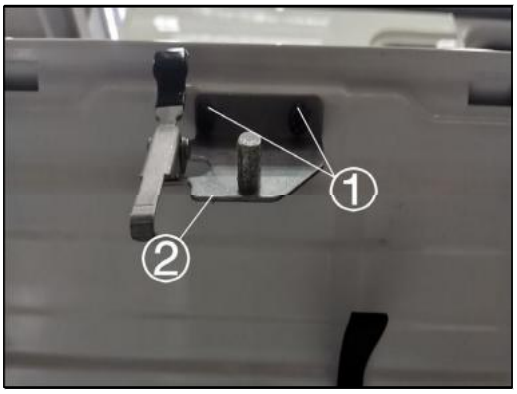

Installation steps

1. Install the toolbox lock pin ② in the middle of the inner lower end of the toolbox side cover, and tighten the M6*10 cross recessed pan head screws with a cross head screwdriver. Tightening torque: 4.5±0.45Nm.

Note: Apply grease to the lock pin for lubrication after assembly

Install the release handle

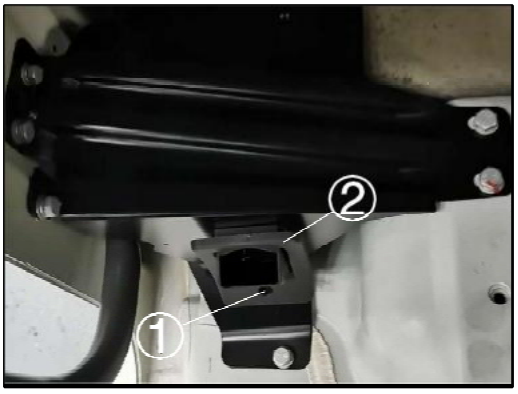

1. Install the toolbox cable in the slot of the release handle ②.
2. Install the release handle ② on the floor bracket, and tighten the M5*20 cross recessed pan head screw ① with a cross head screwdriver. Tightening torque: 4.5±0.45Nm.

Install the toolbox lock body assembly

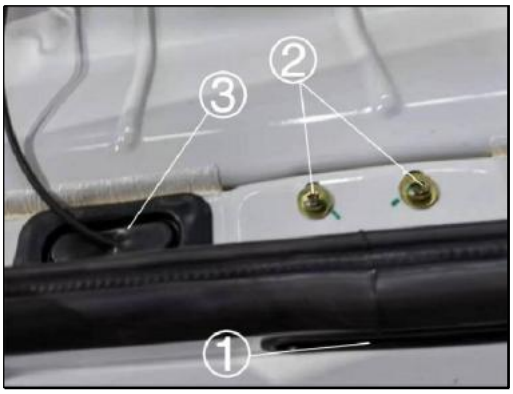

1. Pass the toolbox lock body ① through the mounting hole of the left sheath ③ into the lock body mounting groove, and use a cross head screwdriver to tighten the M6*20 cross recessed pan head screw ② to 4.5±0.5Nm.

Install the toolbox sealing strip



1. Align the opening of the toolbox sealing strip with the middle position below, install the four corners in turn, smash the sealing strip to the bottom, and assemble it in place with a rubber hammer.

Install the middle bracket of toolbox

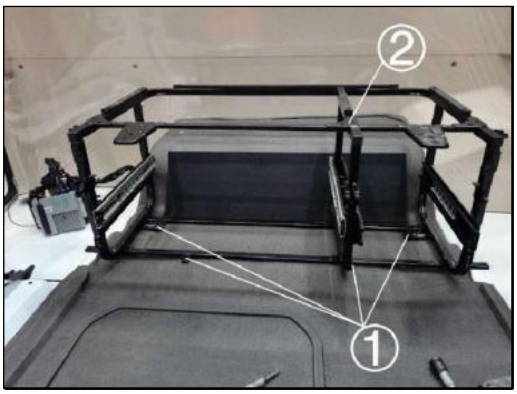

1. Install the toolbox middle bracket ② on the rear side of the cab floor mat, and tighten the M8*35 cross recessed pan head screw ① with a PH3 socket. Tightening torque: 16±2Nm.

Install the toolbox

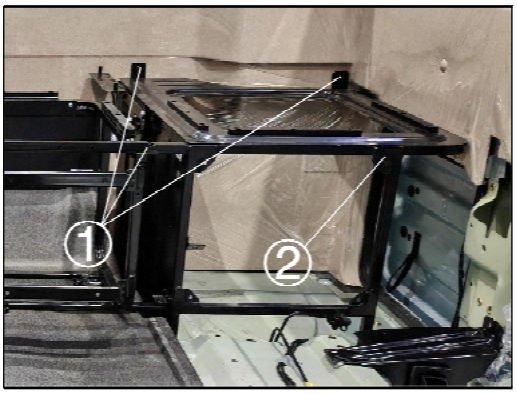

1. Install the toolbox ② on the inner rear side of the cab, and tighten the M8*20 cross recessed pan head screw ① to 16±2Nm with a PH3 socket.

Install the rear wall ECU mounting bracket

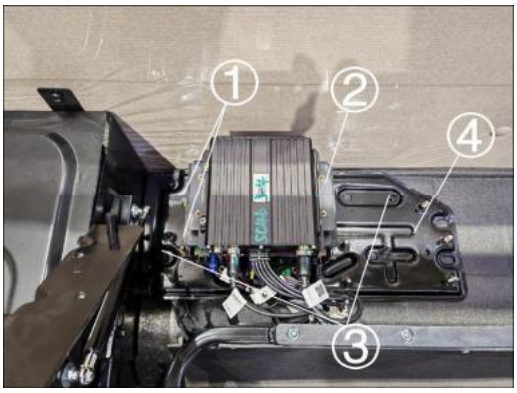

1. Install the rear wall ECU mounting bracket ④ on the rear wall high floor in the cab, and use a PH3 socket wrench to tighten the M8*20 cross recessed pan head screw ③ to 16±2Nm.
2. Install the rear wall ECU mounting box ② on the fixing bolts of the ECU mounting bracket, and use a 13mm socket wrench to tighten the M8 hexagon flange nut ① to 8±1Nm.

Install the toolbox front cover

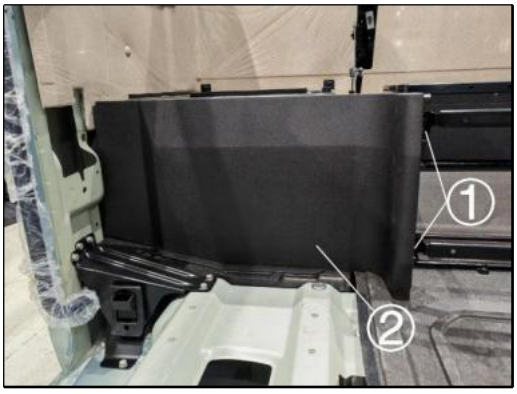

1. Clamp the attached claws of the toolbox front cover ② to the toolbox according to the holes. Tighten the M6*16 cross recessed pan head screw ① on the inside with a Phillips screwdriver.

Refrigerator installation



1. Install the refrigerator ② in the main storage box (with the display panel in the front), and tighten the M8*20 cross recessed pan head screw ① to 14 ±1.4Nm with a PH3 socket.

Install the storage box drawer



1. Install the storage box drawer ① into the guide rail groove of the middle bracket of the toolbox, align with the groove and push it to the bottom during installation, so that the locking port is clamped into the guide rail.

Installation of hinge

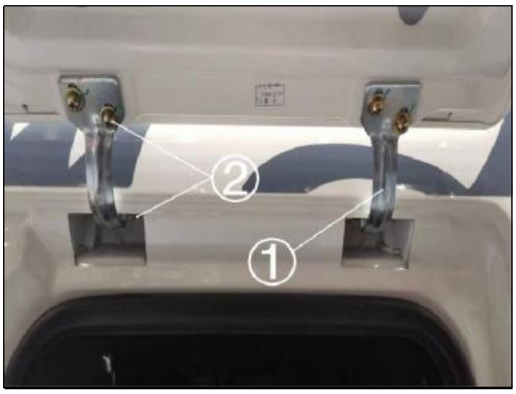

1. Install the hinge ① into the mounting hole of the cab body, and use a cross head screwdriver to tighten the M6*25 cross recessed pan head screw ② to 4.5±0.45Nm.

Note: Install the hinge at the foremost section of the mounting hole when tightening.

Install the toolbox side cover



1. Install the toolbox side cover sub-assembly ③ on the hinge, and tighten the M6*25 cross recessed pan head screw ① with a cross head screwdriver to 4.5±0.45Nm.

2. Install the gas spring ② on the toolbox side cover and the body ball stud, and clamp both ends in place.

Note: When tightening, tighten the screw in the middle of the hinge bolt hole, and keep both sides parallel.

Inner guard

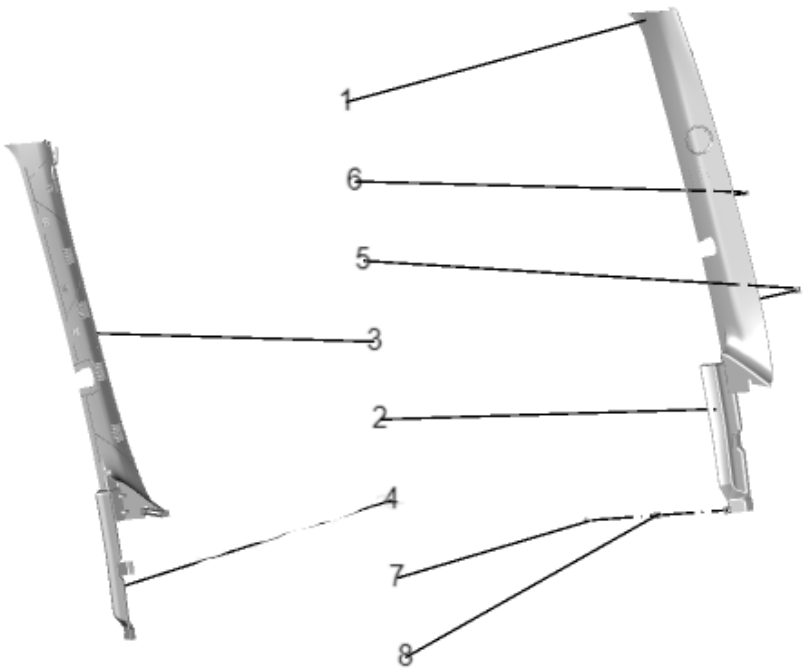

1. Left A-pillar upper inner cover 2. Left A-pillar lower inner cover 3. Right A-pillar upper internal cover 4. Right A-pillar lower inner cover 5. Spring clip I 6. Spring clip I 7. Cross recessed pan head tapping screw 8. Plastic nut seat

Remove the A-pillar inner cover

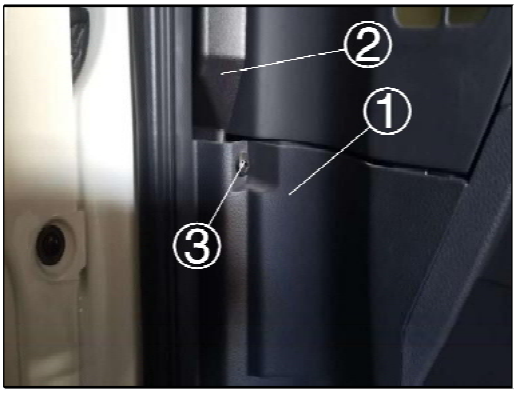

Removal steps

1. Use a cross head screwdriver to remove the M4.8*16 cross recessed pan head tapping screw ③ that fixes the A-pillar inner cover ② and the left knee cover ①.



2. Remove the claws of the A-pillar inner cover ① with a rocker, take out the speaker harness, and take out the A-pillar outer cover.

Remove the B-pillar inner cover

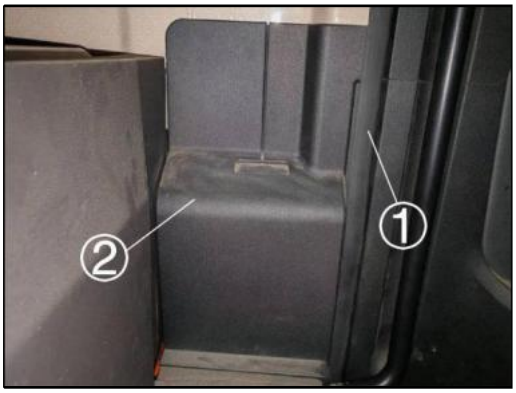

1. Remove the door frame rubber strip ① with a rocker, take out the B-pillar inner cover clip with a rocker, and take out the B-pillar interior cover ②.

Install the B-pillar inner cover

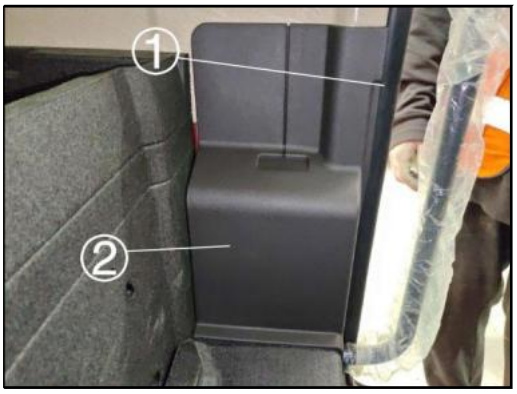

Installation steps

1. Install the B-pillar cover ② on the outside of the B-pillar grab handle, and clamp the buckle attached to the B-pillar cover in the mounting hole of the cab body.

Note: During installation, the front section of the B-pillar cover shall be embedded into the door rubber strip ①.

Install the A-pillar inner cover

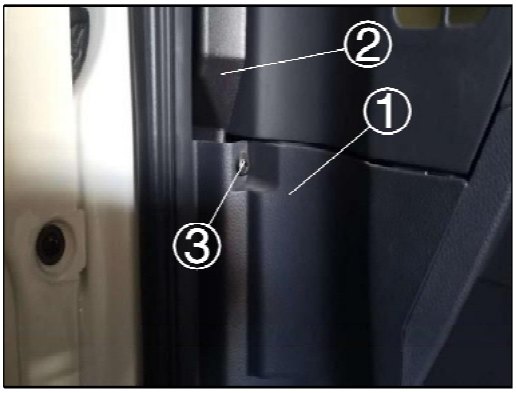



1. Clamp the A-pillar inner cover ② into the cab A-pillar mounting slot, and fix the M4.8*16 cross recessed pan head tapping screw ③ on the left knee protector ① at the lower end of the A-pillar lower inner cover ② with a cross head screwdriver.

2. Clamp the upper end of the A-pillar upper inner cover ② into the lower base plate of the miscellaneous box.

Miscellaneous box

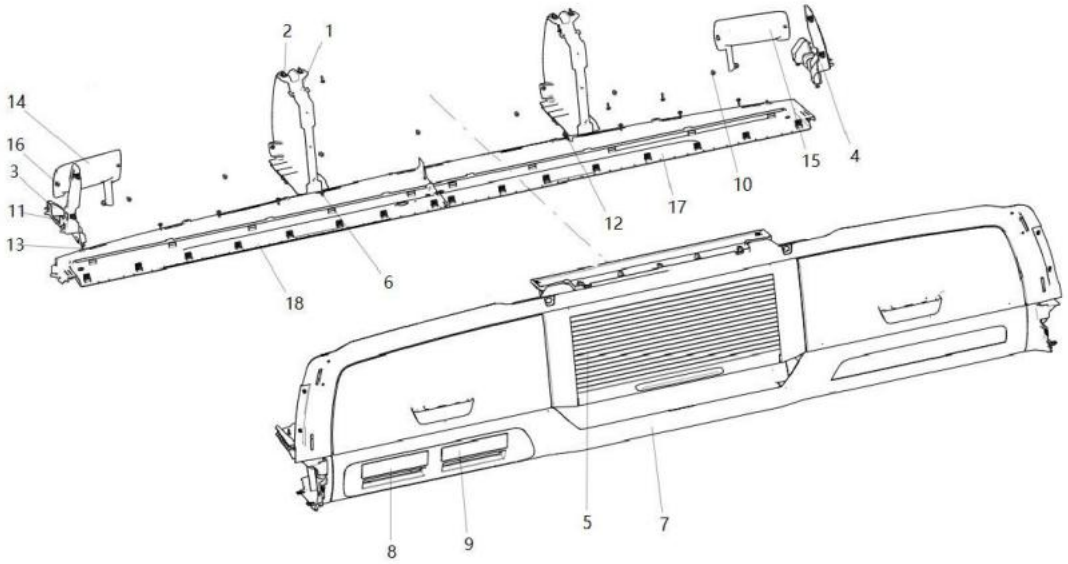

1. Upper middle connecting skeleton 2. Cross recessed pan head tapping screw 3. Upper miscellaneous box left bracket 4. Upper miscellaneous box right bracket 5. Overhead box 6. Sheet metal bracket 7. Upper miscellaneous box lower assembly 8. Driving recorder cover 9. MP3 cover 10. Cross recessed pan heads tapping screw (M5.5*16) 11. Cross recessed pan head tapping screw assembly (M4.2*16) 12. Cross recessed panel heads tapping screw assembly (M4.8*19) 13. Cross recessed pan Head tapping screw assembly (m4.8*16) 14. Left cover 15. Right cover 16. Tapping screw 17. Right base plate of upper miscellaneous box 18. Left base plate of upper miscellaneous box 19. Lamp hole cover

Remove the lower base plate

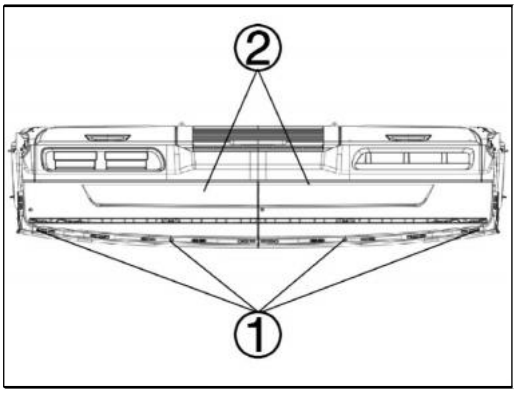

Removal steps

1. Remove the eight M4.8*16 cross recessed pan head tapping screws ① with a cross head screwdriver, and remove the lower base plate ② forward and downward.

Remove the lower miscellaneous box assembly

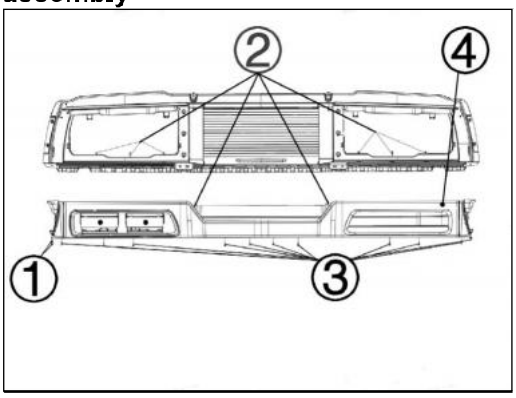

1. Remove the M4.2*16 cross recessed pan head tapping screws ①②③ with a cross head screwdriver, and take out the lower miscellaneous box assembly ④.

Remove the upper miscellaneous box assembly

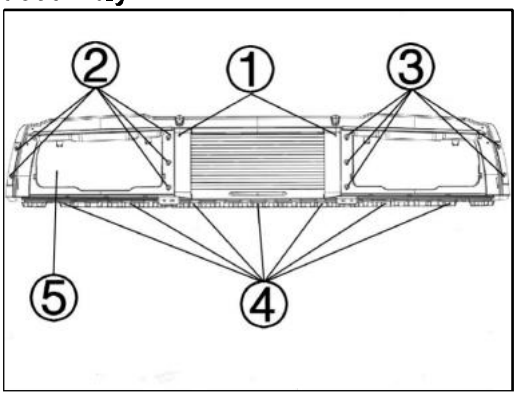

1. Use a cross head screwdriver to remove the M4.8*16 cross recessed pan head tapping screw ①, M4.2*16 cross reclaimed pan head tapping screws ②③, M5.5*16 cross recessed pan head tapping screw④, and take out the upper miscellaneous box assembly ⑤.

Install the upper miscellaneous box assembly

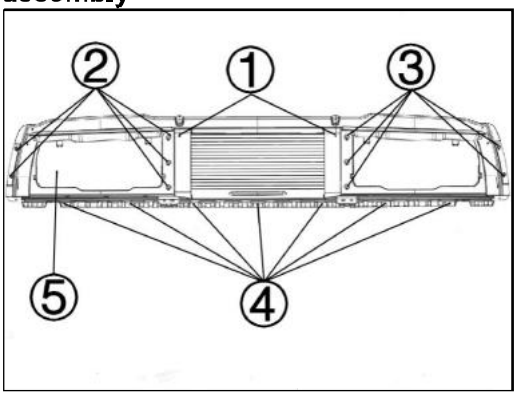

Installation steps

1. Install the upper miscellaneous box assembly ⑤ on the middle frame and the left and right brackets, and use a cross head screwdriver to tighten the M4.8*16 cross recessed pan head tapping screw ①, M4.2*16 cross recessed pan head tapping screw②③ and M5.5*16 cross recessed pan head tapping screw④.

Install the lower miscellaneous box assembly

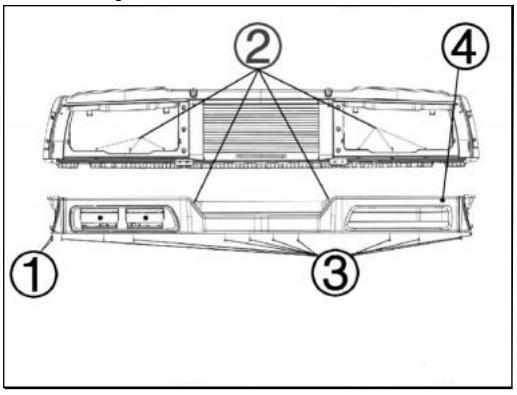

1. Install the lower miscellaneous box assembly ④ at the bottom of the upper miscellaneous box, and tighten the M4.2*16 cross recessed pan head tapping screws ①②③ with a cross head screwdriver.

Install the lower base plate

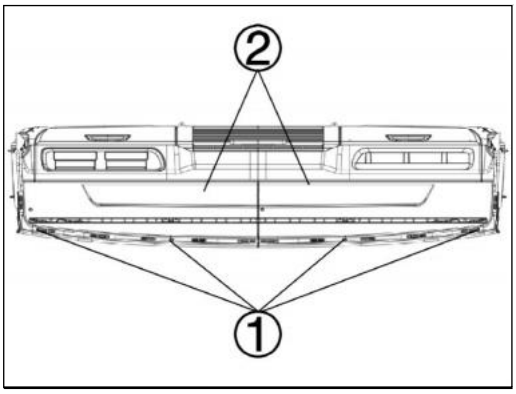

1. Install the lower base plate ② at the bottom of the lower miscellaneous box, clamp the rear end of the lower base plate to the lower miscellaneous box and fix the eight M4.8*16 cross recessed pan head tapping screws ① at the front end to the sunshade bracket with a cross head screwdriver.

Sunshade

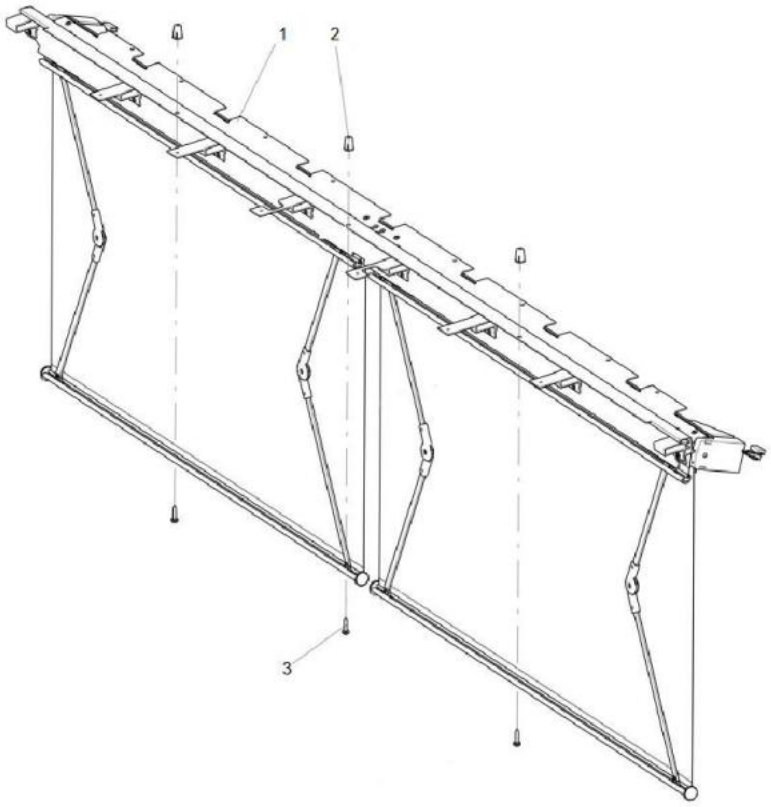

1. Front sunshade assembly 2. Plastic nut seat cross recessed pan head screw 3. Cross head pan head tapping screw

Remove the sunshade assembly

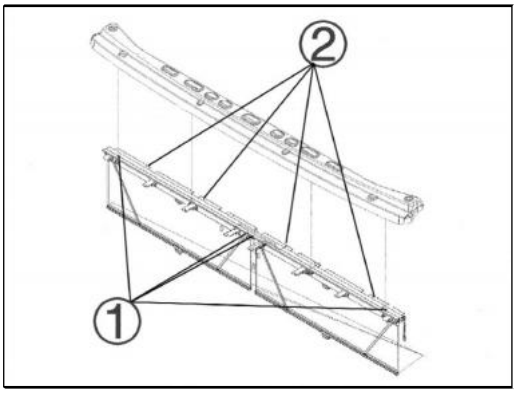

Removal steps

1. Remove four M6*20 cross recessed pan head screws ① and eight M4.8*16 cross recessed pan head tapping screws ② with a cross head screwdriver, and take out the sunshade assembly.

Install the sunshade assembly

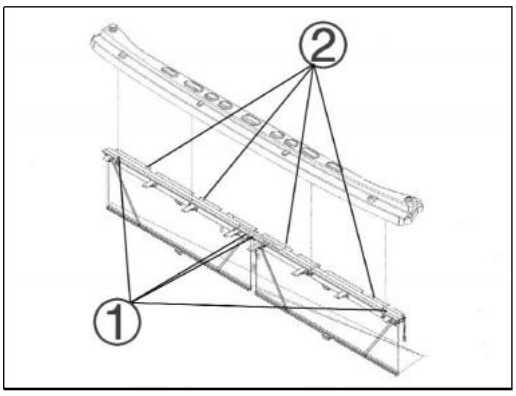

Installation steps

1. Install the sunshade assembly on the upper body of the cab front wall, and tighten the four M6*20 cross recessed pan head screws ① and the eight M4.8*16 cross recessed pan head tapping screws ② with a cross head screwdriver.

Remove the curtain guide rail sub-assembly

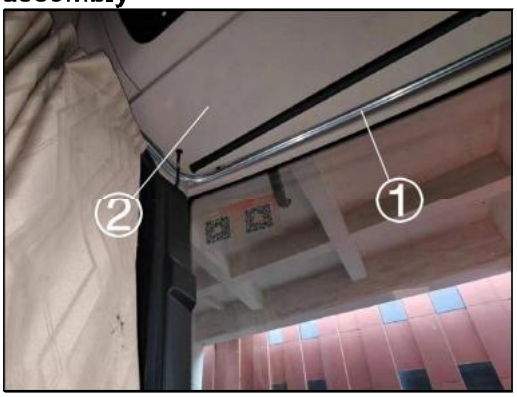

Removal steps

1. Remove the curtain guide rail sub-assembly ① along the middle of the cab lower floor ② to both sides with a rocker.

Remove the curtain assembly

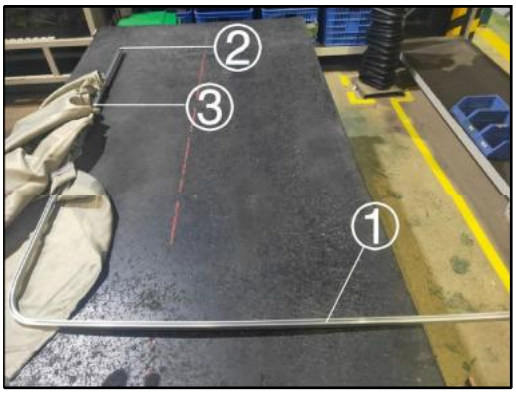

1. Remove the guide rail plug ② at one end of the guide rail ① with a rocker, and remove the curtain slider ③ together with the curtain from the curtain guide rail ①.

Install the curtain assembly

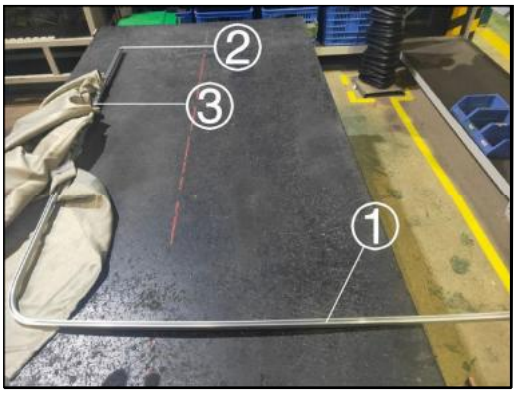

Installation steps

1. Install the curtain and curtain slider ③ into the curtain guide rail at one end of the curtain guide rail ①.
2. Install the guide rail plug ② at the end of the guide rail ①.

Install the curtain guide rail sub-assembly

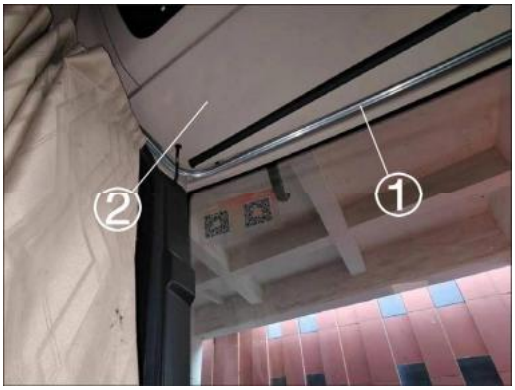

1. Align the mounting groove on the curtain guide rail ① with the claws on the circumference and the lower base plate ②, and insert the claws into the mounting groove in turn with a rubber hammer and a flat-blade screwdriver.

Circumferential trim

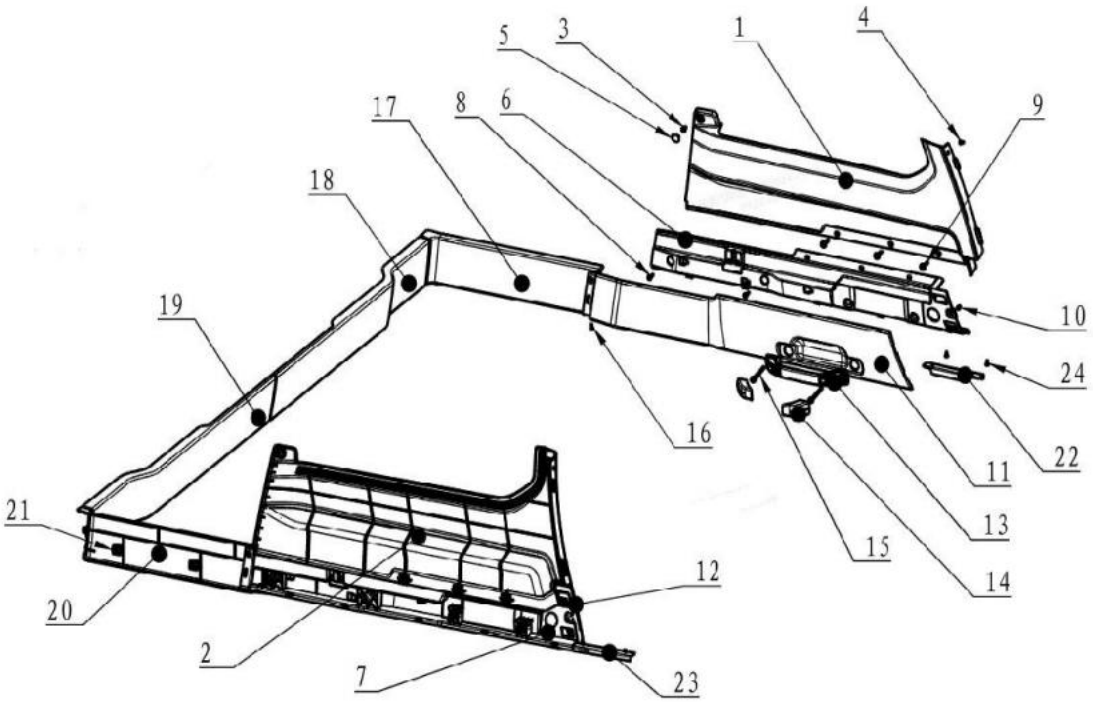

1.Left sleeper curtain box 2.Right sleeper curtain box 3.Cross recessed pan head tapping screw (M4.8*16) 4.Cross recessed panel head tapping screws (M4.2*13) 5.Cap 6.Left handle inner support plate 7.Right handle inner support plate 8.Cross recessed pan head tapping screw (M4.8 * 25) 9.Cross recessed pan head tapping screw (M6.3 * 35) 10.Cross recessed pan head tapping screw (M4.2 * 13) 11. Left handle support outer trim panel 12.Right handle support outer trim panel 13.Handrail 14.Handrail cover 15. Cross recessed pan head screw 16. Cross recessed pan head tapping screw(M4.2 *13) 17.Left rear trim 18.Rear left trim assembly 19.Rear right trim assembly 20.Right rear trim 21.Claw X 22.Left curtain guide rail trim panel 23.Right curtain guide rail trim panel 24. Cross recessed pan head tapping screw

Remove the rear wall trim assembly



Removal steps

1. Remove the rear wall trim assembly ① with a rocker.

Remove the rear trim



1. Remove the rear trim ① with a rocker.

Remove the handle

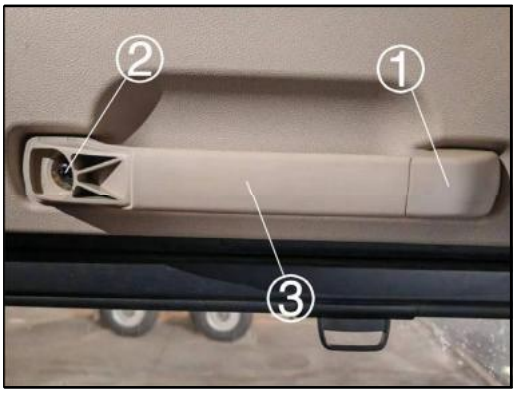

1. Remove the handle cover ① with a rocker.
2. Remove the M6*65 cross recessed pan head screw ② with a cross head screwdriver, and take out the handle ③.

Remove the handle support outer trim panel

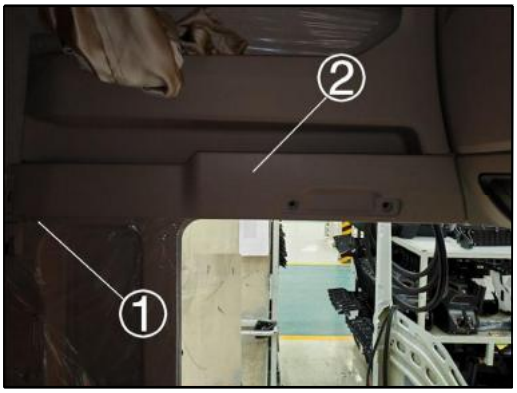

1. Remove the M4.8*13 cross recessed pan head tapping screw ① from the bottom of the lower right corner of the guard with a cross head screwdriver, and remove the front guard ② backward.

Remove the inner support plate of the handle

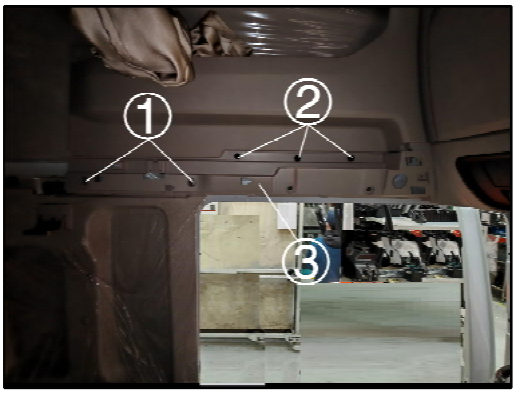

1. Remove the M4.8*25 cross recessed pan head tapping screw ① and M6*20 cross recessed pan head tapping screw ② with a cross head screwdriver, and take out the front trim ③.

Remove the sleeper curtain box



1. Remove the cap ② with a rocker, remove the three M4.2*16 cross recessed pan head tapping screws ① with a cross head screwdriver, and take out the sleeper curtain box ③.

Install the sleeper curtain box

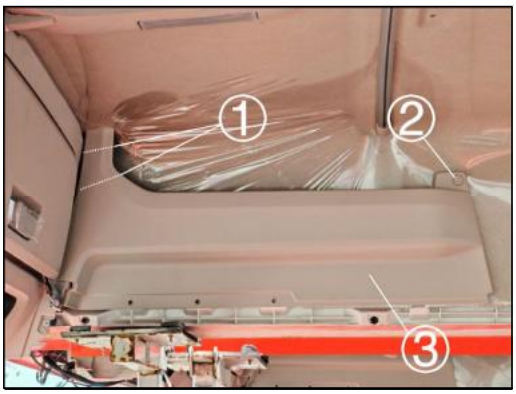

Installation steps

1. Install the front end of the sleeper curtain box ③ in the slot of the upper miscellaneous box, tighten the two M4.2*16 cross recessed pan head tapping screws ① with a cross head screwdriver, install the rear end of the sleeper box curtain ③ on the top cover body, tighten one M4.2 * 16 cross recessed panel head tapping screw ① with a cross head screwdriver, and instal the cap ② in the screw mounting hole.

Install the handle inner support plate

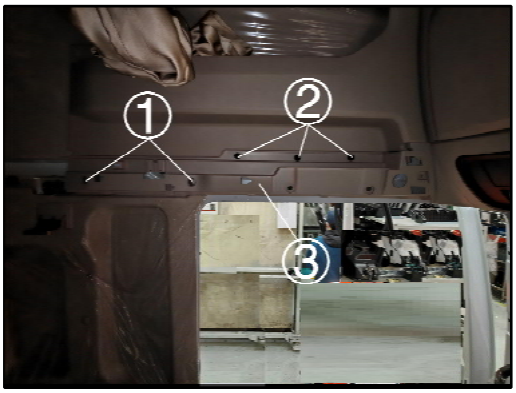

1. Instal the rear end of the handle inner support plate ③ on the body and the front end on the lower miscellaneous box. Use a cross head screwdriver to tighten the M4.8*25 cross recessed pan head tapping screw ① and the M6*20 cross recessed pan head tapping screw ②.

Install the handle support outer trim panel

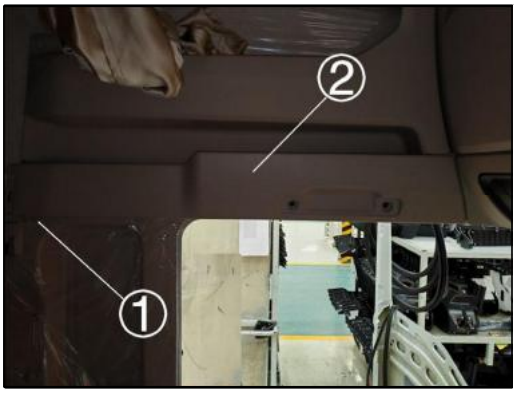

1. Clamp the front guard ② forward into the inner support plate according to the slot position of the inner support plate, and tighten the M4.8*13 cross recessed pan head tapping screw ① at the lower rear side of the outer support plate with a cross head screwdriver.

Install the handle

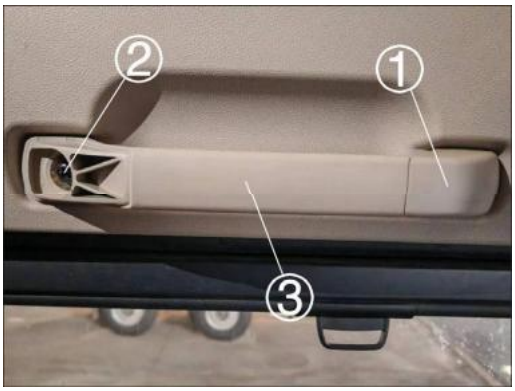

1. Install the handle ③ in the front guard, and use a cross head screwdriver to tighten the M6*65 cross recessed pan head screw ② to 9 ±0.9Nm. Install the handle cover ① outside the fixing bolt.

Install the rear trim



1. Install the rear trim ① in the claws installed on the rear cab body of the handle outer support plate ②, and overlap the front end with the handle outer support plates ②.

Install the rear wall trim assembly



1. Install the rear wall trim ① in the claw of the cab body rear wall mounting, lap it with the rear trim ②, and install the rear wall left trim first.

Pay attention to installation: when installing the circumferential trim, the clearance shall be uniform without leakage of the cab body.

Roof lining

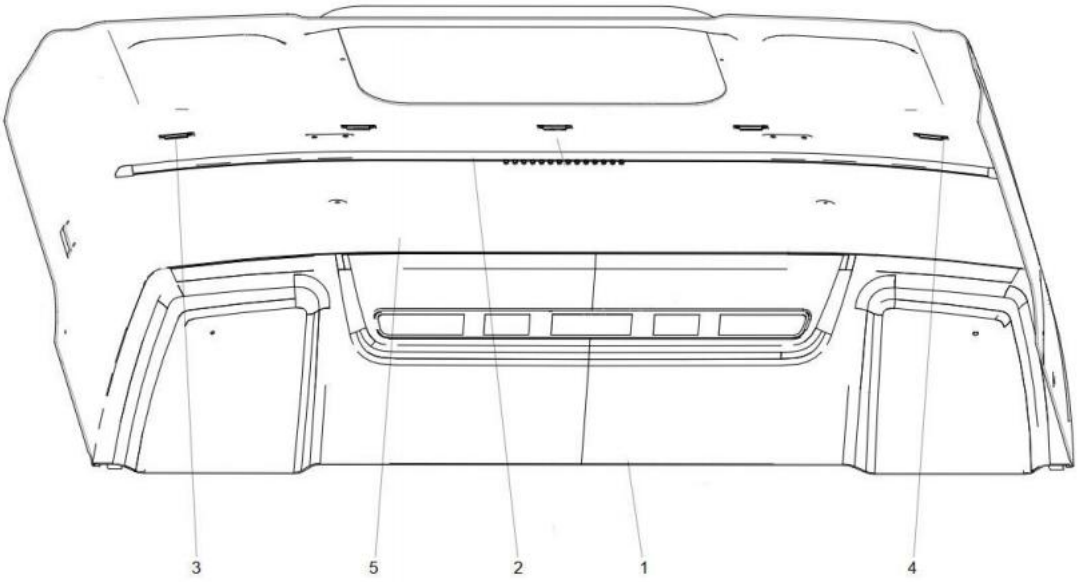

1. Wide body roof rear lining 2. Wide body high roof sleeper curtain guide rail 3. Curtain guide rail support 4. Cross recessed pan head tapping screw 5. Top cover lining

Remove the sleeper curtain rail



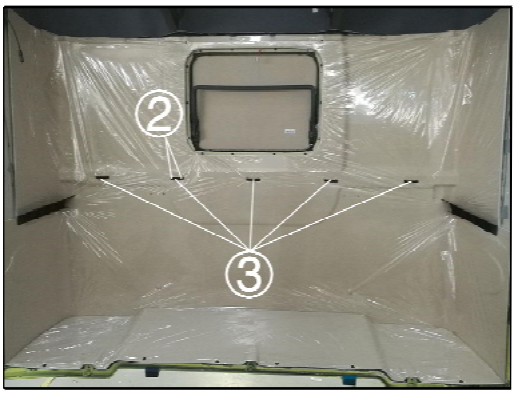

Removal steps

1. Remove the sleeper curtain rail ① with a rocker.

2. Remove the M4.2*13 cross recessed pan head tapping screw ② with a cross head screwdriver, and take out the curtain rail support ③.

Remove the roof rear wall lining

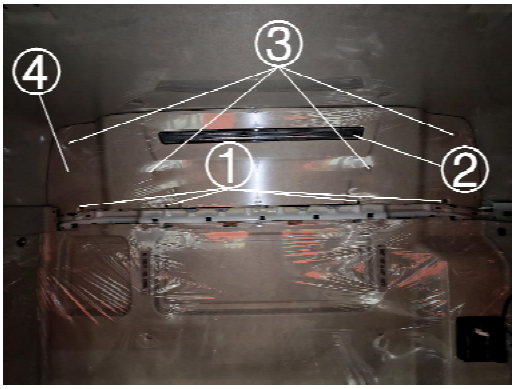

1 Remove the M4.8*16 cross recessed pan head tapping screw ① with a cross head screwdriver.

2. Remove the rear wall interior lamp ② with a rocker, remove the lamp harness, and take out the rear wall interior lamp.

3. Remove the plastic split rivet ③ with a rocker, and take out the roof rear wall lining ④.

Removal of roof lining

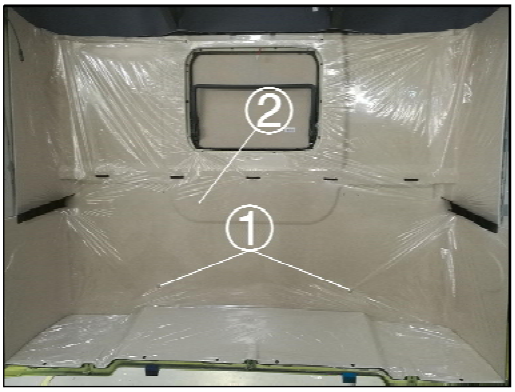

1. Remove the plastic split rivet ① with a rocker, and take out the roof lining ②.

Installation of roof lining

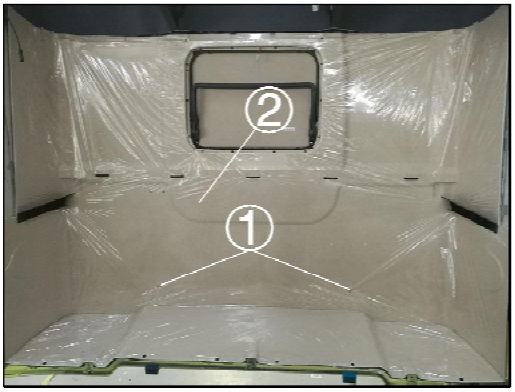

Installation steps

1. Install the roof liner ② on the inner side of the top cover, with the side with the sunroof mounting hole at the front end, and fix it with a plastic tail ①.

Install the roof rear wall lining

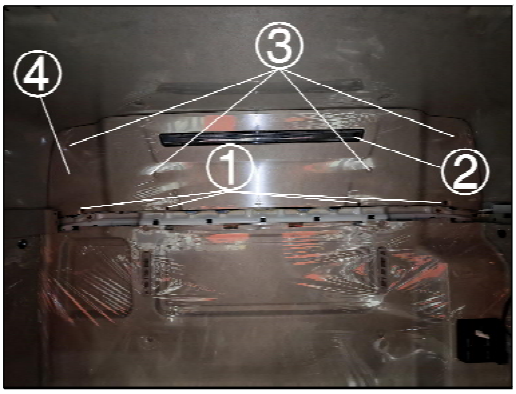

1. Install the roof rear wall lining ④ on the inner rear elevation of the roof and fix it with plastic split rivets ③.
2. Connect the rear wall interior lamp harness, and install the rear wall interior lamp ② on the inner rear elevation of the top cover.
3. Use a cross head screwdriver M4.8*16 cross recessed pan head tapping screw ① to fasten the lower edge of the roof rear wall lining to the top cover.

Install the sleeper curtain rail

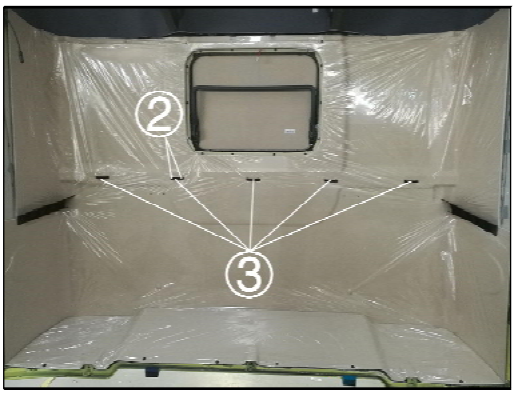



1. Install the curtain rail support ③ on the roof lining, and tighten the M4.2*13 cross recessed pan head tapping screw ② with a cross head screwdriver.
2. Use a rubber hammer and a slotted screwdriver to install the sleeper curtain guide rail ① on the guide rail support.

Rear wall lining

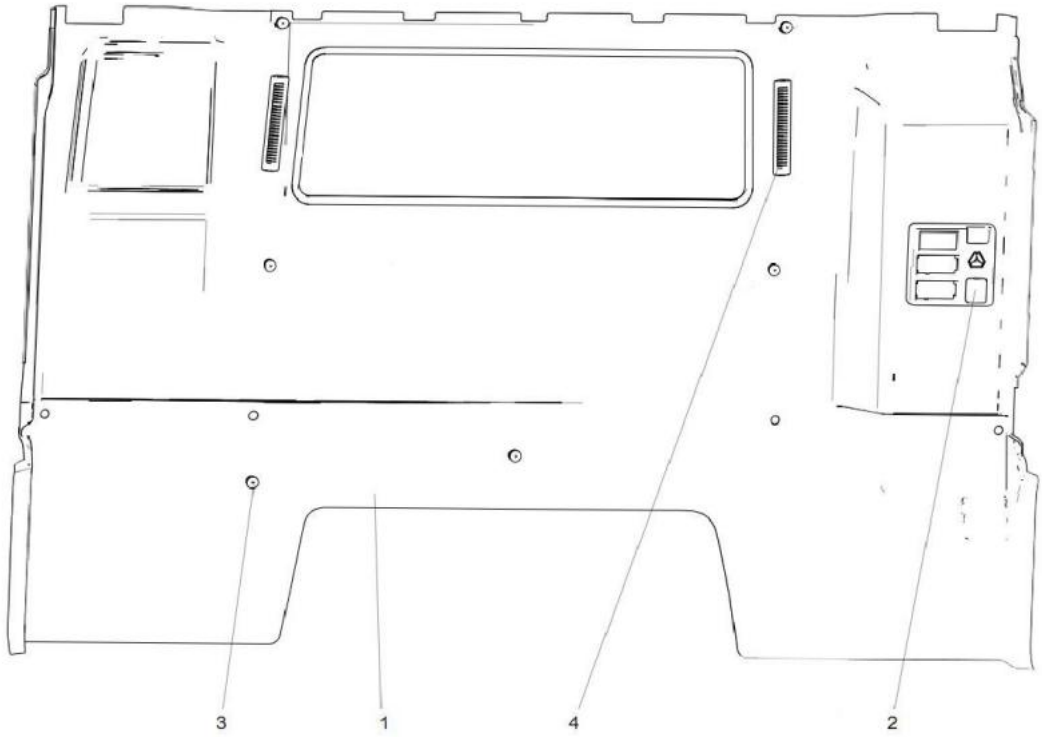

1. Rear wall lining 2. Reading lamp mounting cover 3. Plastic split rivet 4. Clamping air outlet

Remove the rear wall lining

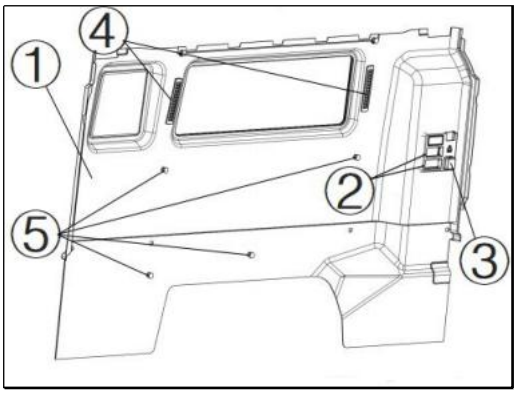

Removal steps

1. Remove the clamping split ④ with a rocker.
2. Remove the plastic split rivet ⑤ with a rocker.
3. Remove the rear wall rocker switch ② with a rocker, take out the rocker switch harness, and take out the rocker switch.
4. Remove the reading lamp mounting cover ③ with a rocker, remove the M4*10 cross recessed pan head screw with a Phillips screwdriver, and remove the reading lamp.
5. Remove the rear wall lining ①.

Install the rear wall lining

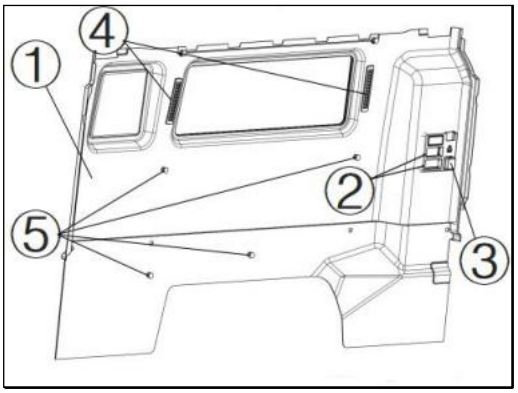

Installation steps

1. Install the rear wall lining ① to the rear wall of the cab body, and throw out the rear wall rocker switch harness in the mounting frame before installation.

2. Fix the rear wall lining ① to the cab body with plastic split rivets ⑤.

3. Install the clamping air outlet ④ into the mounting hole of the rear wall lining.

4. Connect the rear wall rocker switch harness, and install the rocker switch ② in the lining switch mounting hole.

5. Connect the reading lamp harness, tighten the M4*10 cross recessed pan head screw with a cross head screwdriver, and clamp the reading lamp mounting cover ③ to the outside of the reading lamp mounting hole.

Side wall lining

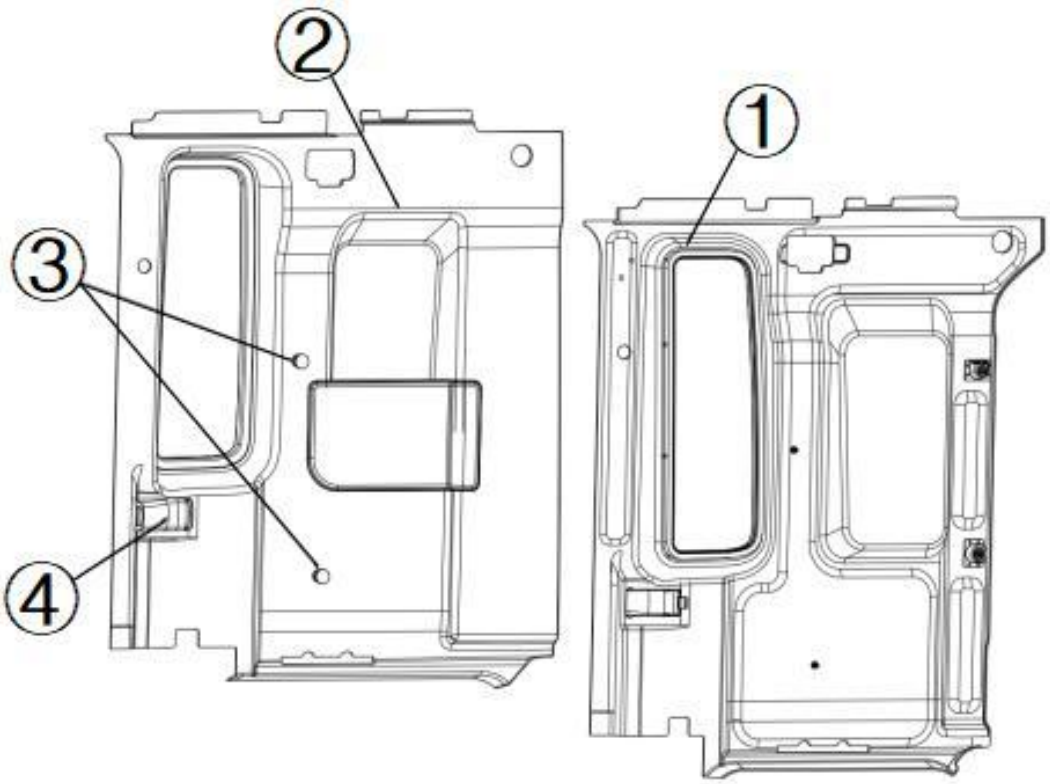

1. Left side wall lining assembly 2. Right side wall lining assembly 3. Plastic split rivet 4. Grab handle frame

Remove the B-pillar handle

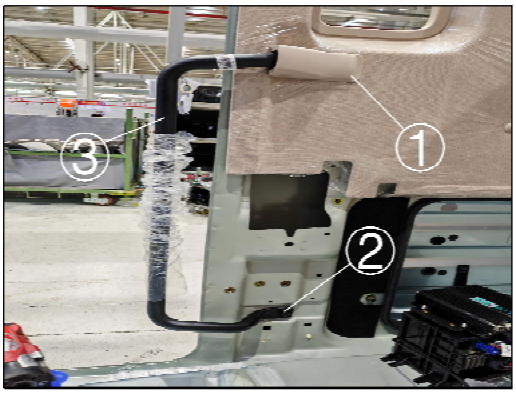

Removal steps

1. Remove the grab handle frame ①.
2. Remove the M8*25 hexagon head bolt ② with a 13mm socket wrench, and take out the B-pillar handle ③.

Remove the side wall lining



1. Remove the plastic split rivet ① with a rocker, and take out the side wall lining ②.

Install the side wall lining

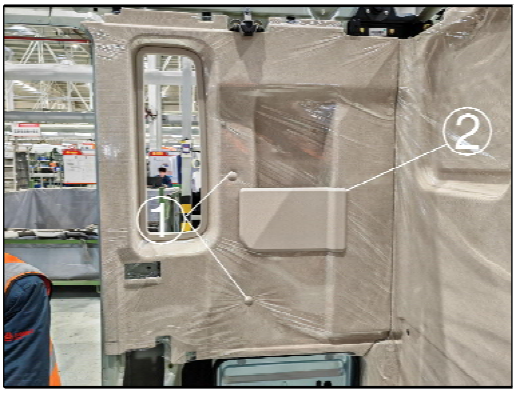

Installation steps

1. Install the side wall liner ③ on the body side wall and push it back to the bottom, clamp the locating pin in the body mounting hole, and the side wall liner clings to the rear wall liner. The front part of the lining is pressed against the lower end of the door frame sealing strip after assembly.

2. Fix the side wall liner to the body with plastic split rivets ①.

Install the B-pillar handle

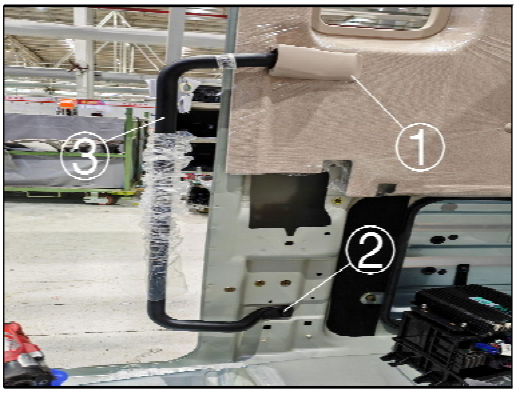

1. Install the B-pillar handle ③ into the mounting hole of the cab side wall body, and use a 13mm socket wrench to tighten the M8*25 hexagon head bolt assembly ② to 20±2Nm.

2. Install the grab handle frame ① into the mounting hole on the B-pillar handle, and clip the attached claws of the frame into the side wall lining.

Cab A/C

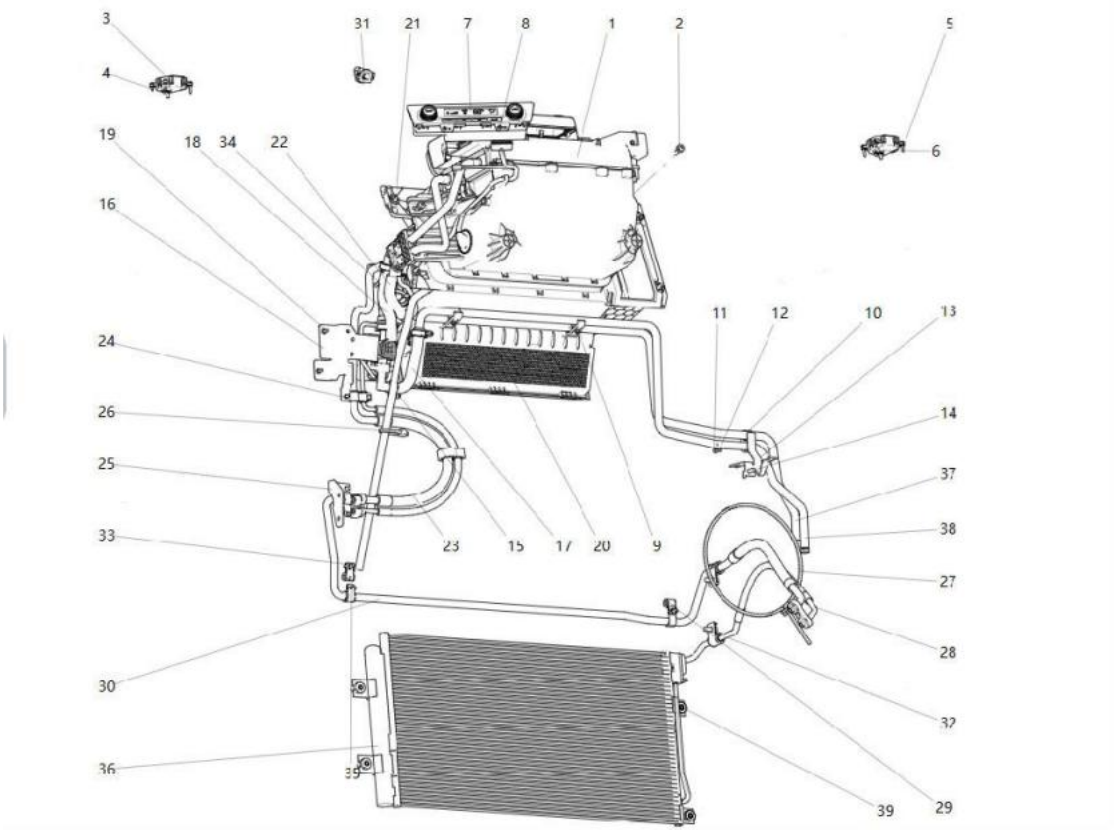

1. A/C assembly 2. Cross recessed pan head screw (M8*25) 3. Defroster actuator 4. Cross recessed pan heads tapping screw (M4.2*16) 5. Cross recessed pan head tapping screws (M4.8*22) 6. Cross recessed pan Head tapping screw assembly (M4.8 * 22) 7. Control panel 8. Cross recessed pan-head tapping screw(M4.2 * 16) 9. Fixing clip 10. Pipe clamp 11. Hexagon nut M6 12. Plain washer 13. Bracket assembly 14. Cross recessed panel head screw (M8 * 25) 15. Waveform spring clamp 16. Water valve assembly 17. Water valve outlet pipe 18. Water valve inlet pipe 19. Hexagon flange bolt (M6*16) 20. Filter system assembly 21. Hexagon flange bolts (M8*35) 22. Molded hose 23. Evaporator line assembly 24. Double pipe clamp 25. Bracket 26. Round head tie 27. Plastic fastening tape 28. Pressure cooling pipe assembly 29. Cold steam pipe assembly 30. Steam pressure pipe assembly 31. Indoor temperature sensor 32. Hexagon flange bolt (M10 * 20) 33. Hexagon flange bolt (M8 * 20) 34. Hexalobular socket head cap screw 35. Hexagon flange bolt (M6 * 20) 36. Condenser assembly 37. Hot water pipe 38. Cold water pipe 39. Hexagon flange bolt (M8 * 25)

Remove the evaporator line assembly

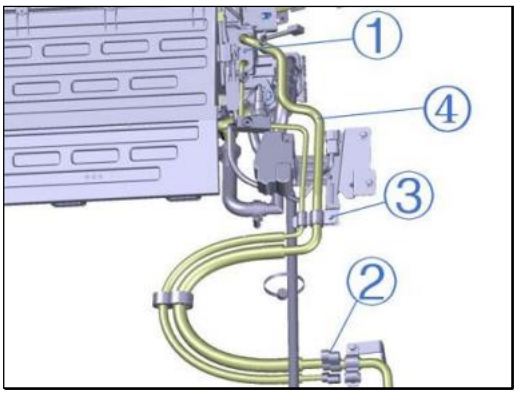

Removal steps

1. Remove the M6*25 hexagon socket head cap screw ① with a T30 socket wrench.

2. Remove the M8*25 hexagon flange bolt ③ with a 10mm socket wrench, and take out the double pipe clamp.

3. Remove the M8*50 hexagon flange bolt ② with a 10mm socket wrench.

4. Remove the pressure switch harness connector and the autoclave pipe assembly ④.

Note: When removing the evaporator line assembly, release the line pressure in advance.

Remove the hot and cold water pipes

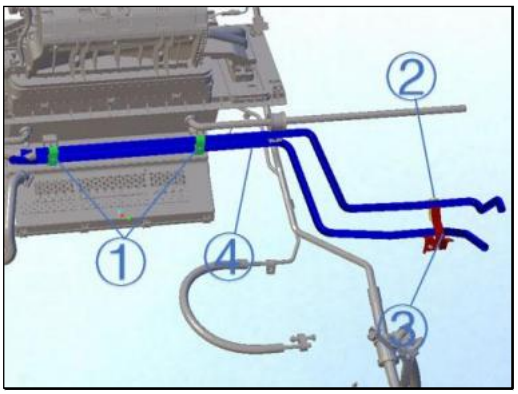

1. Remove the M4.8*22 cross recessed pan head screw with a cross head screwdriver, and take out the fixing clamp ①.

2. Remove the M6 flange nut with a 10mm socket wrench, and take out the pipe clamp ②.

3. Remove the M8*25 hexagon head bolt with a 13mm socket wrench, and take out the bracket assembly ③.

4. Remove the spring clamp with a 7mm socket, and take out the hot and cold water pipe ④.

Remove the water valve assembly

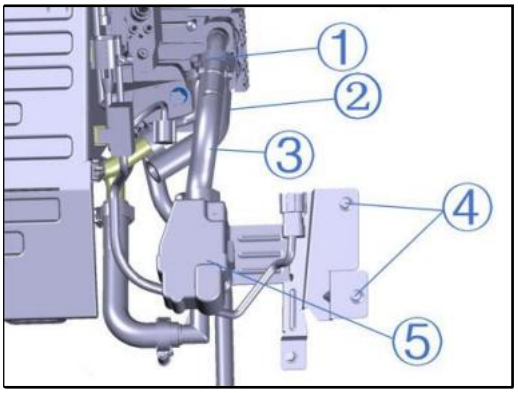

1. Remove the spring clamp ① with a 7mm socket, and take out the molding hose ①.

2. Remove the spring clamp with a 7mm socket, and take out the molding hose ③.

3. Remove the M8*25 hexagon flange bolt with a 10mm socket wrench, and take out the water valve assembly ④.

4. Remove the water valve assembly harness and take out the water valve assembly ⑤.

5. Remove the M4.8*25 cross recessed pan head screws with a cross head screwdriver, and take out the cover assembly.

Remove the filter assembly

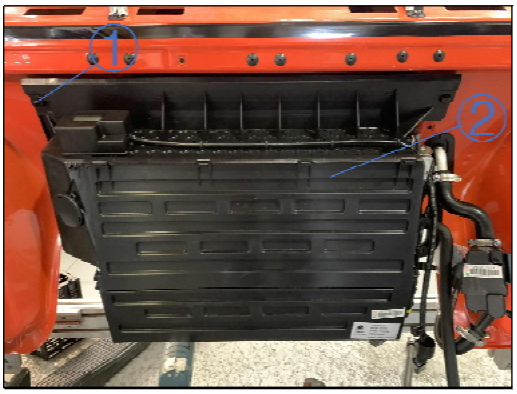

1. Remove the four M8*35 hexagon head bolts ① with a 13mm socket wrench.
2. Remove the filter assembly ②.

Remove the A/C assembly



1. Remove the M8*25 hexagon head bolt ② with a 13mm socket wrench.
2. Remove the A/C assembly ①.

Install the A/C assembly



Installation steps

1. Install the A/C assembly ① to the inside of the cab front wall module.
2. Use a 13mm socket wrench to tighten the M8*25 hexagon head bolt ② to 8±2Nm.

Install the filter assembly

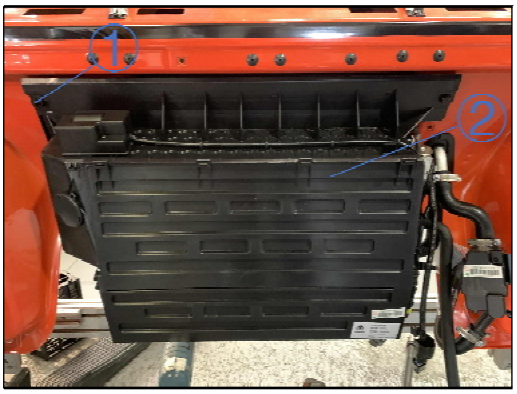

1. Install the filter assembly ① on the outside of the cab front wall module.
2. Use a 13mm socket wrench to tighten the four M8*35 hexagon head bolts ① to 8±2Nm.

Install the water valve assembly

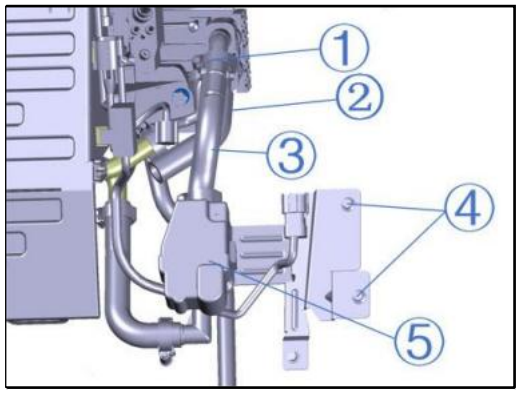

1. Install the cover assembly into the through hole of the front wall module A/C water pipe, and tighten the M4.8*25 cross recessed pan head screws with a cross head screwdriver.
2. Install the molding hose ② to the A/C drain pipe interface, and tighten the spring clamp with a 7mm socket to 5.5±0.5Nm.
3. Install the molding hose ③ to the A/C upper water pipe interface, and tighten the spring clamp with a 7mm socket to 5.5±0.5Nm.
4. Install the water valve assembly ⑤ on the front wall module, and use a 10mm socket wrench to tighten the M8*25 hexagon flange bolts to 20 ±2Nm.

Note: Tighten the spring clamp to the required torque to prevent water leakage.

Installation of hot and cold water pipes

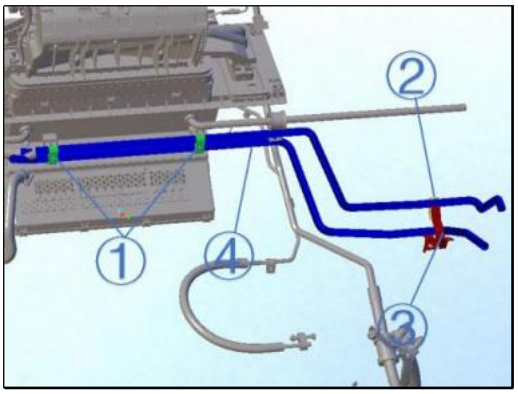

1. Install the cold and hot water pipe ④ at the formed hose connected from the cab A/C, and tighten the spring clamp of the cold and hot water pipes to 5.5±0.5Nm with a 7mm socket.

2. Install the bracket assembly ③ on the cab right front suspension upper bracket, and use a 13mm socket wrench to tighten the M8*25 hexagon head bolt to 20±2Nm.

3. Fasten the lower sections of the cold and hot water pipes ④ to the bracket assembly ③ with the pipe clamp ②, and tighten the pipe clamp ② with a 10mm socket M6 flange nut to 10±1Nm.

4. Install the upper section of the hot and cold water pipe ④ at the bottom of the filter assembly, fix it with the fixing clamp ①, and tighten the M4.8*22 cross recessed pan head screw with a cross head screwdriver.

Note: Tighten the spring clamp to the required torque to prevent water leakage.

Install the evaporator line assembly

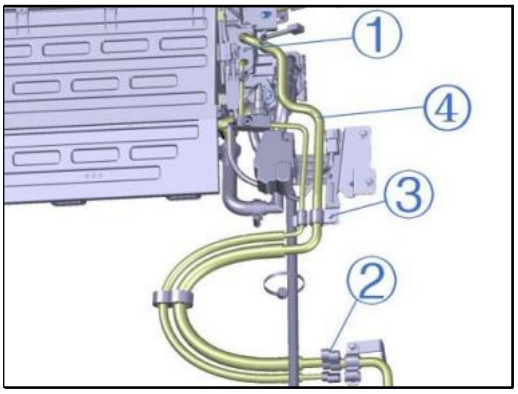

1. Install the evaporator line assembly ④ to the line connection port on the right side of the filter, and tighten the M6*25 hexagon socket head cap screw ① to 9±0.9Nm with a T30 socket.

2. Connect the evaporator line assembly ④ to the A/C line in the frame section, and use a 10mm socket wrench to tighten the M8*50 hexagon flange bolt ② to 24±2Nm.

3. Fix the middle position of the evaporator line assembly ④ on the water valve bracket with a double pipe clamp, and tighten the M8*25 hexagon flange bolt ③ to 16±2Nm with a 10mm socket wrench.

4. Connect and fix the pressure switch harness.

A/C compressor system

Remove the condenser pipe assembly

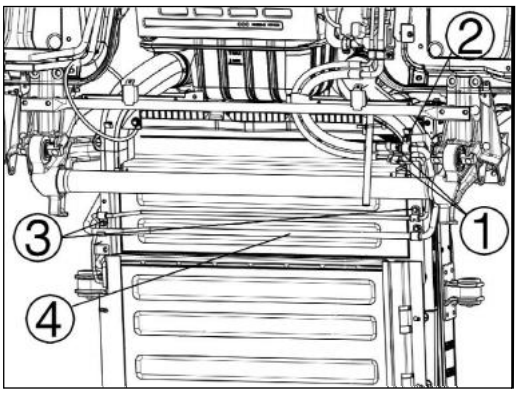

Removal steps

1. Remove the M8*45 hexagon flange bolt ① and M8*20 hexagon flange bolt ③ with a 10mm socket, and take out the double pipe clamp ② and the pipe clamp.

2. Remove the M6*25 hexagon flange bolt with an 8mm socket wrench, and remove the condenser pipe assembly ④.

Remove the compression cooling pipe assembly

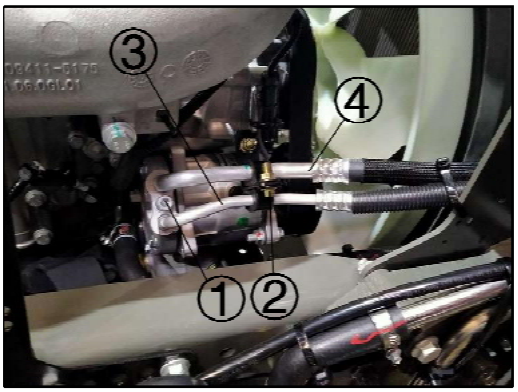

1. Remove the M8*35 hexagon socket head cap screw ① with an H6 socket head.

2. Remove the M8*25 hexagon flange bolt ② with a 10mm socket, and remove the compression cooling pipe assembly ③ and autoclave pipe ④.

Remove the ribbed belt

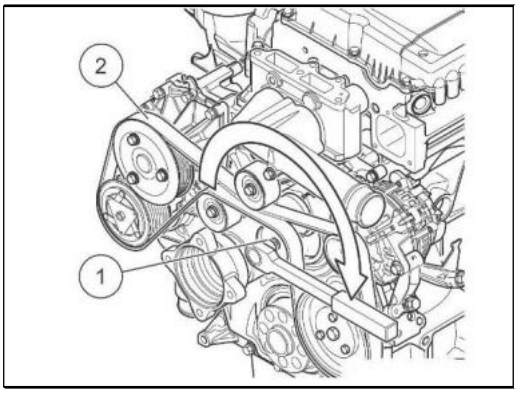

1. Rotate the tensioner ① clockwise to the stop, and take out the ribbed belt ②.

Remove the A/C compressor assembly

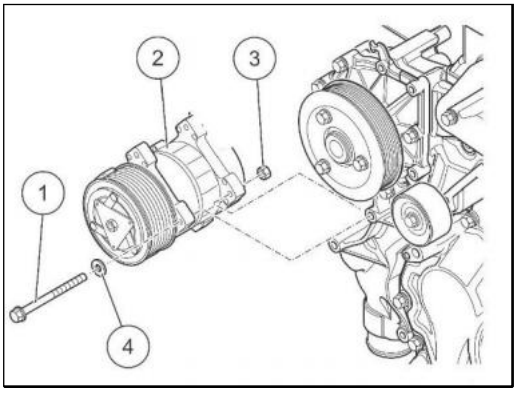

1. Remove the M10*130 hexagon socket round head bolt ① and M10 hexagon flange nut ③ with an H8 socket, and take out the A/C compressor ②.

Install the A/C compressor

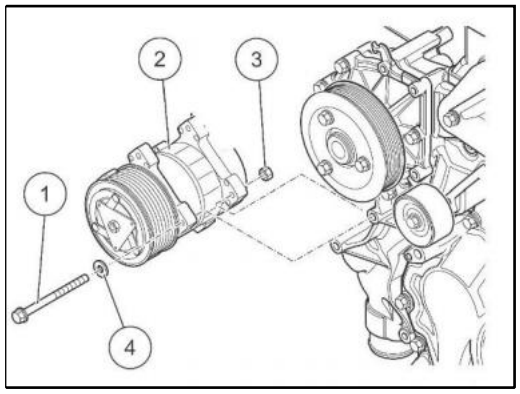

Installation steps

1. Fix the A/C compressor ② to the distribution housing, and tighten the M10*130 hexagon socket round head bolt ①, spacer ④ and M10 hexagon flange nut ③ to 40±4Nm with an H8 socket.

Install the ribbed belt

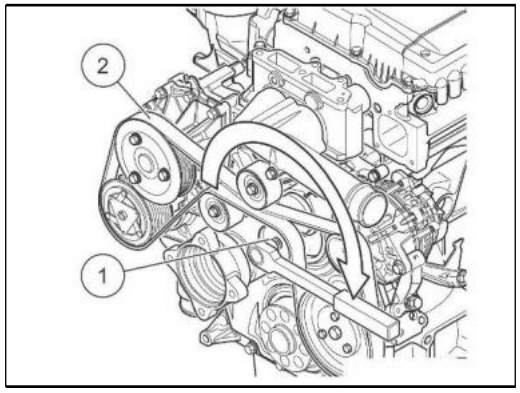

1. Rotate the tensioner ① clockwise to the stop.
2. Install the ribbed belt ②.

Installation of compression cooling pipe assembly

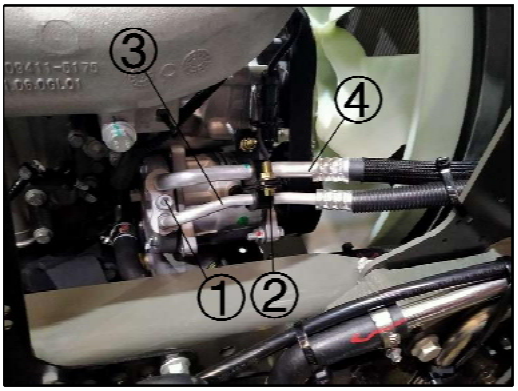

1. Install the compression cooling pipe assembly ③ and the autodlave pipe assembly ④ on the A/C compressor, and tighten them with H6 socket M8*35 hexagon socket head cap screw ① to 25 ±3Nm.

2. Use a 10mm socket wrench to fix the M8*25 hexagon flange bolt ② to the line clamp with a tightening torque of 24±2Nm.

Install the condenser pipe assembly

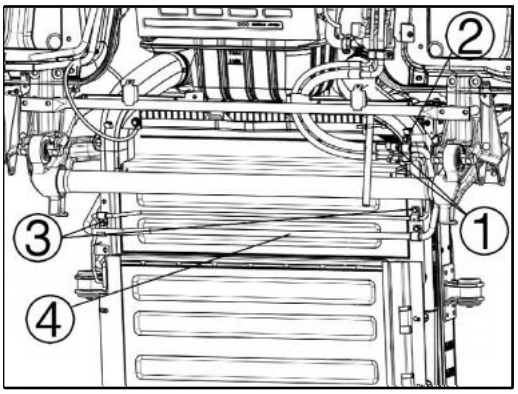

1. Connect the upper end of the condenser pipe assembly ④ to the evaporator line, and use a 10mm socket wrench to tighten the M8*45 hexagon flange bolt ① to 24±2Nm.

2. Install the lower end of the condenser pipe assembly ④ at the condenser interface, install the double pipe clamp ② and the pipe clamp on the line, and tighten the M8*20 hexagon flange bolt to 24±2Nm with a 10mm socket, and tighten the M6*25 hexagon flange bolt ③ to 10±1Nm with an 8mm socket.

Air heater system

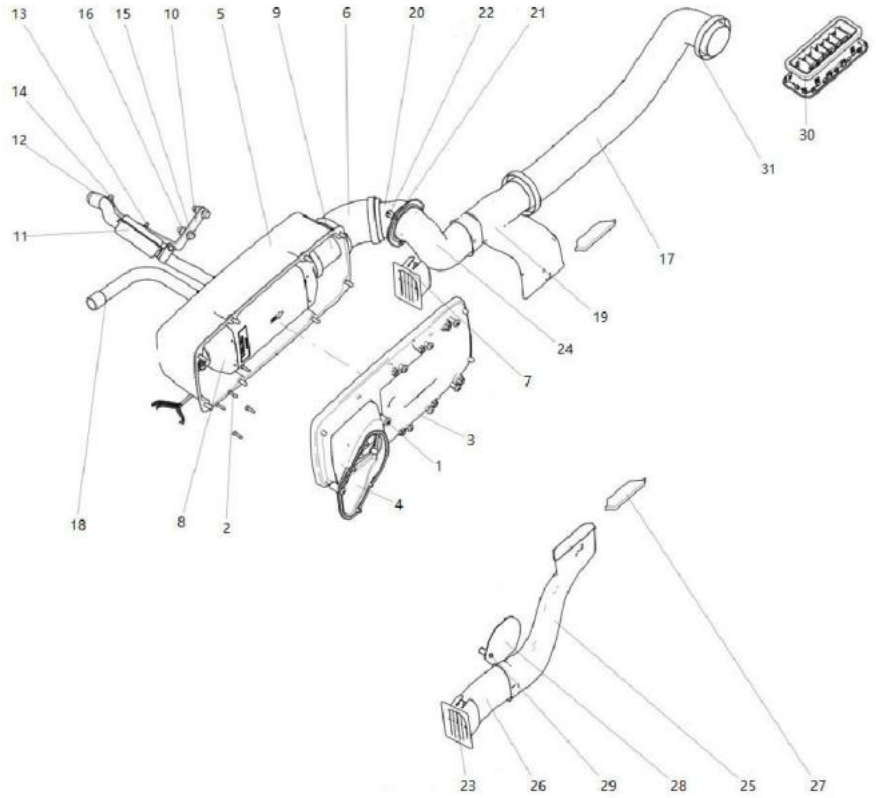

1. Round head bolt 2. Hexagon socket tapping screw 3. Heater upper cover 4. Suction bell mouth 5. Heater lower cover 6. Transition elbow 7. Air outlet (front passenger's side) 8. Heater 9. Air outlet pipe 10. Independent heater exhaust pipe bracket 11. Exhaust pipe assembly 12. Clamp 13. Hexagon flange bolt M6 14. Hexagon flange serrated bolt M8 15. Hexagon flange with serrated bolt M10 16. Hexagon flange serrated nut M10 17. φ75 corrugated pipe 18. Intake pipe assembly 19. Air distributor (wide body) II 20. Hot air elbow 21. Cross recessed pan head tapping screw 22. Plastic nut seat 23. Air outlet (driver's side) 24. Air distributor (width body) 25. Left duct (wide body) 26. Seat duct (wide body) 27. Sealing block 28. Cover 29. Cross recessed pan head tapping screw 30. Independent heater air outlet 31. Hose clamp

Remove the air distributor

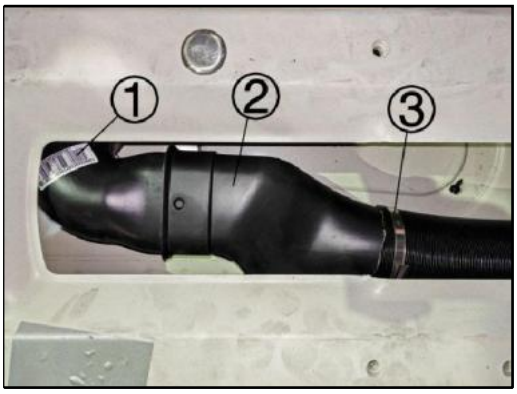

Removal steps

1. Remove the hose clamp ③ with a 7mm socket wrench, take out the air distributor Ⅱ ②, and take out the air distributor Ⅰ ①.

Remove the driver's side duct

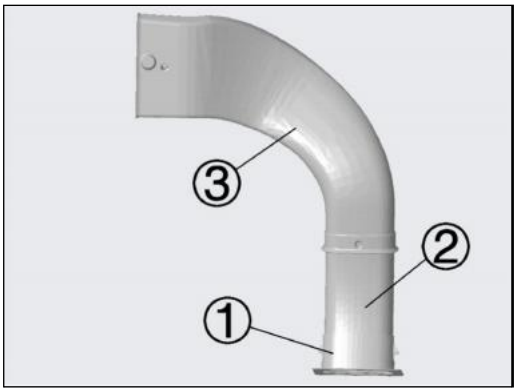

1. Remove the air outlet (driver's side) ① with a rocker, and take out the seat duct ② and left duct ③.

Remove the toolbox heat shield

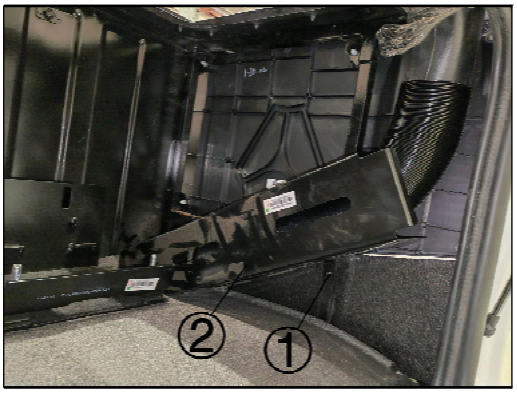

1. Remove three M4.2*13 cross recessed pan head tapping screws ① with a cross head screwdriver, and take out the toolbox heat shield ②.

Remove the corrugated pipe

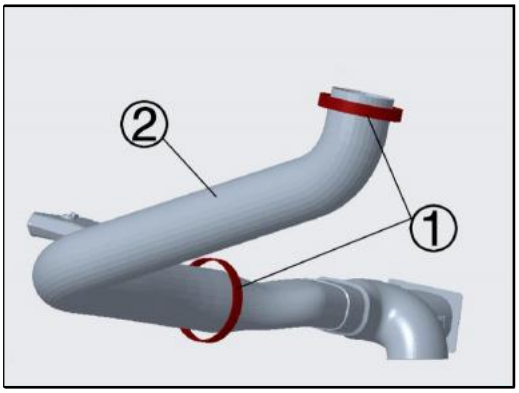

1. Remove the hose clamp ① with a 7mm socket wrench, and remove the bellows ② from the inside of the toolbox.

Remove the exhaust pipe bracket

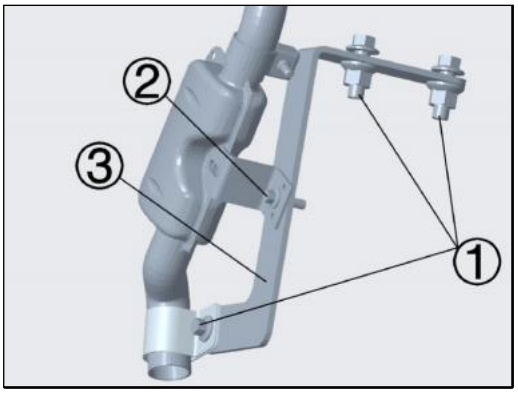

1. Remove the M8*20 hexagon flange bolt ① with a 10mm socket wrench, remove the M6*20 hexagonal flange bolt ② with an 8mm socket wrench, and take out the exhaust pipe bracket ③.

Remove the intake and exhaust pipes

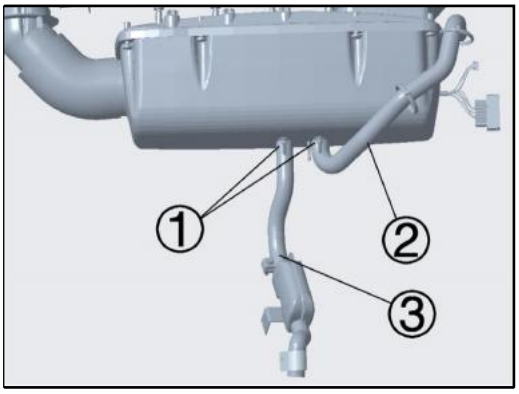

1. Remove the hose clamp ① with a 7mm socket, and take out the exhaust pipe ③ and intake pipe ②.

Remove the independent heater sub-assembly

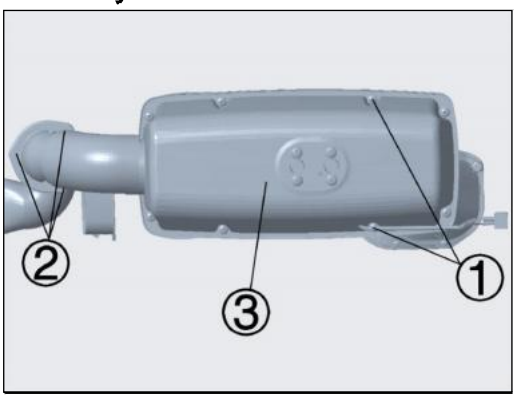

1. Remove the three M4.8*25 cross recessed pan head tapping screws ② with a cross head screwdriver.
2. Remove the eight M6*25 pattern bolts ① with a T30 Torx bit socket, and take out the independent heater sub-assembly ③.

Remove the hot air elbow

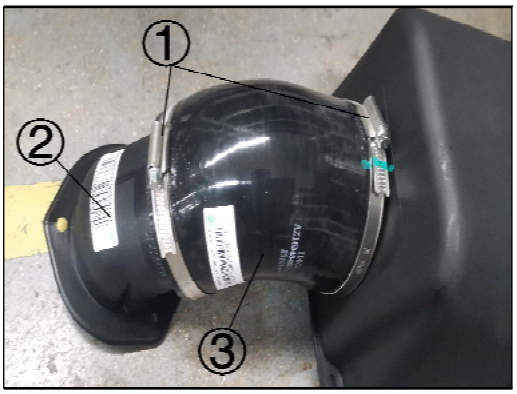

1. Remove the hose clamp ① with a 7mm socket, and take out the hot air elbow ② and transition elbow ③.

Removal of heater

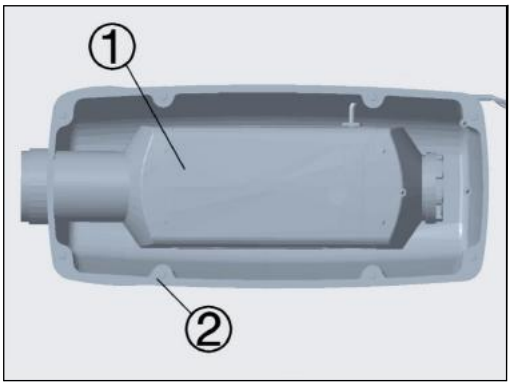

1. At the bottom of the heater lower cover ②, take out the four M6 hexagon flange nuts with a 10mm socket wrench, and take out the heater ①.

Remove the heater upper cover

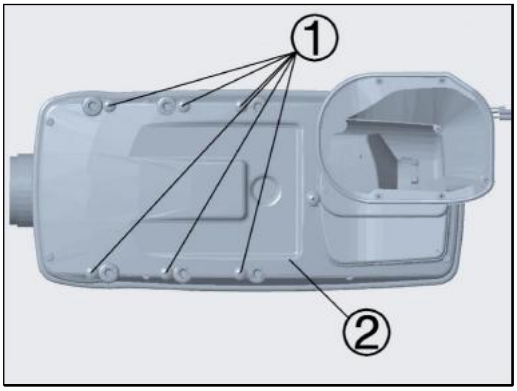

1. Remove the M6*25 pattern bolt ① with a T30 socket, and take out the heater upper cover ② from the bottom of the cab.

Install the heater upper cover

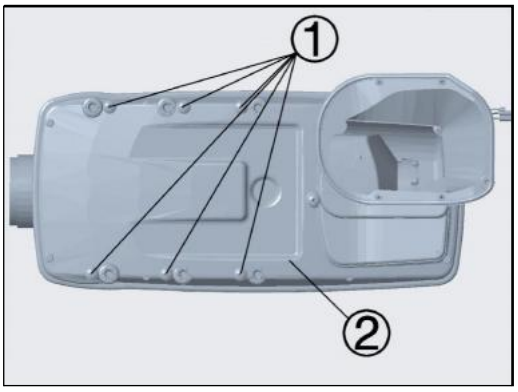

Installation steps

1. Install the heater upper cover ② on the right front bottom of the cab body, and tighten the M6*25 pattern bolt ① with a T30 socket.

Install the heater

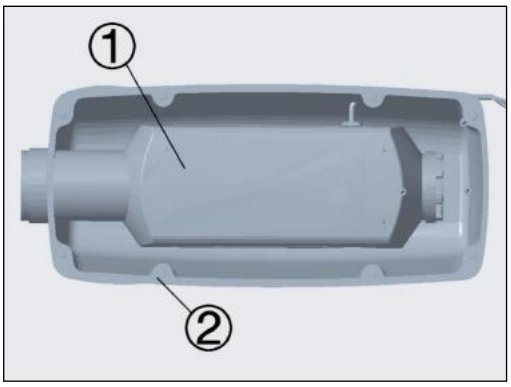

1. Install the heater ① in the heater lower cover ②, and use a 10mm socket wrench to tighten the M6 hexagon flange nut at the bottom to 10±1Nm.

Install hot air elbow

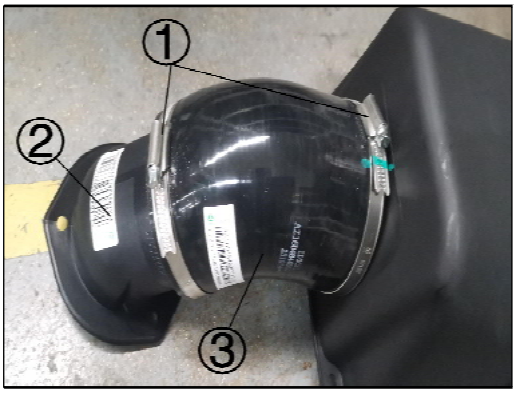

1. Connect the hot air elbow ② and the transition elbow ③ to the outside of the heater bottom shell, connect them with the heater air outlet pipe, and tighten the hose clamp with a 7mm socket to 5-7Nm.

Install independent heater sub-assembly

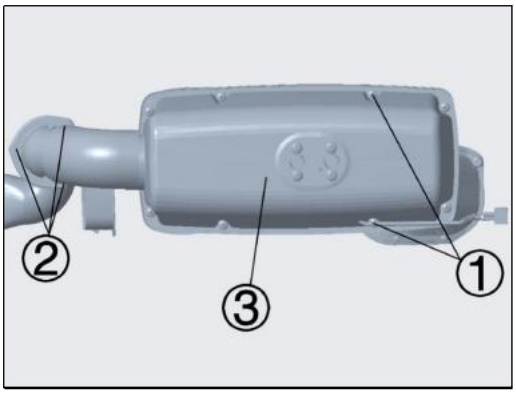

1. Connect the heater lower cover in the independent heater sub-assembly ③ to the heater upper cover, and tighten the M6*25 pattern bolt ① with a T30 socket.

2. Install the hot air elbow at the reserved air inlet of the cab body, and tighten the M4.8*25 cross recessed pan head tapping screw ② with a cross head screwdriver.

Install the intake and exhaust pipes

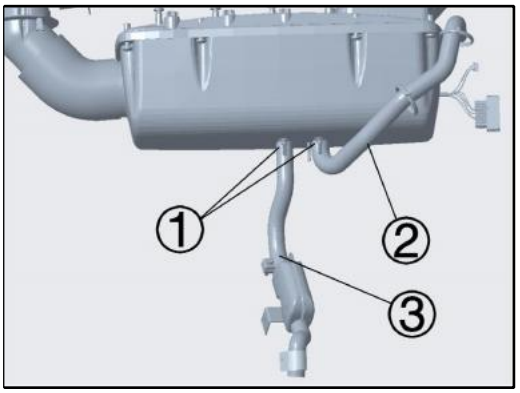

1. Use a 7mm socket wrench to loosen the self-contained throat clamp bolts of the intake pipe ③ and exhaust pipe ①, insert them into the air inlet and exhaust port of the heater at the correct position, and tighten the throat clamp to 6±1Nm.

Note: The intake pipe is on the front side and the exhaust pipe is on the rear side.

Install the exhaust pipe bracket

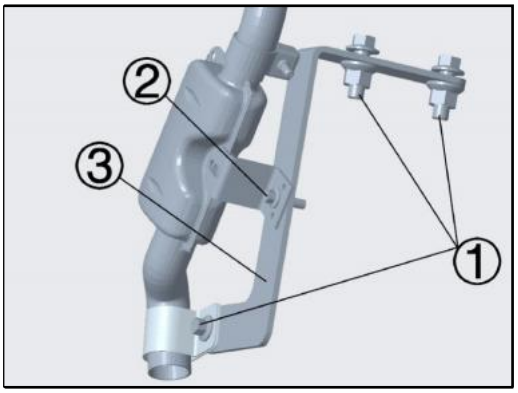

1. Install the upper end of the exhaust pipe bracket ③ on the right fender bracket, and use a 10mm socket wrench to tighten the M8*20 hexagon flange bolt ① to 20±2Nm.

2. Fix the bracket attached to the exhaust pipe on the exhaust pipe bracket, use a 10mm socket wrench to tighten the M8*20 hexagon flange bolt ① to 20±2Nm, and use an 8mm socket wrench to fasten the M6*20 hexagonal flange bolt ② to 10 ±1Nm.

Installation of bellows

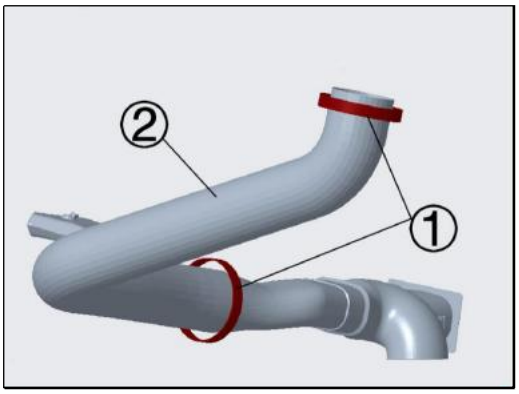

1. Attach the bellows to the lower interface of the side wall lining on the toolbox side. Use a 7mm socket to tighten the clamp, and leave the other end positioned under the front passenger seat.

Install the toolbox heat shield

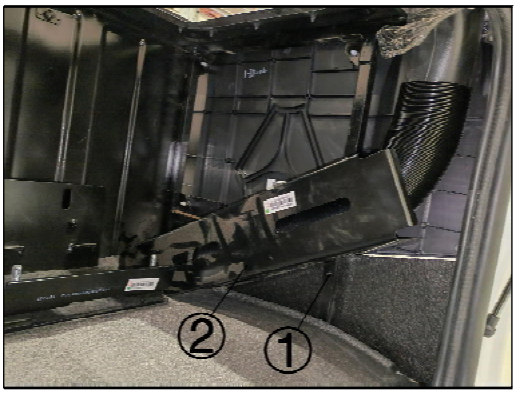

1. Install the toolbox heat shield on the inner front elevation of the toolbox, and tighten the M4.2*13 cross recessed pan head tapping screw ① with a cross head screwdriver.

Install the duct on driver's side

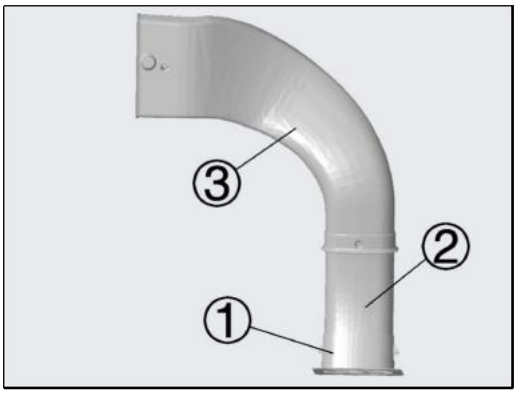

1. Clamp the left duct ③ into the corresponding hole of the cab body, and connect the other end with the seat duct ②.
2. The air outlet (driver's side) ① is installed at the front end of the seat duct and outside the floor mat.

Install the air distributor

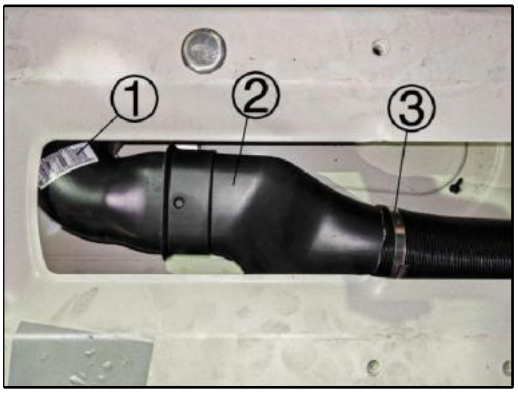

1. Install the air distributor Ⅰ ① under the co-driver's seat, connect the lower end to the hot air elbow, and connect the rear end to the air distributor Ⅱ ②.
2. Connect the rear end of air distributor Ⅰ ② to the corrugated pipe, and tighten the hose clamp ③ with a 7mm socket.

Water heater system

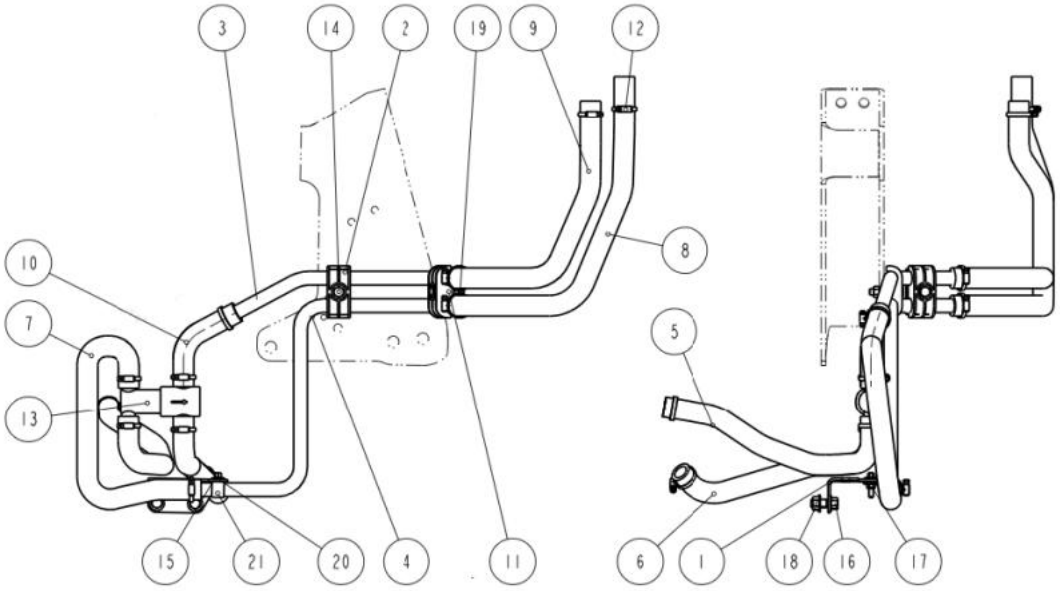

1. Heater water pipe bracket 2. Double pipe clamp 3. Heater engine return water pipe 4. Heater engine inlet water pipe 5. Heater engine water outlet pipe 6. Heater engine water return pipe 7. Heater pressure reducing valve water outlet pipe 8. Heater cab water inlet pipe 9. Heater cab water return pipe 10. Heater pressure reducing valve return water pipe 11. Pad 12. Hose clamp 13. H-type pressure reducing valve 14. Hexagon head bolt 15. Hexagon flange bolt M6 16. Hexagon flange bolts M10 17. Hexagon flange nut M6 18. Hexagon flange nuts M10 19. All-metal hexagon lock nut 20. Large gasket 21. Single pipe clamp

Remove the cab heater water pipe

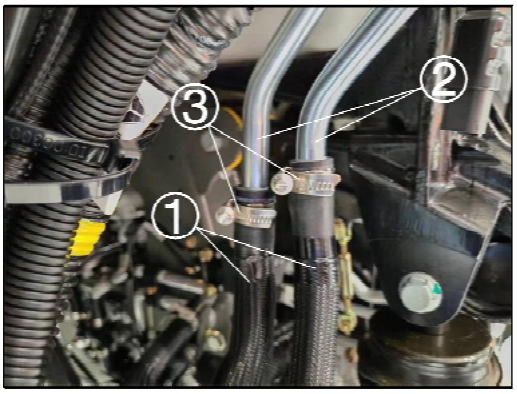

Removal steps

1. Remove the hose clamp ③ with a 7mm socket, and remove the cab end hose ① from the cold and hot steel pipe ②.

Remove the engine end heater water pipe

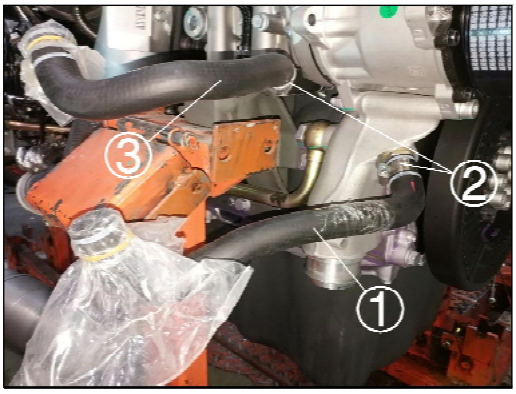

1. Remove the hose clamp ② with a 7mm socket, and take out the engine water outlet hose ③ and water return hose ①.

Remove the heater water pipe sub-assembly

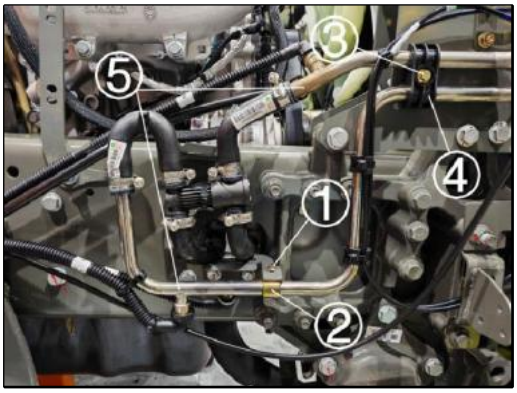

1. Remove the M8*45 hexagon flange bolt ③ with a 10mm socket, and take out the double pipe clamp ④.
2. Remove the M6*25 hexagon flange bolt ① with an 8mm socket wrench, take out the single pipe clamp ②, and remove the heater water pipe sub-assembly ⑤.

Install the heater water pipe sub-assembly

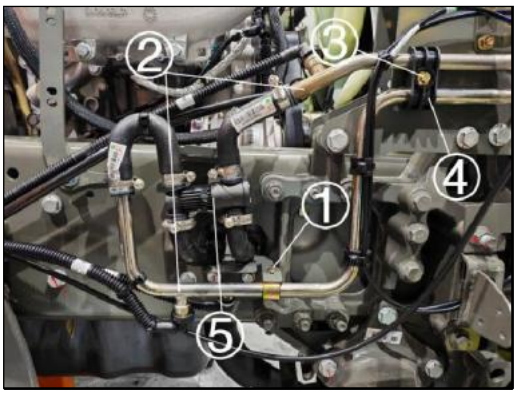

Installation steps

1. Connect the H-type pressure reducing valve ⑤ water pipe to the engine heater water pipe, install the hose horizontally in place, put the hose clamps at both ends of the hose, and tighten the clamps to 5.5±0.5Nm with a 7mm socket wrench.

2. Install the engine water outlet steel pipe on the heater water pipe bracket, and use an 8mm socket wrench to tighten the M6*25 hexagon flange bolt ① to 10±1Nm.

3. Fix the heater water pipe sub-assembly ② on the swing arm bracket with a double pipe clamp ④, and tighten the M8*45 hexagon flange bolt ③ to 24±2Nm with a 10mm socket.

Install the engine end heater hose

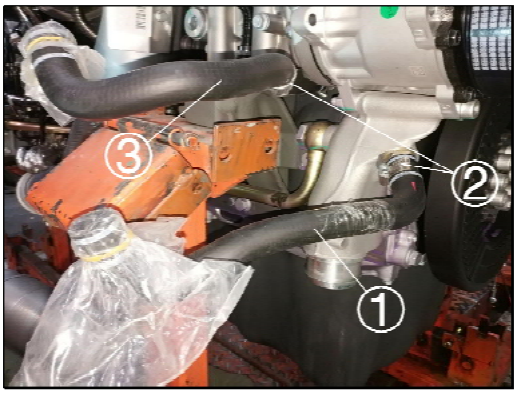

1. Connect the engine water outlet hose ③ and water return hose ① to the engine interface, put the hose clamp ② at both ends of the hose, and tighten the clamp with a 7mm socket to 5.5 ±0.5Nm.

Install the cab heater water pipe

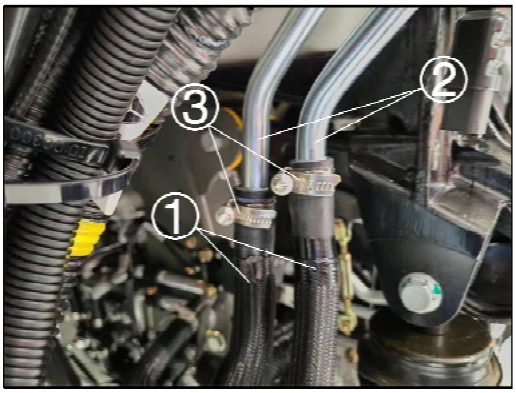

1. Connect the cab end heater hose ① to the cab end cold and hot steel pipe ②, put the hose clamps at both ends of the hose, and tighten the clamps with a 7mm socket to 5.5±0.5Nm.

Note: The clamp shall be assembled within the assembly line. It is strictly forbidden to fasten the clamp to the limit bulge of the hard tube, and the hose shall not collapse or rub against other parts.

Sound insulation material

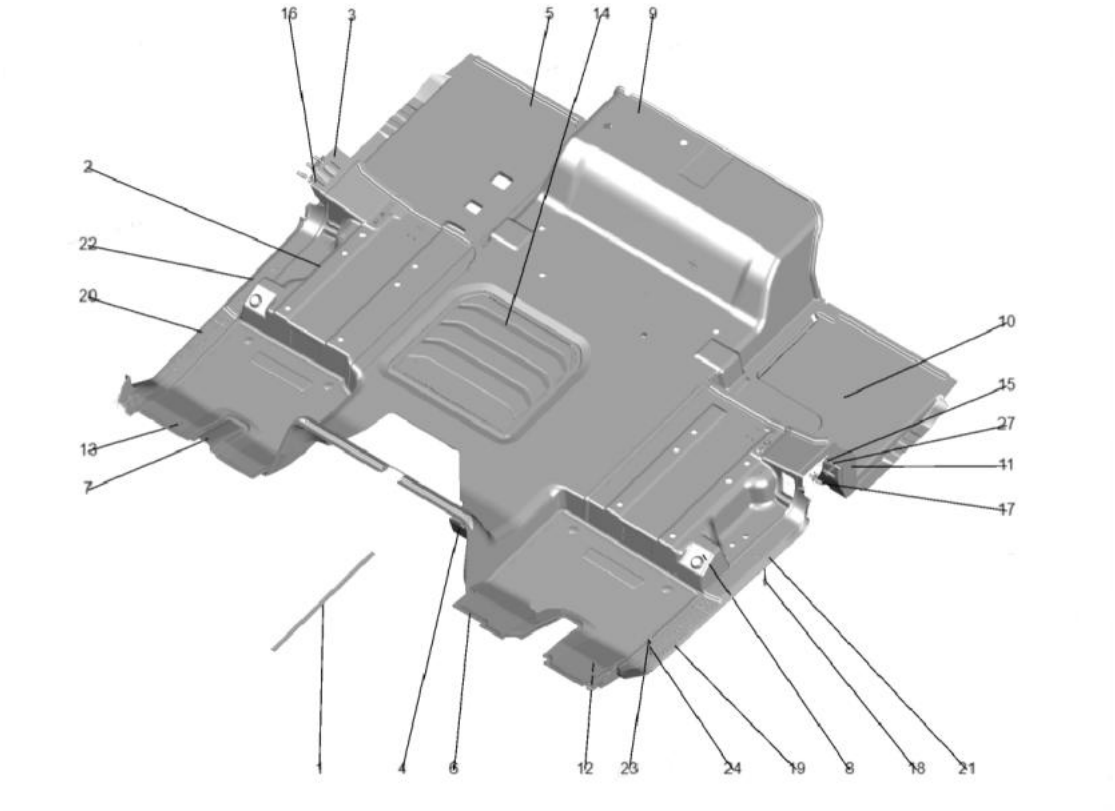

1. Velcro for SITRAK floor mat 2. C7 right rear floor mat 3. C7 wide right rear floor mat support Ⅰ 4. C7 wide right rear floor mat support Ⅱ 5. Right toolbox floor mat 6. C7 wide left front floor mat 7. C7 wide right front floor mat 8. C7 wide left rear floor mat 9. C7 wide hood liner 10. C7 wide left toolbox inner base plate 11. C7 wide left rear floor mat support 12. C7 left front carpet 13. C7 right front carpet 14. C7 middle carpet 15. Left bracket assembly 16. Right bracket assembly 17. Blind rivet nut M8 18. Blind riveted nut M8 19. C7 left front door sill 20. C7 right front door sill 21. C7 left rear door sill 22. C7 right rear door sill 23. SITRAK sill cap 24. Cross recessed pan head tapping screw and plain washer assembly

Removal of threshold

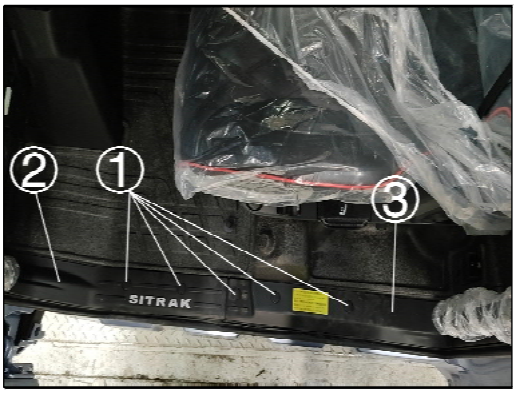

Removal steps

1. Remove the sill cap ① with a rocker, remove the M4.8*55 cross recessed pan head tapping screw with a cross head screwdriver, and take out the front sill ② and rear sill ③.

Remove the floor mat

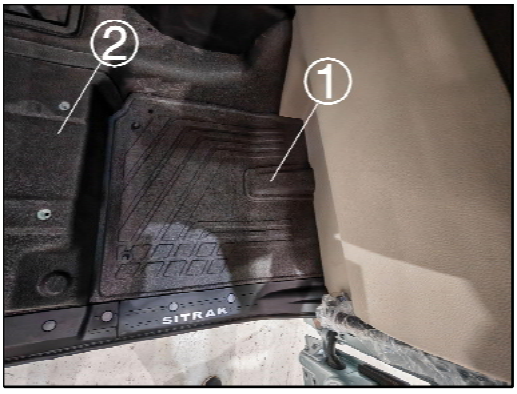

1. Remove the front floor mat ①.
2. Remove the rear floor mat ②.

Remove the inner base plate of the toolbox



1. Remove the floor mat from the toolbox.

Remove the rear floor mat support

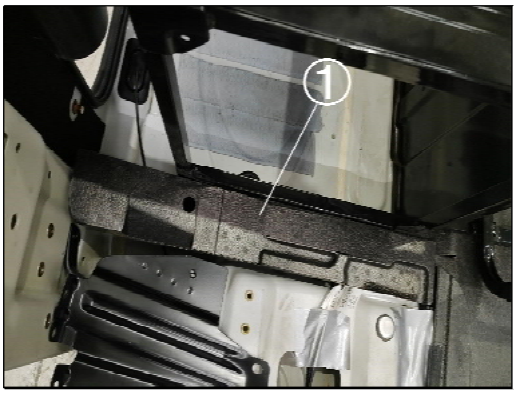

1. Remove the rear floor mat support ①.

Remove the hood liner

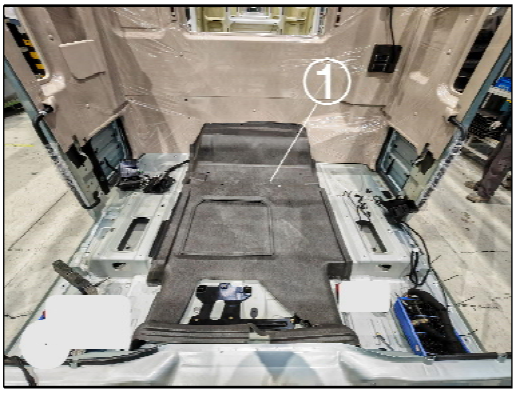

1. Remove the hood liner ①.

Remove the bracket assembly

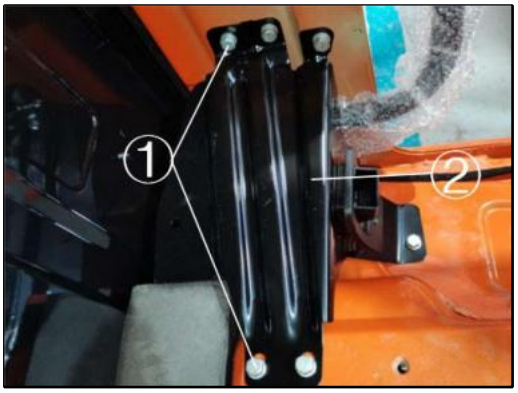

1. Remove the six M8*16 hexagon head bolts ① with a 13mm socket wrench.
2. Remove the bracket assembly ②.

Mounting bracket assembly

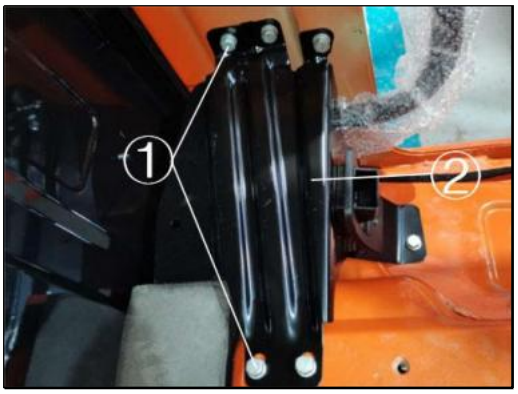

Installation steps

1. Install the bracket assembly ② at the fixed position of the cab body.
2. Use a 13mm socket wrench to tighten the M8*16 hexagon head bolt ① to 20±2Nm.

Install the hood liner

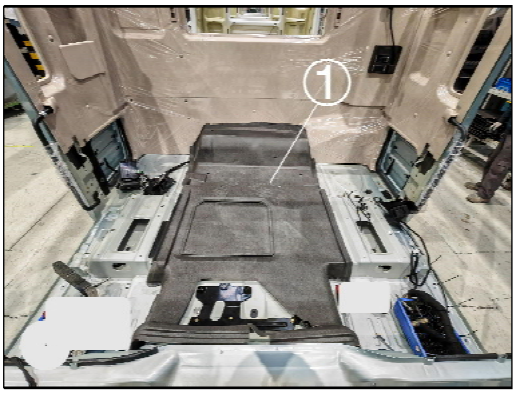

1. Install the hood liner ① in the middle of the cab body. Throw out the rear harness during installation.

Install the rear floor mat support

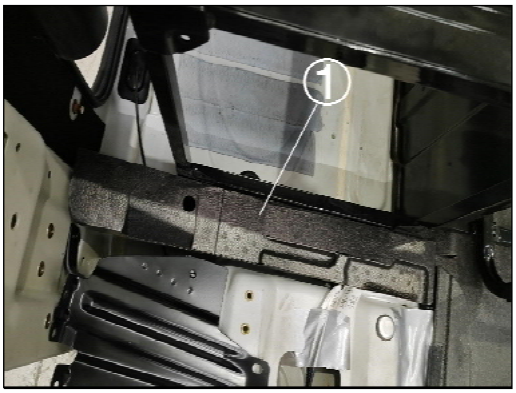

1. Install the rear floor mat support ① in the groove between the toolbox and the cab body.

Install the inner base plate of the toolbox



1. Install the inner base plate of the toolbox into the toolbox ①.

Install the floor mat

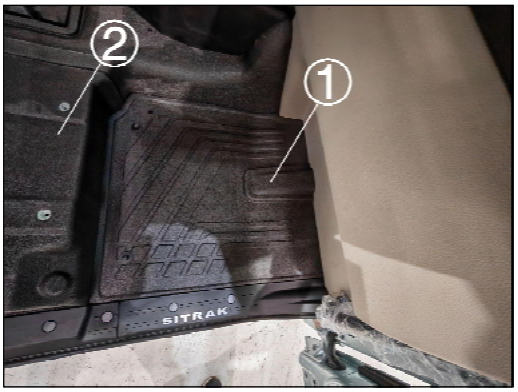

1. Install the front floor mat ① to the front of the cab body floor.
2. Install the rear floor mat ② to the seat mounting position of the cab body.

Install the sill

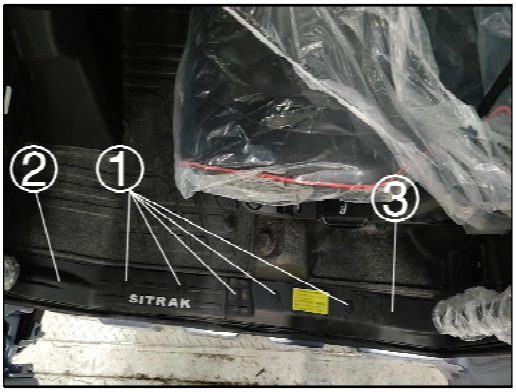

1. Place the front end of the front door sill ② on the inner side of the lower cover, dip the rear end of the rear door sill ③ into the inner side of the B-pillar inner cover, and lap the front end of the rear door threshold with the rear end of the front door threshold.
2. Tighten the M4.8*55 cross recessed pan head tapping screw with a cross head screwdriver, and install the sill cap ① in the screw fixing hole.

Thermal insulation

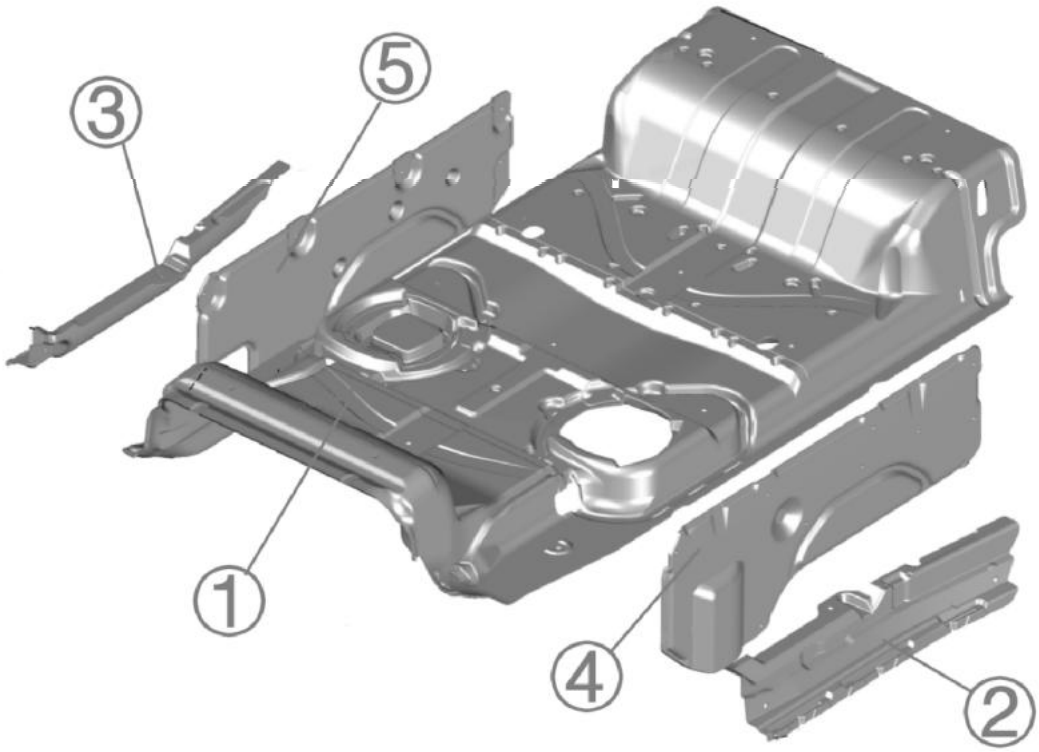

1. Hood heat insulated pad 2. Left heat insulated pad 3. Right heat insulated pad 4. C7 left heat shield 5. C7 right heat shield

Remove the middle heat shield

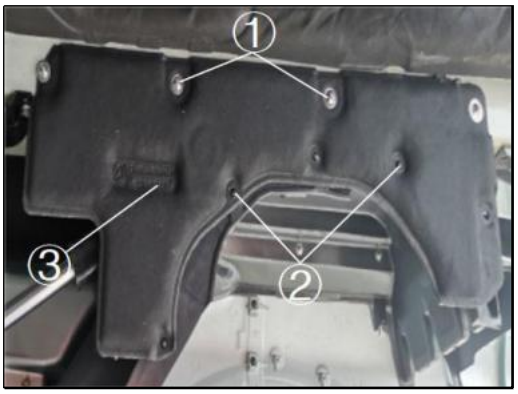

Removal steps

1. Remove the 4 elastic retainer rings ① with a rocker.
2. Remove the five M4.8*25 cross recessed pan head tapping screws ② with a cross head screwdriver.
3. Take out the middle heat shield ③.

Remove the side heat shield

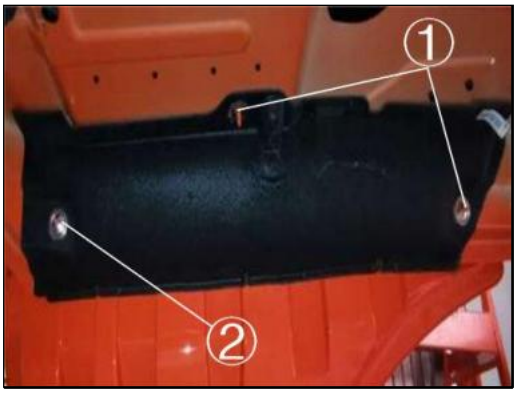

1. Remove the 3 elastic retainer rings ① with a rocker.
2. Take out the side heat shield ②.

Remove the hood heat insulated pad



1. Remove the 18 elastic retainer rings ① with a rocker.
2. Take out the side heat shield ②.

Install the engine heat shield



Installation steps

1. Install the engine heat shield ② at the bottom of the cab body.
2. Fix the engine heat shield ② with the elastic retainer ring ①.

Install the side heat shield

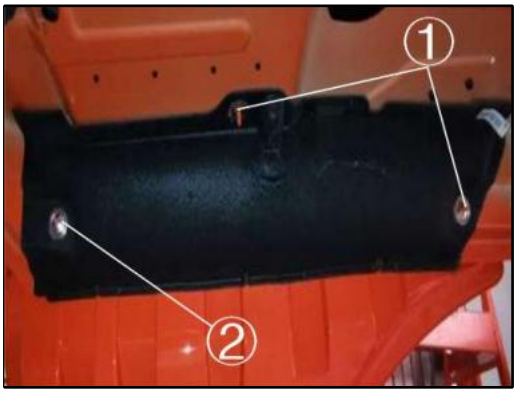

1. Place the side heat shield ① in the mounting stud holes at the bottom of the cab body.
2. Use the elastic retainer ring ② to fix the side heat shield according to the stud hole.

Note: The gasket is a disposable part, and the turbocharger fastening nut is a disposable part.

Install the middle heat shield

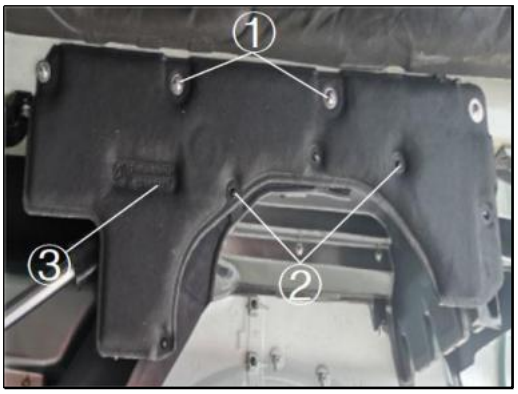

1. Place the middle heat shield ③ on the inside of the side member at the bottom of the cab body.
2. Fix the middle heat shield ③ with the elastic retainer ring ①.
3. Use a cross head screwdriver and five M4.8*25 cross recessed pan head tapping screws ② to fix the middle heat shield ① on the mudguard.

Note: The elastic retainer ring is a disposable part.

Cab mount

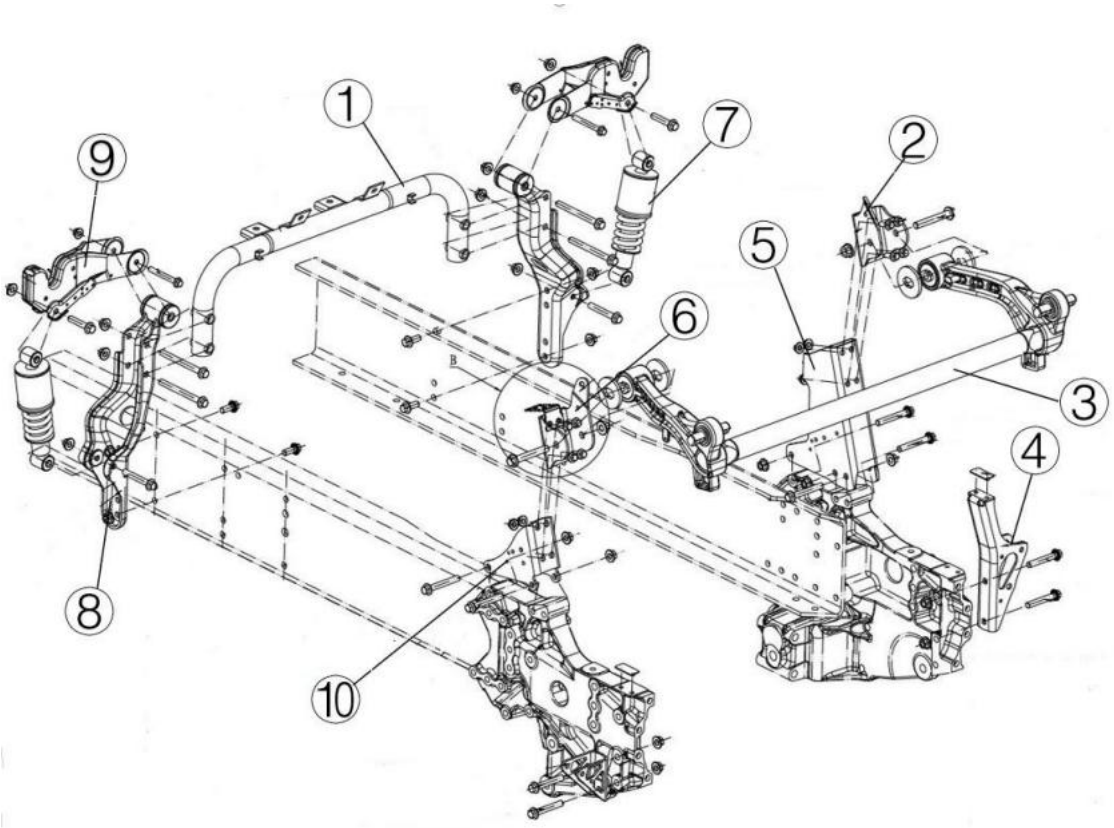

1. Door bracket welding assembly 2. Front suspension swing arm left transition bracket 3. Front suspension swing arm assembly 4. Cab front suspension shock absorber lower bracket 5. Front suspension swing arm bracket 6. Front suspension swing arm right transition bracket 7. Rear suspension spring shock absorber assembly 8. Rear suspension lower bracket assembly 9. Hydraulic lock assembly 10. Front suspension swing arm bracket

Remove the front suspension swing arm assembly

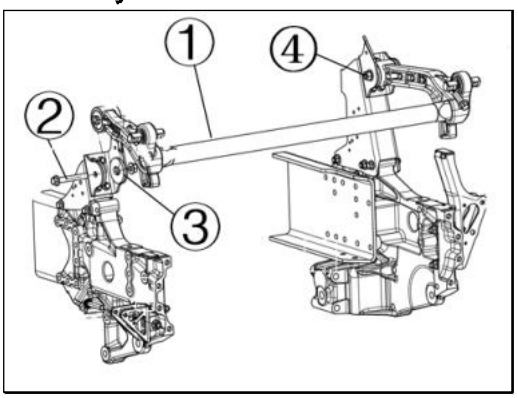

Removal steps

1. Remove the M16*110 hexagon flange bolt ② and M16 hexagon nut ④ with a 21mm socket, and take out the front suspension swing arm assembly ① and limit washer ③.

Remove the front suspension swing arm transition bracket

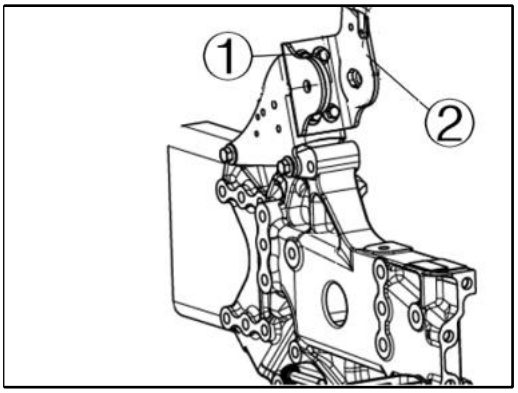

1. Remove the four M12*30 hexagon flange serrated bolts ① with a 17mm socket wrench, and take out the swing arm transition bracket ②.

Remove the front suspension swing arm bracket

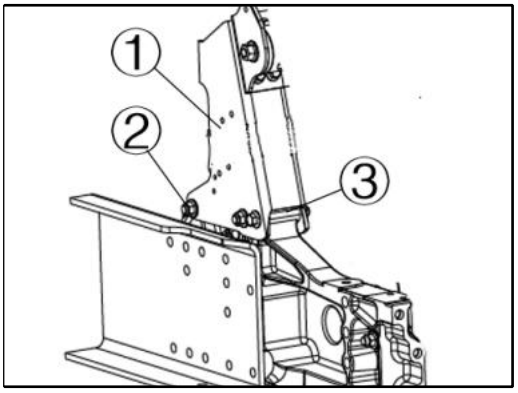

1. Use a 19mm socket wrench to remove three M14*100 hexagon flange serrated bolts ③ and M14 hexagon flange serrated nuts ②, and take out the front suspension swing arm bracket ①.

Remove the front suspension shock absorber lower bracket

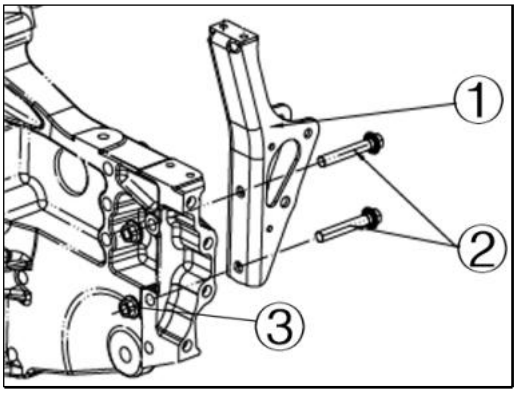

1. Remove the M14*90 hexagon flange serrated bolt ② and M14 hexagon flange serrated nut ③ with a 19mm socket, and take out the front suspension shock absorber lower bracket ①.

Remove the front suspension shock absorber upper bracket

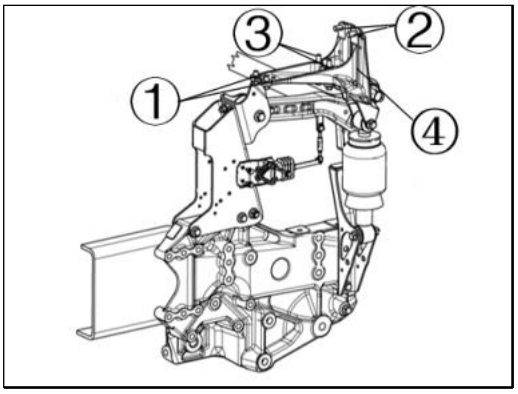

1. Remove the M14*30 hexagon flange serrated bolt ② with a 19mm socket, remove the M12*70 hexagon flange bolt ③ and M12*25 hexagon flange bolt ① with a 17mm socket, and take out the front suspension shock absorber upper bracket ④.

Remove the front suspension shock absorber

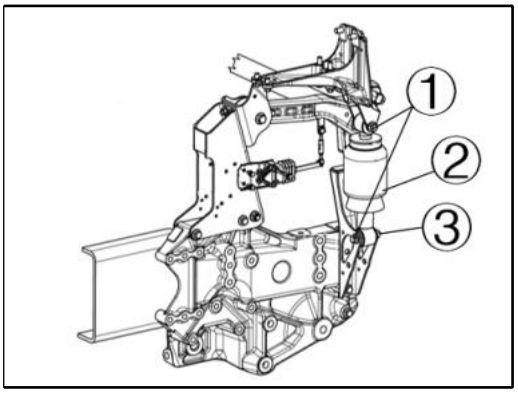

1. Remove the M14*80 hexagon flange serrated bolt ① and M14 hexagon flange serrated nut ③ with a 19mm socket, and take out the front suspension shock absorber ②.

Remove the rear suspension shock absorber

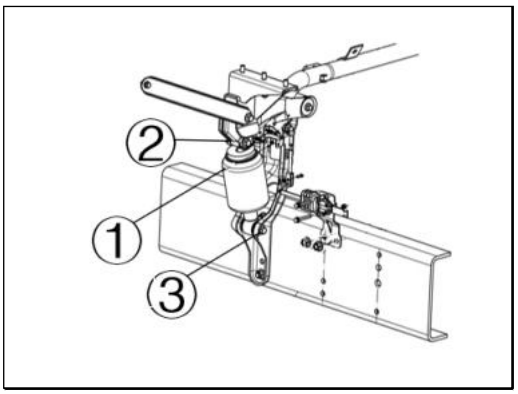

1. Remove the M14*90 hexagon flange serrated bolt ③ and M14*70 hexagon flange serrated bolt ② with a 19mm socket, and take out the rear suspension shock absorber ①.

Remove the hydraulic lock assembly

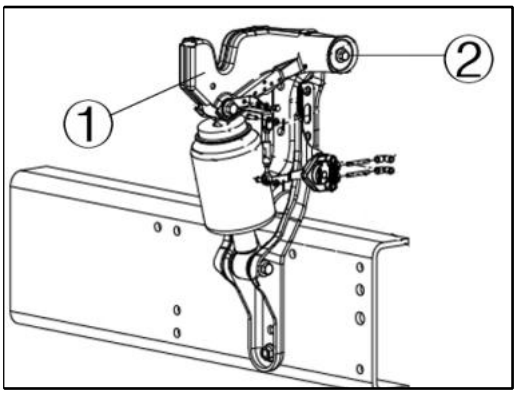

1. Remove the M12*100 hexagon flange serrated bolt ② with a 17mm socket wrench, and take out the hydraulic lock assembly ①.

Remove the door bracket assembly

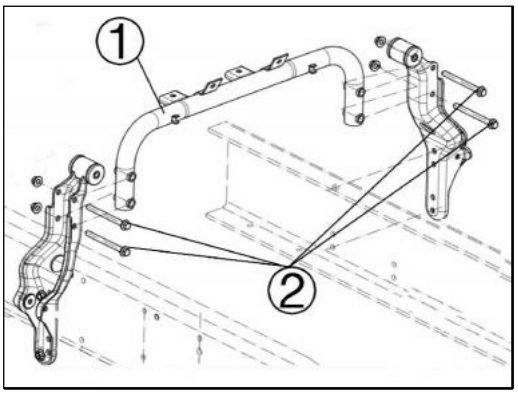

1. Remove the M14*100 hexagon flange serrated bolt ② with a 19mm socket wrench, and take out the door bracket assembly ①.

Remove the rear suspension shock absorber lower bracket

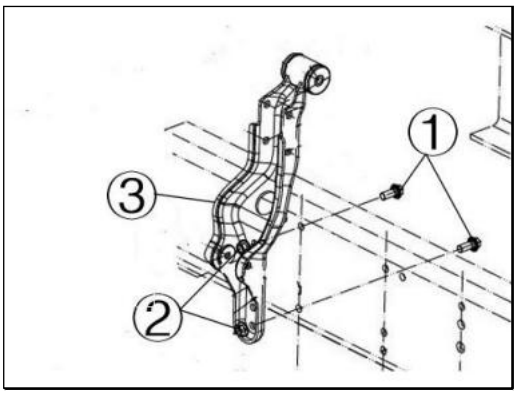

1. Remove the M14*35 hexagon flange serrated bolt ① and M14 hexagon flange bolt with tooth ② with a 19mm socket, and take out the rear shock absorber lower bracket ③.

Removal of slotted supports

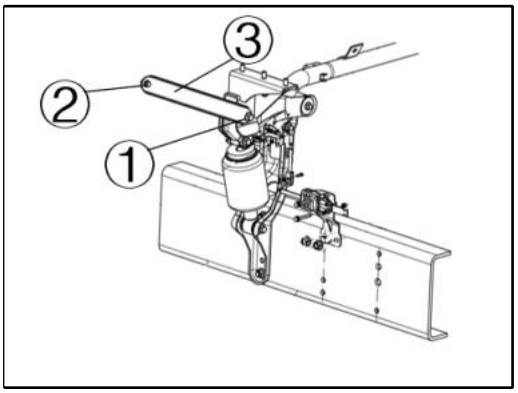

1. Remove the M10*25 hexagon flange bolt ② with a 13mm socket wrench, remove the M14*80 hexagon flange serrated bolt ① with a 19mm socket wrench, and take out the slotted bracket ③.

Remove the rear suspension shock absorber upper bracket

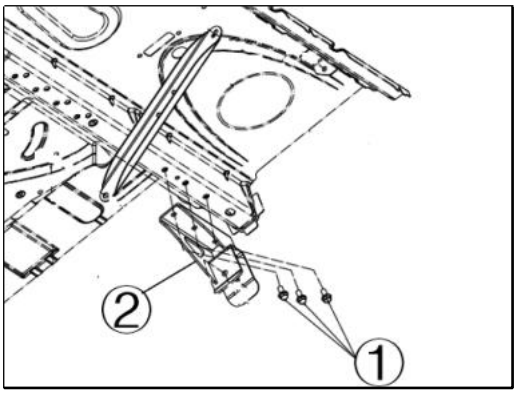

1. Remove the M12*25 hexagon flange bolt ① with a 17mm socket, and take out the rear suspension shock absorber upper bracket ②.

Remove the adjusting mechanism of the height adjusting valve

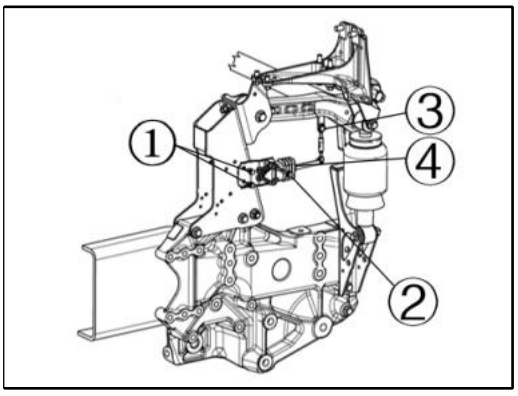

1. Remove the M8*25 hex flange bolt ① and M8*55 hex flange bolt ② with a 10mm socket, take out the cotter pin ③ with needle nose pliers, and take out the height adjusting valve ④.

Installation of height adjusting valve mechanism

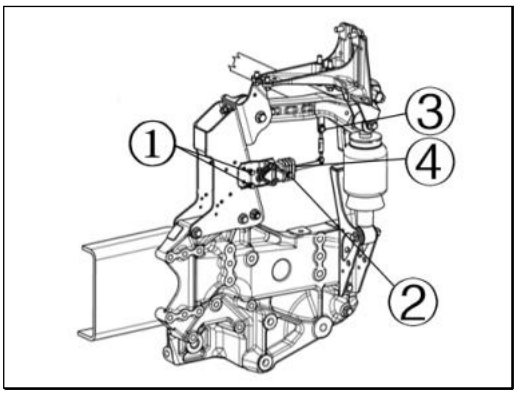

Installation steps

1. Install the height adjusting valve ④ to the bracket with a 10mm socket M8*55 hexagon flange bolt ②.

2. Install the height adjusting valve fixing bracket on the swing arm bracket with a 10mm socket M8*25 hexagon flange bolt ①.

3. Connect the height adjusting valve stabilizer bar to the upper bracket with the cotter pin ③.

Install the rear suspension shock absorber upper bracket

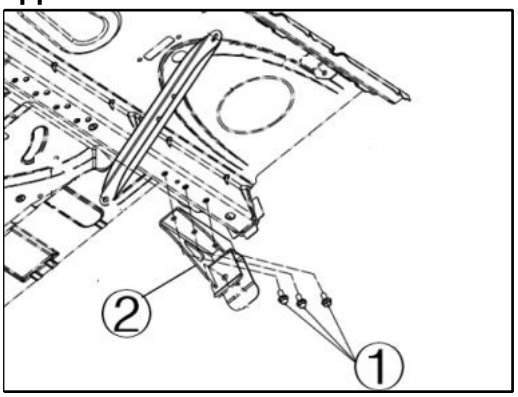

1. Install the rear suspension shock absorber upper bracket ② into the rear mounting hole of the side member at the bottom of the cab body, and use a 17mm socket wrench to tighten the M12*25 hexagon flange bolt ① to 75±7.5Nm.

Installation of slotted bracket

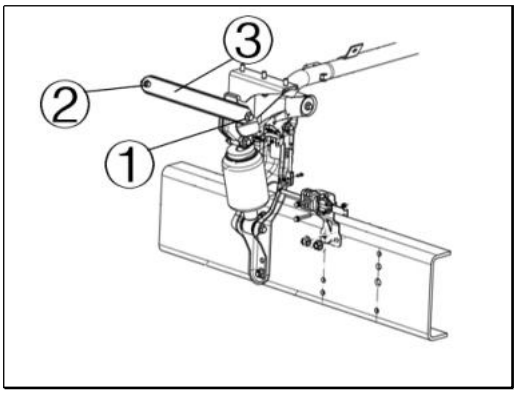

1. Install the slotted bracket ③ between the rear suspension shock absorber upper bracket and the cab body. Use a 13mm socket to tighten the M10*25 hexagon flange bolt ② at the cab body end to 45±4.5Nm, and use a 19mm socket to tighten the shock absorber bracket end with M14*80 hexagon flange serrated bolt ① to 125 ±12.5Nm.

Note: When installing the shock absorber bracket section, fix the noise reduction block in the shock absorber bracket slot, and thread the fixing bolt from front to back.

Install the rear suspension shock absorber lower bracket

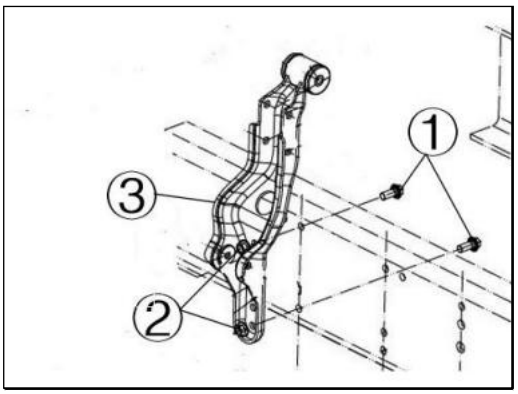

1. Install the rear suspension shock absorber lower bracket ③ outside the frame, and use a 19mm socket wrench to tighten the M14*35 hexagon flange serrated bolt ① and M14 hexagon flange serrated nut ② to 200±20Nm.

Installation of door bracket assembly

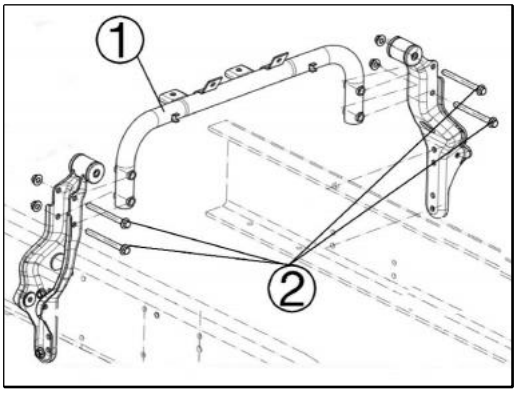

1. Install the door bracket assembly ① on the rear suspension shock absorber lower bracket, and tighten the M14*100 hexagon flange bolt ② to 200±20Nm with a 19mm socket.

Install the hydraulic lock assembly

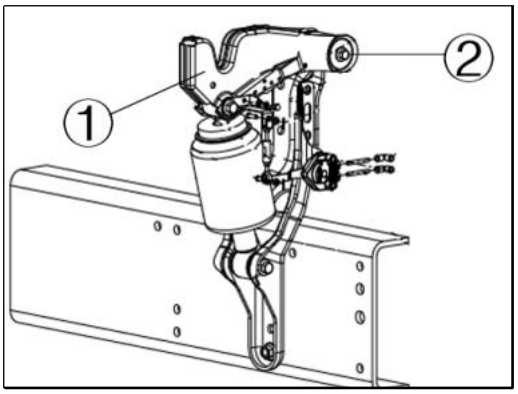

1. Install the hydraulic lock bracket assembly ① on the top of the rear suspension shock absorber, and use a 17mm socket wrench to tighten the M12*100 hexagon flange serrated bolt ② to 110±10Nm.

Install the rear suspension shock absorber

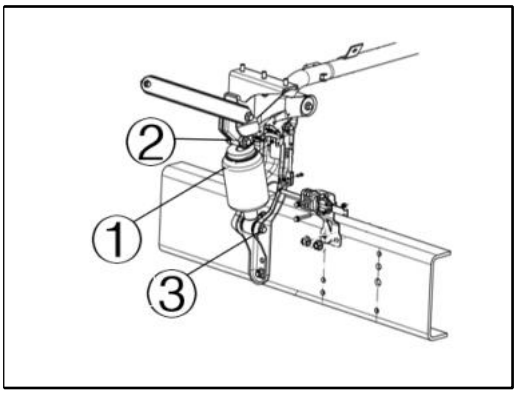

1. Install the rear suspension shock absorber ① between the hydraulic lock assembly and the shock absorber bracket. Use a 19mm socket wrench to tighten the M14*90 hexagon flange serrated bolt ③ at the lower end and the M14*70 hexagon flange serrated flange ② at the upper end to 200±20Nm.

Install the front suspension shock absorber

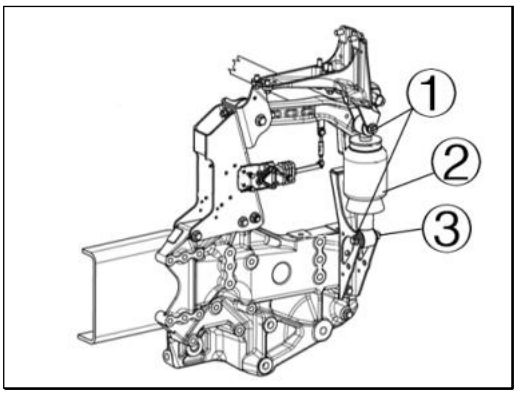

1. Install the front suspension shock absorber ② on the front suspension shock absorber bracket, and use a 19mm socket wrench to tighten the M14*80 hexagon flange serrated bolt ① and M14 hexagon flange serrated nut ③ to 200±20Nm.

Install the front suspension shock absorber upper bracket

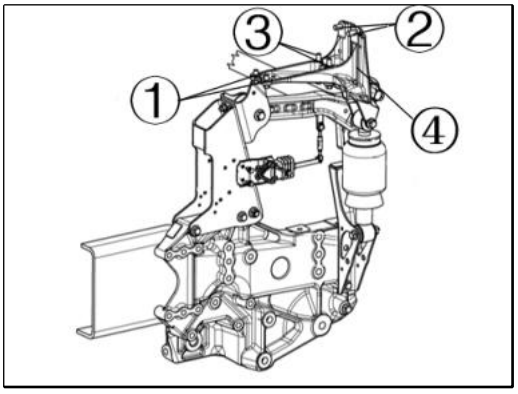

1. Install the front suspension shock absorber upper bracket at the front end of the side member at the bottom of the cab body, tighten the M14*30 hexagon flange serrated bolt ② at the front with a 19mm socket to 120±12Nm, and tighten the M12*70 hexagon flange bolt ③ and M12*25 hexagon flange bolt ① at the bottom to 95±10Nm with a 17mm socket.

Install the front suspension shock absorber lower bracket

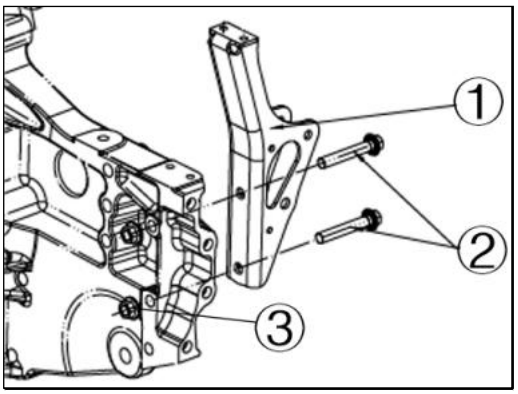

1. Install the front suspension shock absorber lower bracket ① on the outside of the front end of the frame, and use a 19mm socket wrench to tighten the M14*90 hexagon flange serrated bolt ② and M14 hexagon flange serrated nut ③ to 200±20Nm.

Note: The bolts are threaded from the outside to the inside, and the nuts are on the inside of the frame.

Install swing arm bracket

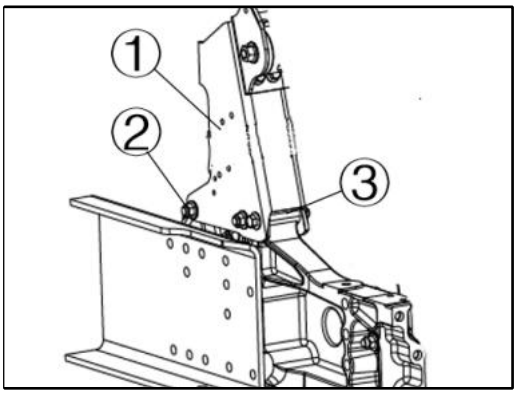

1. Install the swing arm bracket ① on the front section of the frame, and use a 19mm socket wrench to tighten the M14*100 hexagon flange serrated bolt ③ and M14 hexagon flange serrated nut ② to 200±20Nm.

Install swing arm transition bracket

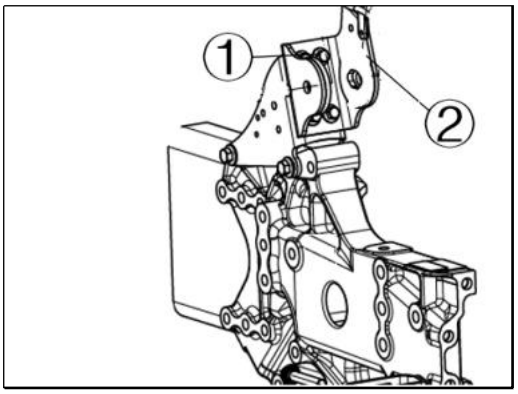

1. Install the swing arm transition bracket ② on the upper end of the swing arm bracket, and use a 17mm socket wrench to tighten the four M12*30 hexagon flange serrated bolts ① to 95 ±10Nm.

Install the front suspension swing arm assembly

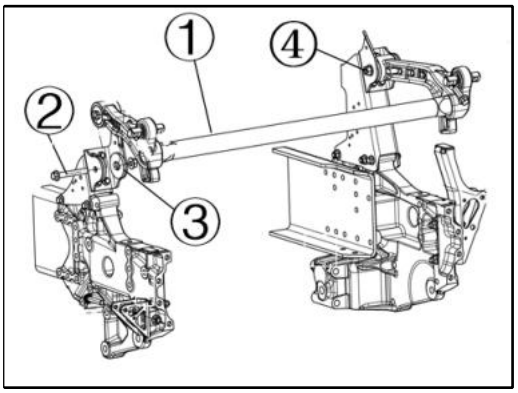

1. Install the front suspension swing arm assembly ① on the swing arm fixing bracket, install the limit block ③ between the swing arm fixing point and the swing arm transition bracket, and use a 21mm socket wrench to tighten the M16*110 hexagon flange bolt ② and M16 hexagon nut ④ to 300±30Nm.

Lifting device

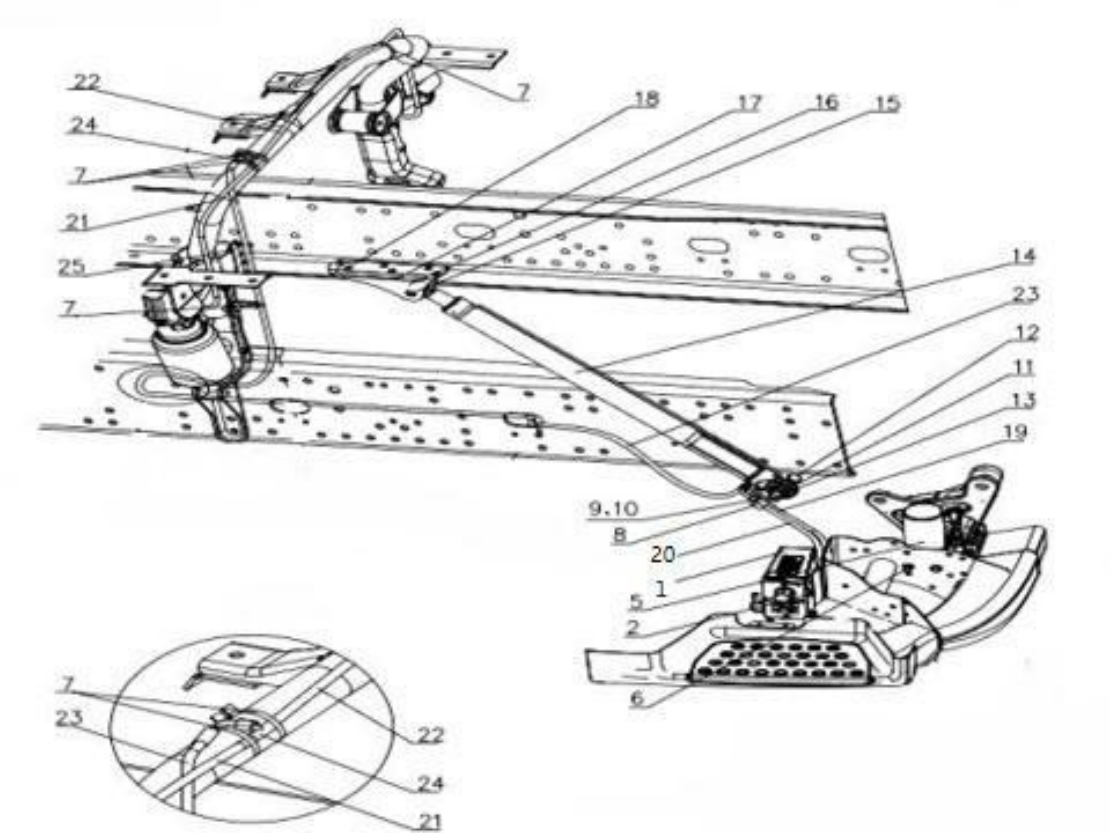

1. Electric oil pump 2. Hexagon flange bolt M10 3. Double-bend hose 4. Double-bend vertical low-pressure hose 5. Motor assembly 6. Hexagon flange bolts M8 7. Plastic fastening belt 8. Hose clamp 9. Hexagon head bolt 10. Hexagon flange lock nut 11. Shim I 12. Shim II 13. Self-locking nut 14. Quick-plug cylinder 15. Hexagon flange screw 16. Lifting cylinder upper left bracket assembly 17. Upper bracket 18. Hexagon flange nut M12 19 Double-bend quick-plug hose A 20. Double-bend fast-plug hose B 21. Single-side 180-degree bend high-pressure hose (530) 22. Single-side 180-degree bend high-pressure hose (900) 23. Double-bent quick-plug hose (3100) 24. Ferrule-type tee joint 25. Bracket

Remove the hydraulic oil pipe



Removal steps

1. Use a 17-19mm open-end wrench to remove the hydraulic pipe joint of the lifting device system.

Note: When disassembling the line, ensure that there is no pressure in the line.

Remove the motor assembly

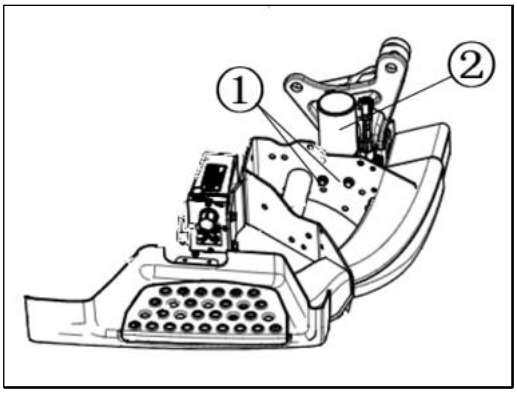

1. Remove the M8*20 hexagon flange bolt ① with a 10mm socket, take out the motor assembly connector, and take out the motor assembly ②.

Remove the electric oil pump

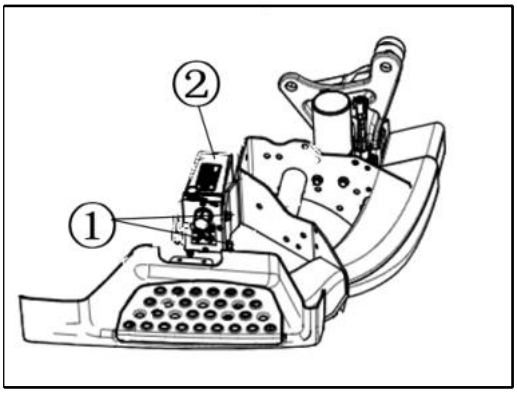

1. Remove the M10*16 hexagon flange bolt ① with a 13mm socket, and take out the electric oil pump ②.

Remove the lifting cylinder

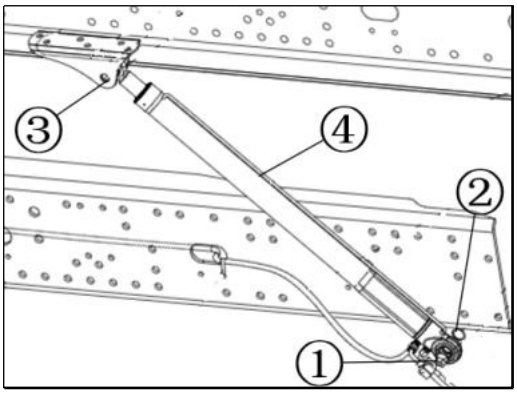

1. Remove the M18 self-locking nut ① with a 27mm socket wrench, and remove the gasket ②.
2. Remove the M16*85 hexagon head flange bolt ③ with a 21mm socket, and take out the lifting cylinder.

Remove the upper bracket of the lifting cylinder

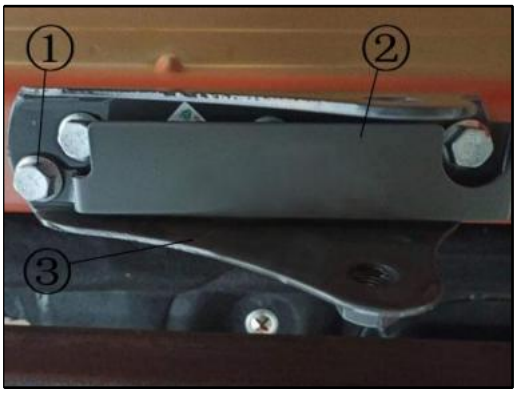

1. Remove the two M12*25 hexagon flange bolts ① with a 17mm socket wrench, and take out the upper bracket ②.
2. Remove the four M12*25 hexagon flange bolts ① with a 17mm socket wrench, and take out the lift cylinder upper left bracket assembly ③.

Remove the tilting and moving switch assembly

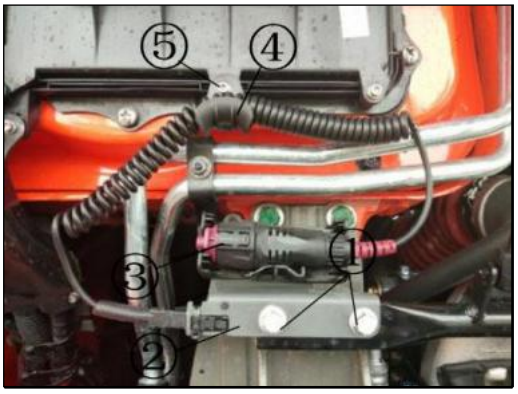

1. Remove the M5*16 hexagon socket round head screw ⑤ with a T25 socket, take out the harness hook ④, take out the tilt switch harness connector, and take out the tilt switch ③.

2. Remove the M10*80 hexagon flange serrated bolt ① with a 13mm socket, and take out the switch bracket assembly ②.

Install the tilting and moving switch assembly

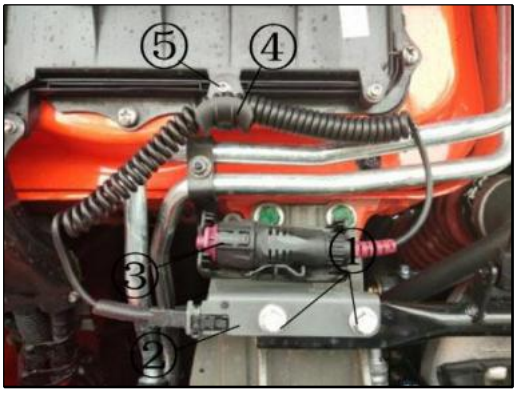

Installation steps

1. Install the switch bracket ② on the right side of the front cross member, and use a 13mm socket wrench to tighten the M10*80 hexagon flange serrated bolt ① to 65±6.5Nm.

2. Install the harness hook ④ on the outside of the protective box cover, and tighten the M5*16 hexagon socket round head screw ⑤ with a T25 socket.

3. Connect the tilt switch harness connector, install the tilt switch handle ③ on the switch bracket ②, and install the switch harness on the harness hook.

Install the lifting cylinder upper bracket

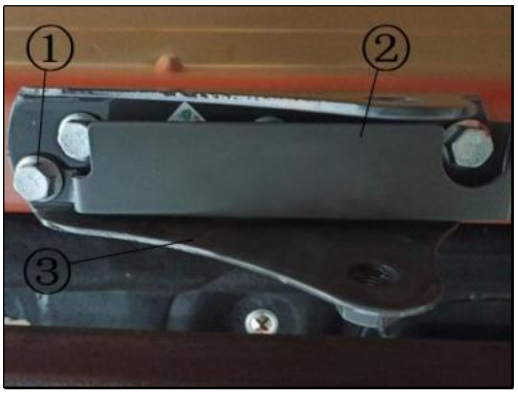

1. Install the upper left bracket ③ of the lifting cylinder on the side member at the bottom of the cab, and use a 17mm socket wrench to tighten the four M12*25 hexagon flange bolts ① to 75 ±7.5Nm.

2. Install the upper bracket ② into the groove of the upper left bracket ③ of the lifting cylinder, and use a 17mm socket wrench to tighten the two M12*25 hexagon flange bolts ① to 75 ±7.5Nm.

Note: When installing the upper left bracket of the lifting cylinder, the spare female end shall be on the inner side of the cab side member.

Install the lifting cylinder

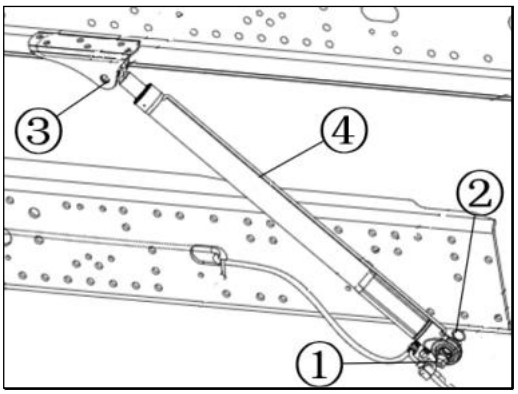

1. Install the upper end of the lifting cylinder ④ and the steel sleeve of the lifting cylinder into the upper bracket of the lifting cylinder, and tighten the M16*85 hexagon flange bolt ③ to 190±19Nm with a 21mm socket.

2. Install the lifting cylinder ④ and gasket ② on the lower bracket, and tighten the M18 self-locking nut ① to 270±27Nm with a 27mm socket wrench.

Note: When fixing the upper end, install the bolts from the outside of the cab to the inside, apply 2271 thread fastening adhesive, and install the lifting cylinder connecting steel sleeve to the side of the cab.

Install the electric oil pump

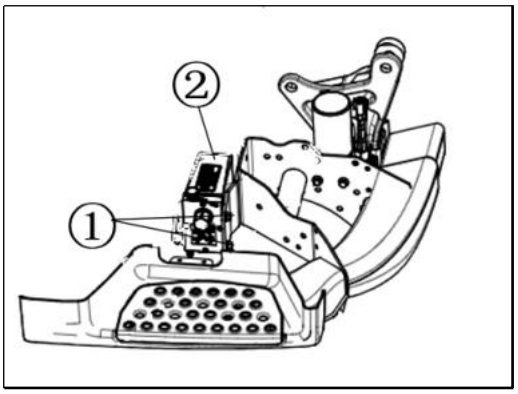

1. Install the electric oil pump ② on the oil pump bracket, and tighten it with a 13mm socket M10*16 hexagon flange bolt ① to 65±6Nm.

Install the motor assembly

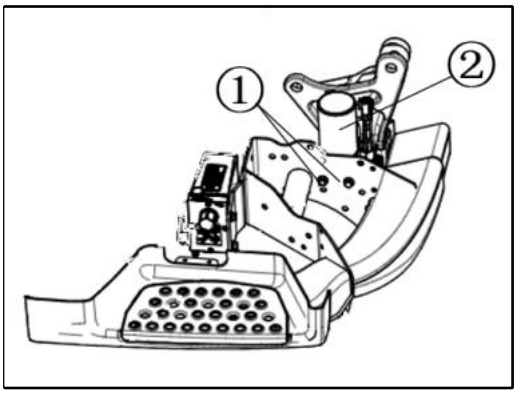

1. Install the motor assembly on the pedal bracket, and tighten the M8*20 hexagon flange bolt ① with a 10mm socket to 35±3Nm.

Note: When installing the motor assembly and electric oil pump, pay attention to applying 2271 threadlocker to the bolts.

Install the hydraulic oil pipe



1. Install the lifting hydraulic oil pipe on the corresponding pipe joint and tighten it with a 17-19mm open-end wrench. Tightening torque: pipe joint torque: M12*1.5(22-26)Nm, M14*1.5 (25-30)Nm.

Note: Apply 1570 oil line sealant to the pipe joint.

Combination pedal

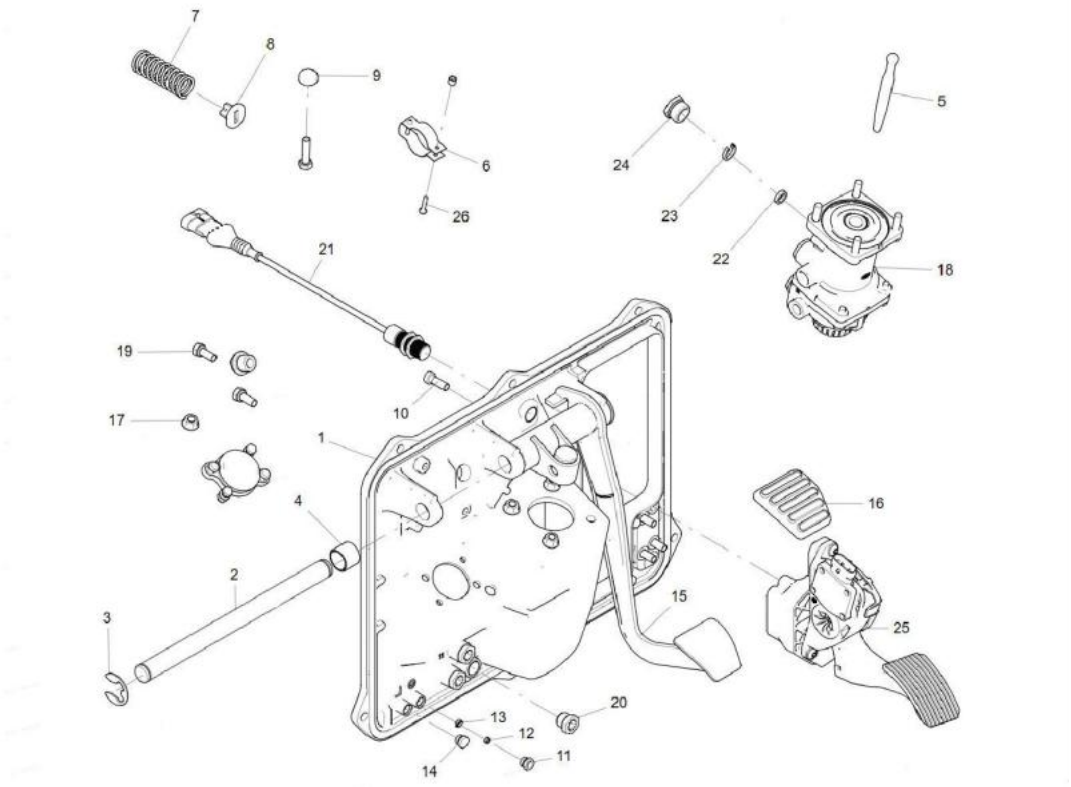

1. Combination pedal with gasket 2. Mandrel 3. Split retainer ring 4. Needle bearing without inner ring 5. Tappet 6. Elastic hoop 7. Compression spring 8. Spring seat 9. Plug 10. Hexagon socket flat head slotted screw 11. Nut seat NG6 12. Elastic element NG6 13. Circlip NG6 14. Plug 15. Brake pedal assembly 16. Pedal rubber cover 17. Hexagon flange nut 18. Brake master valve 19. Clutch control part 20. Nut seat NG8 21. Hall brake lamp switch 22. Elastic element N12 23. Circlip NG12 24. Nut seat NG12 25. Accelerator pedal 26. Hexalobular socket pan head tapping screw

Remove the protective box cover



Removal steps

1. Remove the eight M5*10 fastening bolts ② on the protective box cover with a T25 screwdriver bit.
2. Remove the protective box cover ① from the combination pedal.

Remove the harness connector

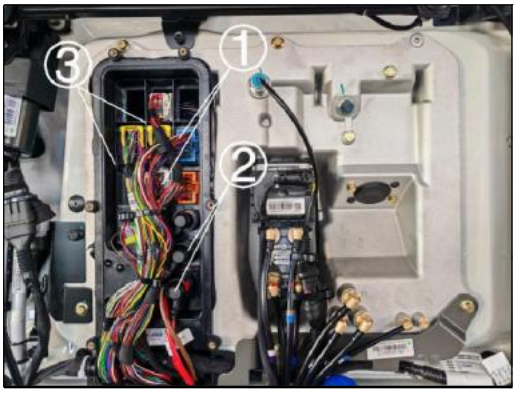

1. Remove the front wall harness connector ①, remove the M8 self-locking nut with a 13mm socket, and take out the front wall cable ②.
2. Remove the harness connector ③ along the locking port with a rocker.

Note: When removing the front wall harness power line, the battery power switch must be kept disconnected.

Remove the front wall line

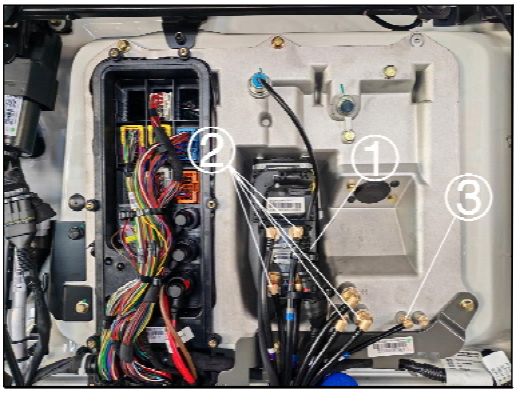

1. Cut the cable tie with a branch shear and remove the brake lamp switch harness ①.
2. Remove the front wall brake valve line and parking brake valve air supply line ② with a 19mm open-end wrench.
3. Remove the seat steering wheel adjustment line ③ with a 12mm open-end wrench.

Note: When removing the air pressure line, the line pressure must be exhausted.

Remove the combination pedal

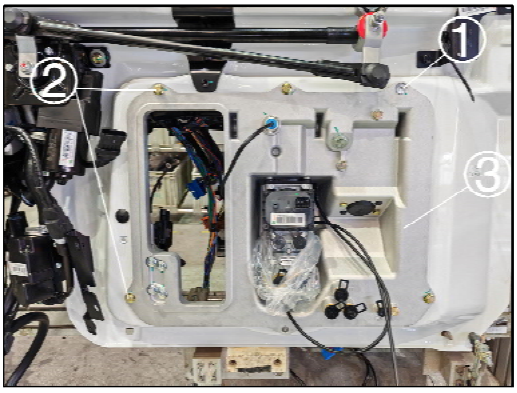

1. Remove the M8*25 hexagon socket countersunk head bolt ① with a T30 socket.
2. Remove the five M8*30 hexagon flange bolts ② with a 10mm socket wrench.
3. Remove the combination pedal ③.

Installation of combination pedal

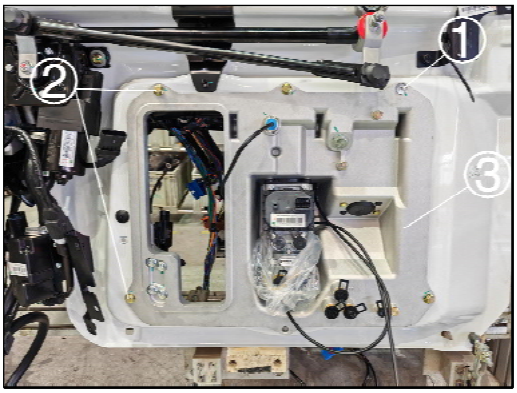

Installation steps

1. Install the combination pedal ③ at the mounting position of the front wall module.
2. Use a 10mm socket wrench to tighten the M8*30 hexagon flange bolt ② to 22±3Nm.
3. Use a T30 socket to tighten the M8*25 hexagon socket countersunk head bolt ① to 15 ±1.5Nm.

Install the harness connector

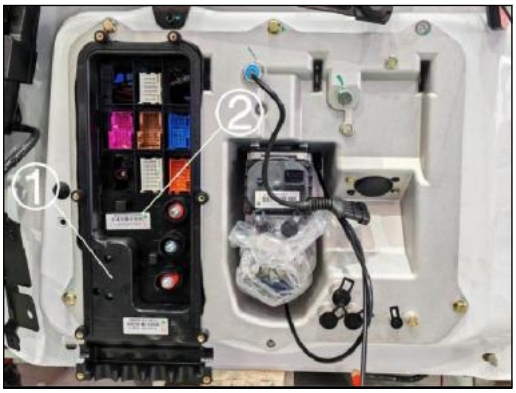

1. Clamp the connector mounting bracket ① to the junction box mounting bracket ② until the claws are fully engaged.

Install the front wall line

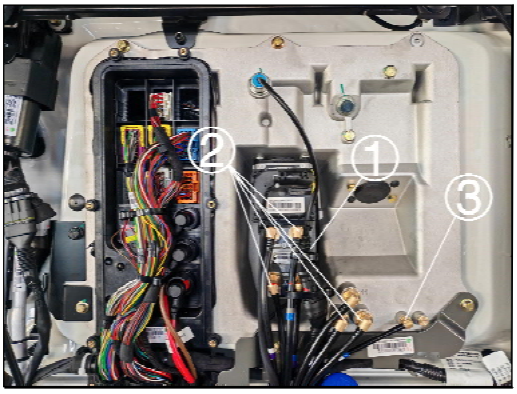

1. Use a 19mm open-end wrench to install and tighten the corresponding line interfaces of the brake valve line and the parking brake valve line ② to 10-17Nm.

2. Use a 12mm open-end wrench to install and tighten the corresponding line interface of the seat steering wheel line to 5±0.5Nm.

3. Connect brake lamp switch harness ①

Note: When installing the line, check whether the inner seal ring of the brake valve is intact. After installing the brake valve line, pull it back to check whether the line is installed in place.

Install the front wall harness

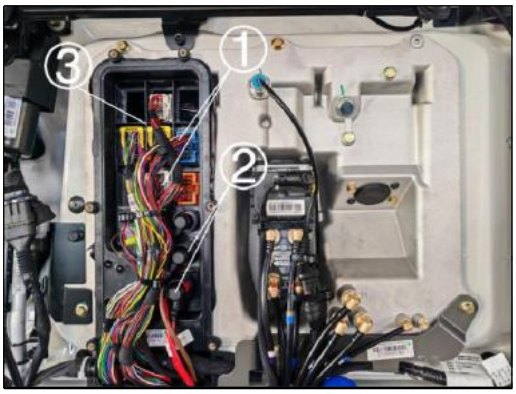

1. Insert the front wall harness connector ① to the corresponding base of the harness connector ③.

2. Install the front wall cable on the corresponding stud of the harness connector, and tighten the M8 self-locking nut to 22±2Nm with a 13mm socket wrench.

Note: When installing the vehicle power harness, pay attention to distinguishing the positive and negative poles, and the negative pole is in the middle of the three studs and the positive pole is on both sides.

Install the protective box cover



1. Install the left side of the junction box cover ① on the base of the junction box mounting bracket.

2. Use a T25 screwdriver bit to tighten the M5*10 hexagon socket head cap screw ② to 5±0.5Nm.

Steering control

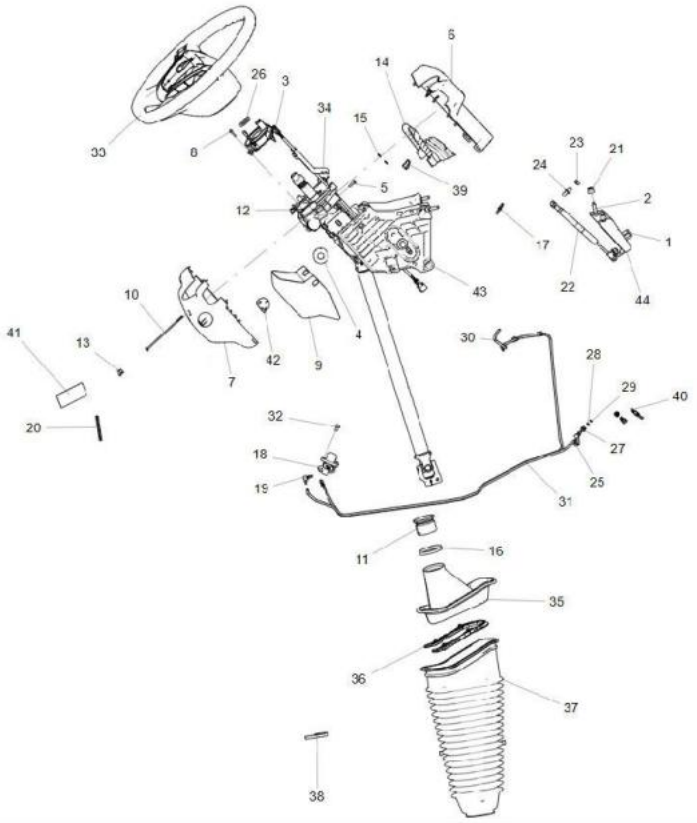

1. Steering control connecting bolt I 2. Steering control connecting bolts II 3 Clock spring assembly 4. Ignition lock cover 5. Screw M5*20 6. Steering column trim cover (front) 7. Steering column trim covers (rear) 8. Hexalobular socket pan head tapping screw 9. Steering column trim Cover (lower bottom) 10. Screw 11. Guide ring 12. Blanking cover (left) 13. Plugging cover (right) 14. Steering column front shield 15. Fixing snap ring 16. Plastic fastening belt 17. Straight joint body NG6 18. Two-position tee direction control 19. Right-angle joint body 20. Protective strip 21. Shouldered hexagon nut 22. Gas spring support bolt 23. Type-2 all-metal hexagon lock nut 24. Spherical journal 25. Assembled clamp plate reinforcement 26. Washer 27. Nut seat NG6 28. Snap spring NG6 29. Elastic element NG6 30. Polyamide tube 31. Polyamide tube PHLY 32. Hexalobular socket pan head screw 33. Steering wheel assembly 34. Wire harness fixing bracket 35. Dust seal cover 36. Fixed pressure ring 37. Dust proof corrugated pipe 38. Plastic fastening tape 39. Cap 40. T-shaped tee joint body 41. Seat adjustment mark 42. Cover 43. Steering column assembly 44. Steering column mounting bracket

Remove the steering wheel





Removal steps

1. Remove the steering wheel trim cover ①.

2. Remove the steering wheel harness ③, remove the attached M22 hexagon nut ④ with a 32mm socket, and take out the steering wheel ②.

Removal of telescopic shaft

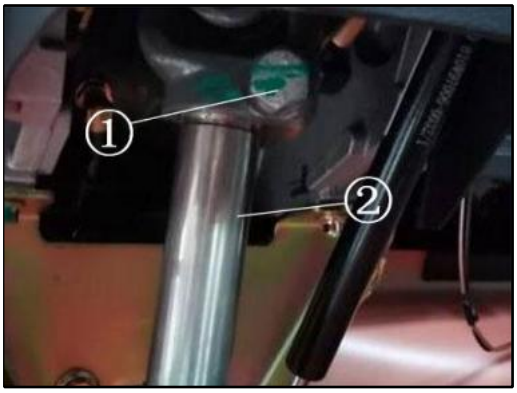

1. Remove the M10*55 hexagon head bolt ① with a 16mm socket wrench, and take out the telescopic shaft assembly ②.

Remove the steering column mounting bracket

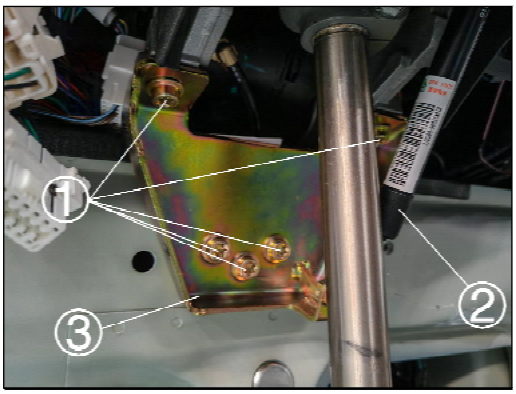

1. Remove the gas spring ② with a rocker.
2. Remove the M8*25 shoulder bolt ① with a T45 socket, and take out the steering column mounting bracket ③.

Remove the steering column sub-assembly

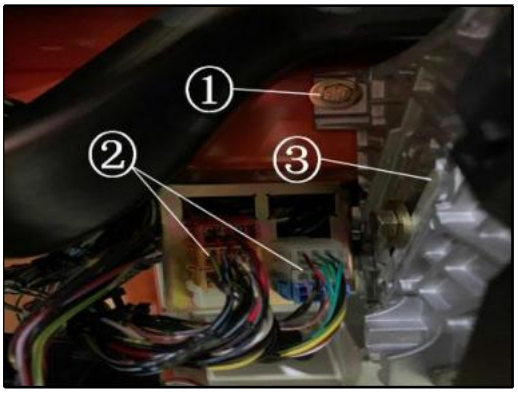

1. Remove the steering column butt harness ②.
2. Remove the two M8*30 hexagon head assembling bolts ① with a 13mm socket wrench, and take out the steering column sub-assembly.

Remove the steering column trim cover

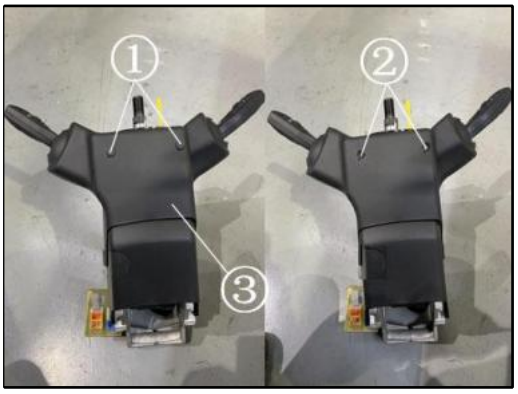

1. Remove the cap ① with a rocker.
2. Remove the M5*120 screw ② with a T25 socket, and take out the steering column trim cover.

Remove the combination switch

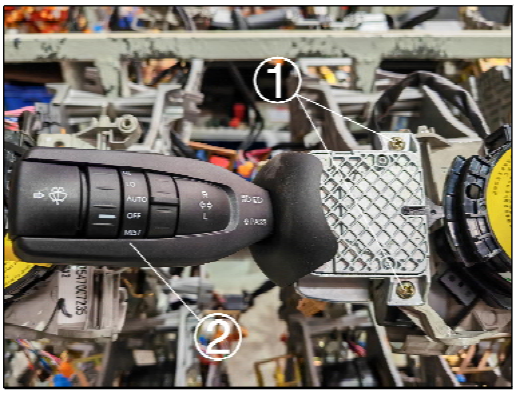

1. Remove the M5*16 cross recessed pan head screw ① with a cross head screwdriver, and take out the combination switch ②.

Remove the clock spring

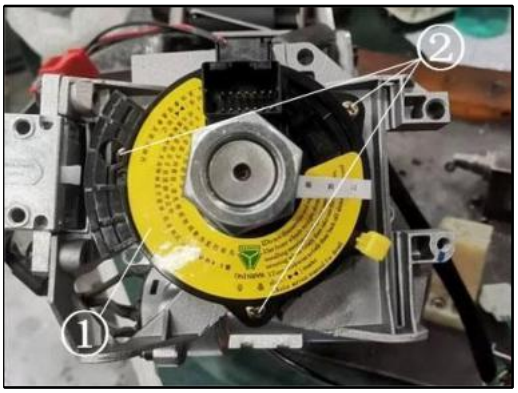

1. Remove the M4*20 cross recessed pan head screw ② with a cross head screwdriver, and take out the clock spring ①.

Remove the steering angle sensor

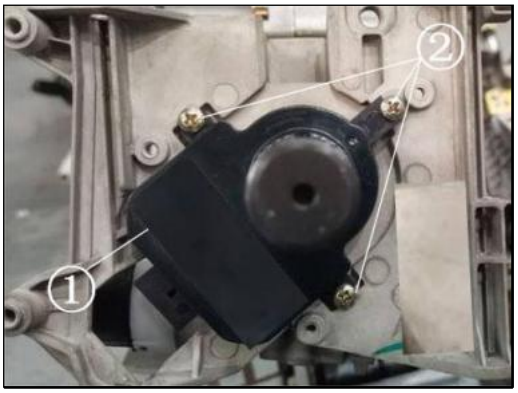

1. Remove the M4*16 cross recessed pan head screw ② with a cross head screwdriver, and take out the angle sensor ①.

Install the steering angle sensor

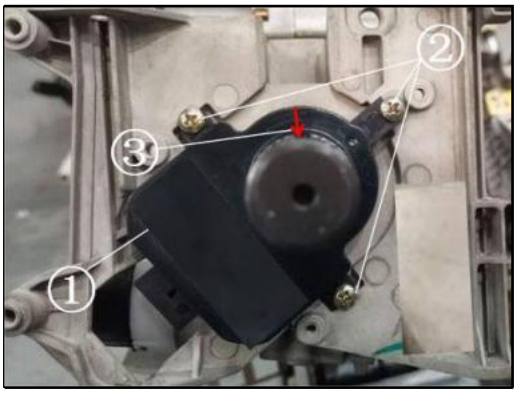

Installation steps

1. Install the steering angle sensor ① on the steering column according to the fixing point ③, and use a cross head screwdriver to tighten the M4*16 cross recessed screws to 1.5±0.2Nm.

Install the clock spring

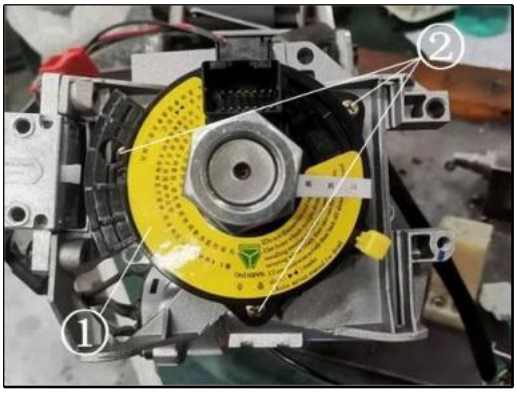

1. Clamp the convex point of the clock spring ① into the groove of the steering column, and use a cross head screwdriver to tighten the M4*20 cross recessed pan head screw ② to 1.5±0.2Nm.

Note: Before the steering column is locked, it is forbidden to remove the stop pin and rotate the clock spring.

Installation of combination switch

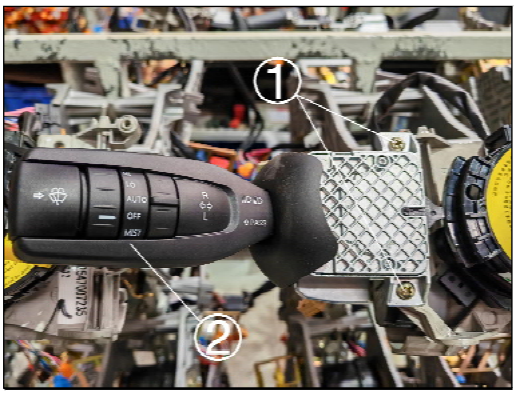

1. Install the combination switch ② on the steering column, and use a cross head screwdriver to tighten the M6*16 cross recessed pan head screw ① to 6±0.6Nm.

Install the steering column harness

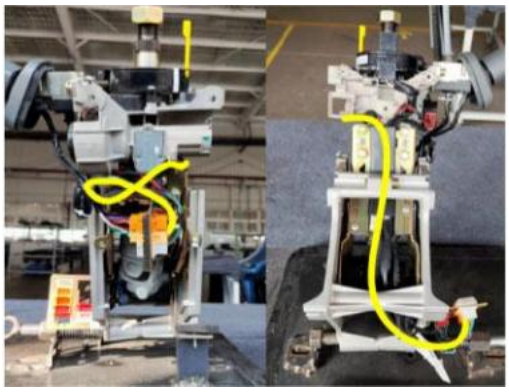

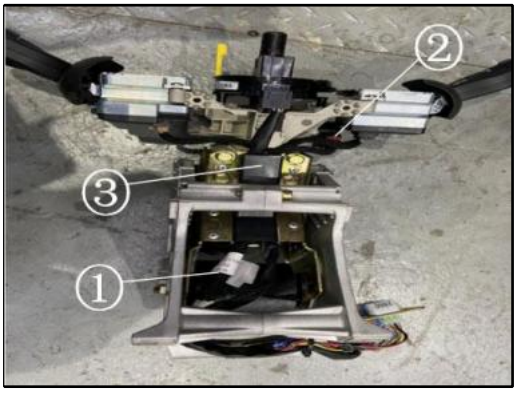

1. Arrange the steering column harness ① on the steering column according to the direction shown in the figure, and plug the steering column harness S101 plug ② into the ignition lock socket hole and clamp it in place; Wrap the harness into the protective strip ③ and clamp it in place.

Install the steering column shield

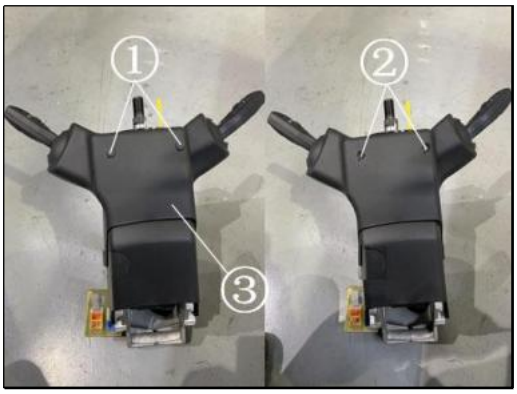

1. Install the assembled front trim cover ③ onto the steering column body, align the bolt holes of the trim cover with those of the steering column body, and tighten the M5*120 screw ② with a T25 socket.
2. Install the cap ① into the bolt hole.

Install the steering column sub-assembly

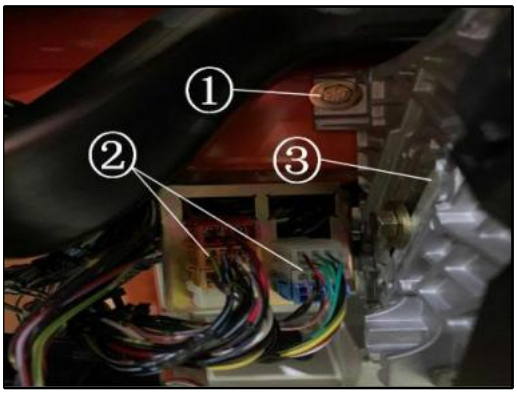

1. Install the steering column sub-assembly ③ on the front wall module body, and use a 13mm socket wrench to tighten the M8*30 hexagon head assembling bolt ① to 34±2Nm.
2. Connect the steering pipe harness corresponding to the wire number and color, and lock the connector in place.

Install the steering column mounting bracket

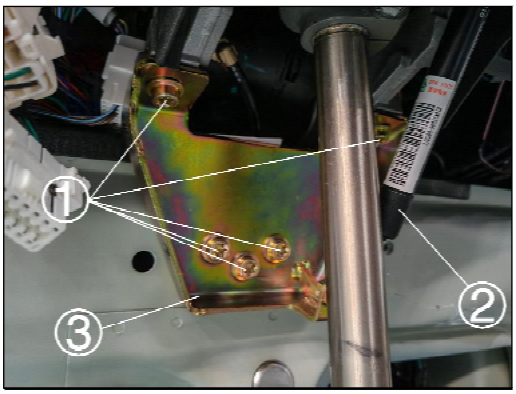

1. Install the bracket ④ on the cab body, and tighten the M8*31 shoulder bolt ② with a T45 socket to 34±2Nm.
2. Use a T45 socket and M8*25 shoulder bolt ① to fix the upper part of the bracket to the steering column with a tightening torque of 34±2Nm.
3. Install the gas spring on the ball stud of the steering column and bracket.

Install the telescopic shaft

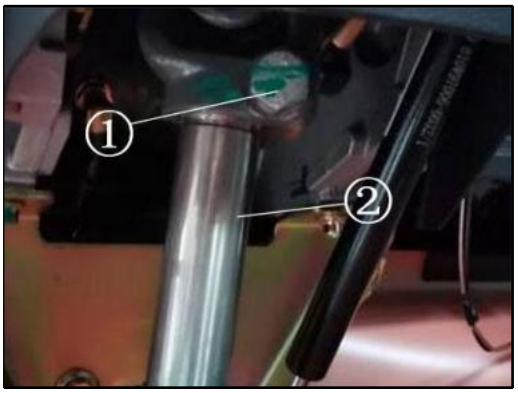

1. Apply 2271 threadlocker to the bolt ① from the bottom to the middle.
2. Align the attached green paint mark of the telescopic shaft ② with the slot of the steering column universal joint for installation, and use a 16mm socket wrench to tighten the M10*55 hexagon head bolt ① to 55-60Nm.

Install the steering wheel assembly





1. Align the steering wheel ① with the column barrel spline and press it down smoothly; Insert the locating pin into the locating hole, and tighten the attached M22 hexagon nut ④ with a 32mm socket to 67±5Nm.
2. Connect the steering wheel connector ③ with the clock spring, and lock the connector in place.
3. Align the steering wheel trim cover ① with the hole of the steering wheel body ② and fasten it tightly.

Intake manifold



1. Intake elbow 2. Intercooler front intake pipe 3. Intercooler rear intake pipe 4. Intake throttle valve

Removal of the intercooler front intake pipe

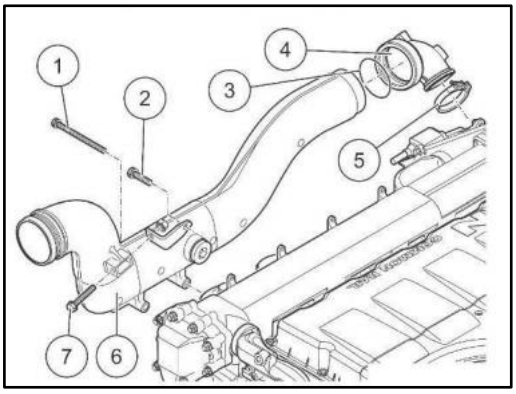

Removal steps

1. Use a 15mm socket wrench to remove the M10*90-10.9 hexagon flange bolts ① (2 pcs), and take out the intercooler front intake pipe.

2. Remove the M8*25-10.9 hexagon flange bolt ② with a 13mm socket, and take out the intake pipe ⑥.

3. Remove the M8*60-10.9 hexagon flange bolt ⑦ with a 13mm socket.

4. Loosen the clamp ⑤, and take out the O-ring ③ and connecting elbow ④.

Installation of the intercooler front intake pipe

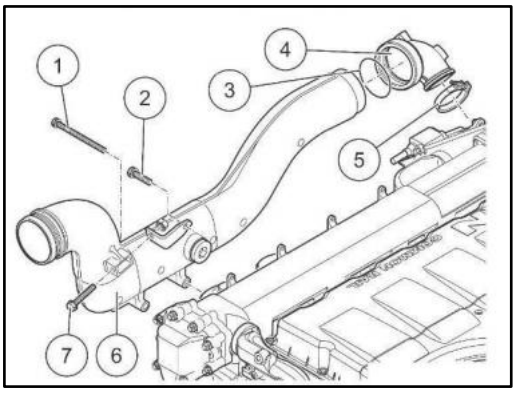

Installation of the intercooler front intake pipe

1. Position and connect the elbow ①, and use the clamp ⑤ for loose installation.

2. Apply Vaseline to the O-ring ③ and install it into the intake elbow ①.

3. Refit the intake pipe ⑥, and use a 15mm socket wrench to tighten the M10*90-10.9 hexagon flange bolts ① (2 pcs) to (65±6) Nm.

4. Use a 10mm socket wrench to tighten the clamp ⑤ to (8.5±1) Nm.

5. Use a 13mm socket wrench to tighten the M8*25-10.9 hexagon flange bolt ② to (30±3) Nm.

6. Use a 13mm socket wrench to tighten the M8*60-10.9 hexagon flange bolt ⑦ (add a gasket at this position, and tighten the bolt end with a nut) to (30±3) Nm.

Auxiliary material: Vaseline

Note: The O-ring is a disposable part.

Remove the intercooler rear intake pipe

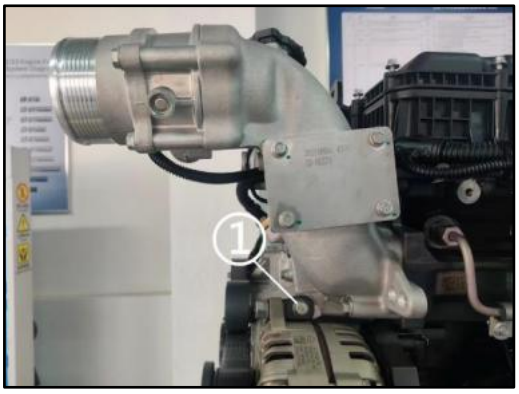

Removal steps

1. Use a 13 mm socket to remove the nut ①.

Remove the intercooler rear intake pipe

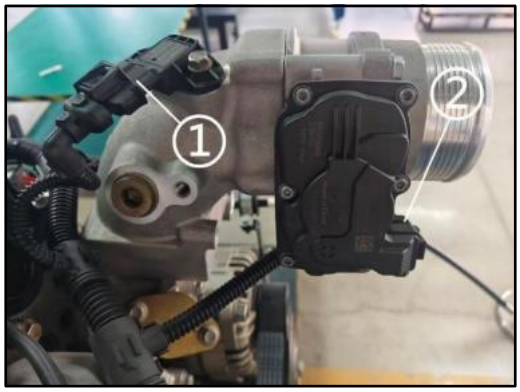

1. Disconnect the plug ① of the intercooler rear intake temperature and pressure sensor and the harness plug ② of the intake throttle valve.

Remove the intercooler rear intake pipe

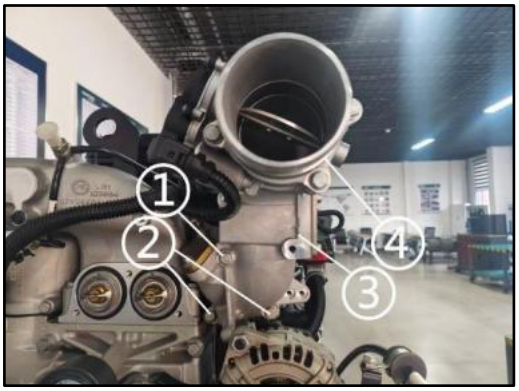

1. Use a 13mm socket wrench to remove one M8×120 hexagon flange bolt ① and two M8×60 hexagon flange bolts ②, and take out the intercooler rear intake pipe ③ and the intake throttle valve ④.

Install the intercooler rear intake pipe



1. Apply the sealant Loctite 5900 to the joint surface.

Auxiliary material: Loctite 5900

Note: Visually inspect that the glue line is continuous, and the exposure time of the glue line is ≤ 24 min.

Install the intercooler rear intake pipe

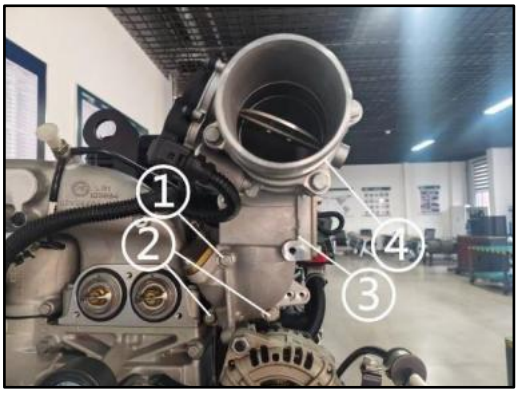

Installation steps

1. Install the intercooler rear intake pipe ③ and intake throttle valve ④ to the cylinder head, and use a 13mm socket wrench to tighten one M8×120 hexagon flange bolt ① and two M8×60 hexagon flange bolts ② to a tightening torque of (30±3) N·m.

Install the intercooler rear intake pipe

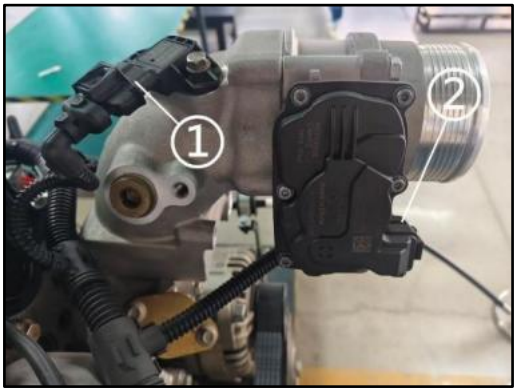

1. Connect the plug ① of the intercooler rear intake temperature and pressure sensor and the harness plug ② of the intake throttle valve.

Install the intercooler rear intake pipe

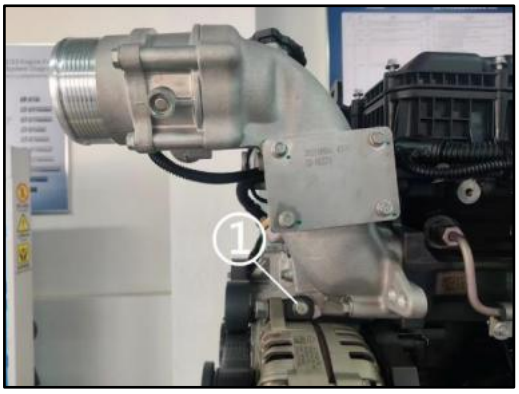

Installation steps

1. Use a 13mm socket wrench to tighten the M8*35 hexagon flange bolt ① (1 piece) to (30±3) Nm.

Cylinder block

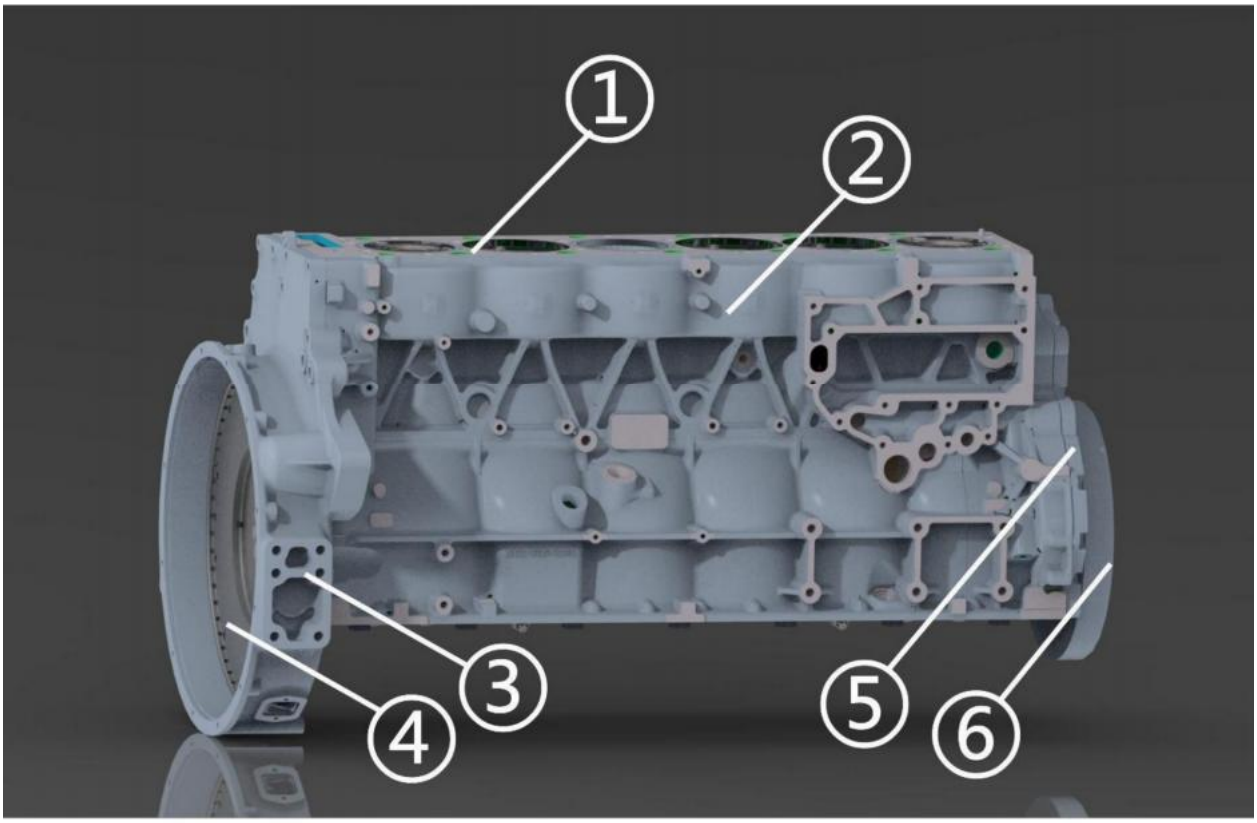

1. Cylinder liner 2. Crankcase 3. Flywheel housing 4. Flywheel 5. Front cover plate 6. Damper

Removal of the flywheel casing

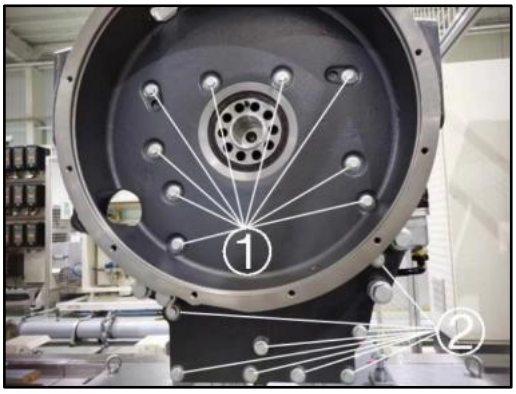

Removal steps

1. Use a 15mm socket wrench to remove the M10*30-10.9 hexagon flange bolts ① (9 pcs).
2. Use a 15mm socket wrench to remove the M10*40-10.9 hexagon flange bolts ② (8 pcs).

Removal of the flywheel casing

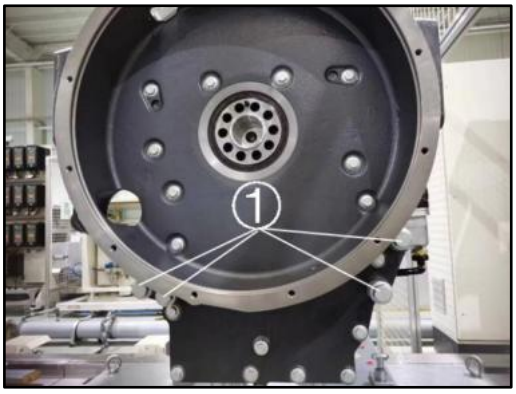

1. Use a 24mm socket wrench to remove the M16*55-10.9 hexagon flange bolts ① (4 pcs), take out the flywheel casing, and clean the joint surface.

Remove the intermediate large gear

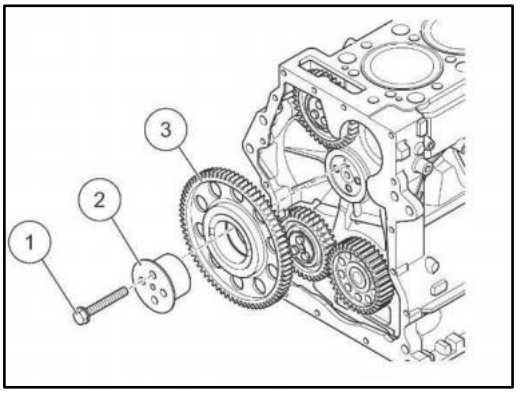

Removal steps

1. Use a 21mm socket wrench to remove the M14*80-10.9 hexagon flange bolts ① (4 pcs), and take out the intermediate gear shaft ② and intermediate bull gear ③.

Remove the crankcase intermediate gear

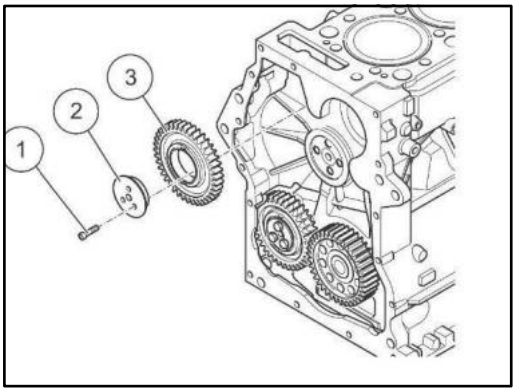

1. Remove the M8*30-10.9 hexagon socket round head bolts ① (3 pcs) with an H6 hexagon socket, and take out the crankcase intermediate gear shaft ② and crankcase intermediate gear ③.

Remove the crankshaft rear gear

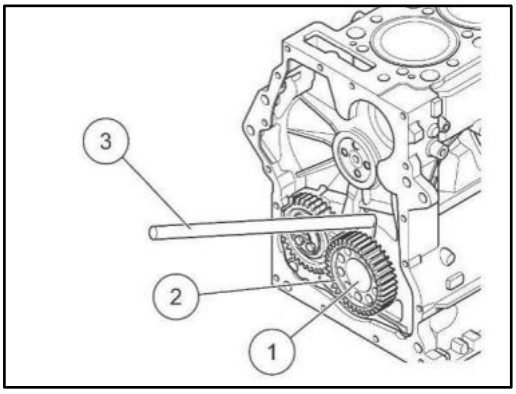

1. Gently press the crankshaft rear gear ② out of the crankshaft ① with a crowbar ③.

Remove the air compressor intermediate gear

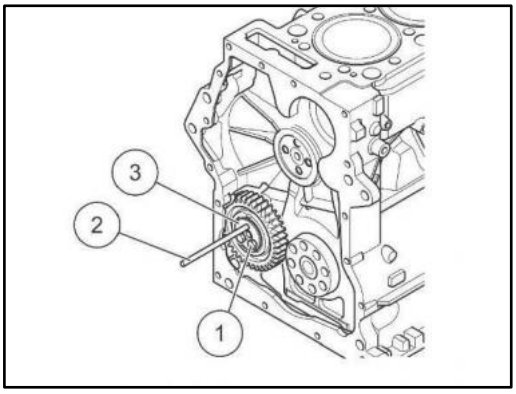

1. Remove the M12*55-10.9 hexagon flange bolts ① (3 pcs) with an 18mm socket wrench.

Remove the air compressor intermediate gear

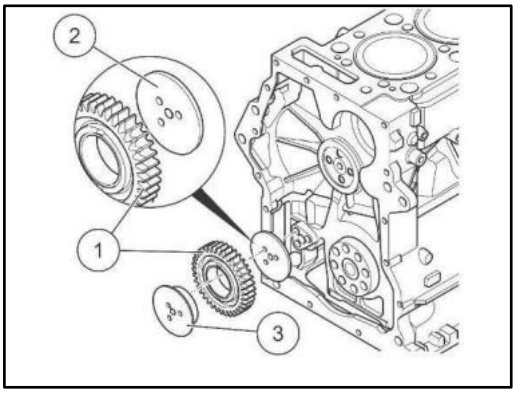

1. Take out the thrust washer ②, air compressor intermediate gear shaft ③ and air compressor intermediate gear ① together.

Insta■ the air compressor intermediate gear

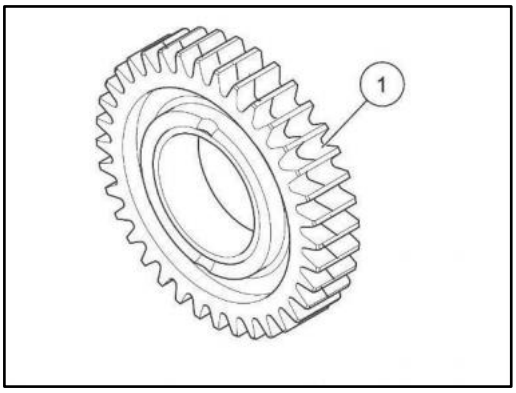

Insta■ation steps

1. The air compressor intermediate gear consists of two pieces, and the wider side ① faces the crankcase during insta■ation.

Install the air compressor intermediate gear

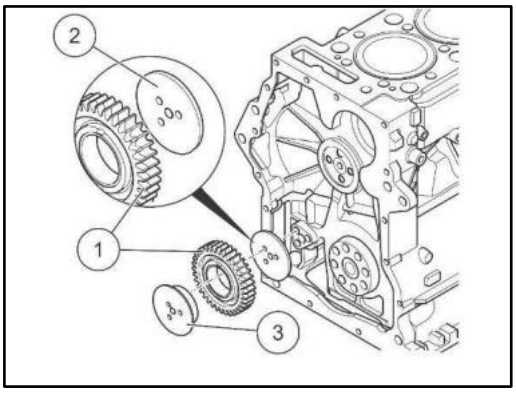

1. Install the air compressor intermediate gear shaft ③ into the air compressor intermediate gear ①.

2. Install the thrust washer ② to the air compressor intermediate gear shaft ③, with the side with a larger chamfer facing the crankcase.

Install the air compressor intermediate gear

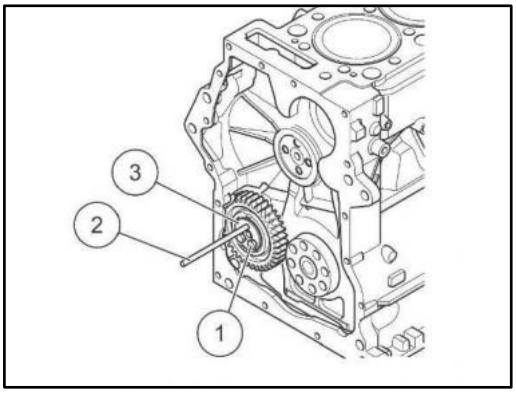

1. Use an 18mm socket wrench to tighten the M12*55-10.9 hexagon flange bolts ① (3 pcs) to (115±11) Nm.

Install the crankcase intermediate gear

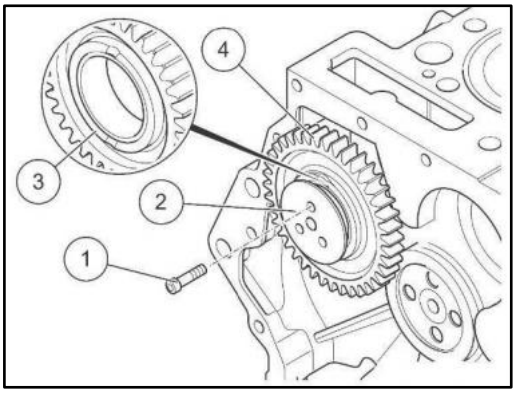

1. Install the crankcase intermediate gear ① with its flat joint surface ③ facing the crankcase intermediate gear shaft ②.
2. Install the crankcase intermediate gear ④ to the crankcase together with the crankcase intermediate gear shaft ②.
3. Tighten the M8*30-10.9 hexagon socket round head bolts ① (3 pcs) to (30~35) Nm with an H6 hexagon socket.

Install the crankshaft rear gear



1. Apply a circle of 574 sealant to the crankshaft rear gear in advance.

Auxiliary material: 574 sealant

Install the crankshaft rear gear

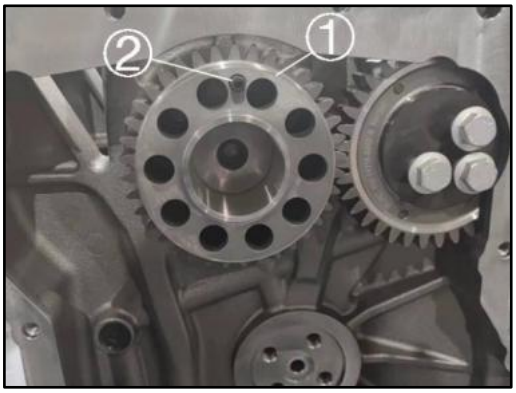

1. Align the rear gear locating pin ② with the crankshaft pin hole, and slowly knock it into the rear end of the crankshaft with a rubber hammer.

Install intermediate large gear

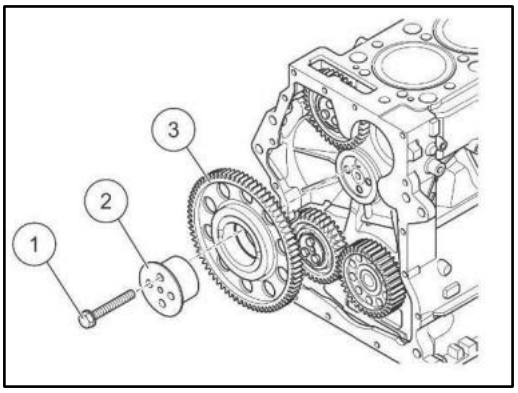

1. Locate the mounting position of the intermediate bull gear, and use a 21mm socket wrench to tighten the M14*80-10.9 hexagon flange bolts ① (4 pcs) to (100±10) Nm + (90±5)° and the final tightening torque of (180~300) Nm.

2. The axial clearance of the intermediate bull gear is (0.100~0.290) mm.

Note: Bolts are disposable parts.

Install intermediate large gear

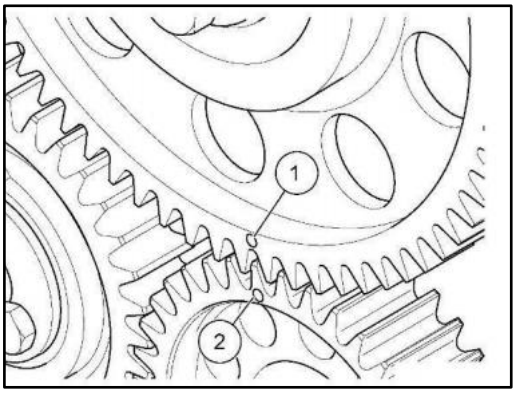

1. After refitting, check that the timing marks of the intermediate bull gear ① and the crankshaft rear gear ② are aligned.

Check the backlash of crankshaft rear gear and intermediate bull gear

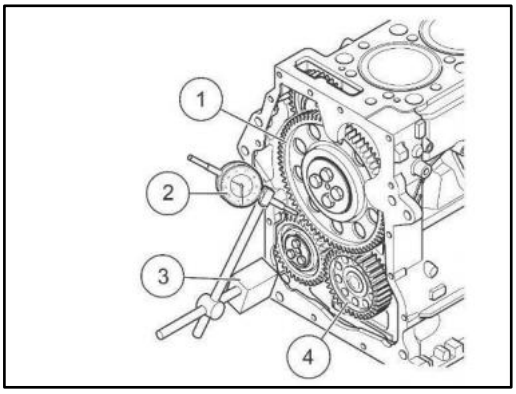

Detection steps

1. Install the dial gauge bracket ③ with dial gauge ②.
2. Measure the backlash between the crankshaft rear gear ① and the intermediate bull gear ①, and the allowable backlash is 0.052-0.176 mm.
3. You can also use a feeler gauge with a specification of 0.02-1.0 mm to measure the backlash when the two teeth are matched.

Check the backlash of crankcase intermediate gear and intermediate bull gear

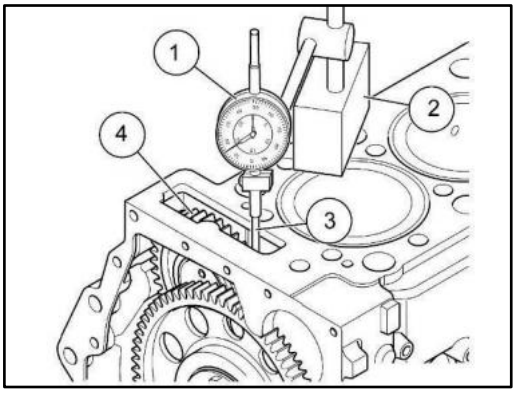

1. Install the dial gauge bracket ② with dial gauge ①.
2. Measure the backlash of crankcase intermediate gear ①, and the allowable backlash is 0.052-0.176 mm.

Installation of the flywheel casing

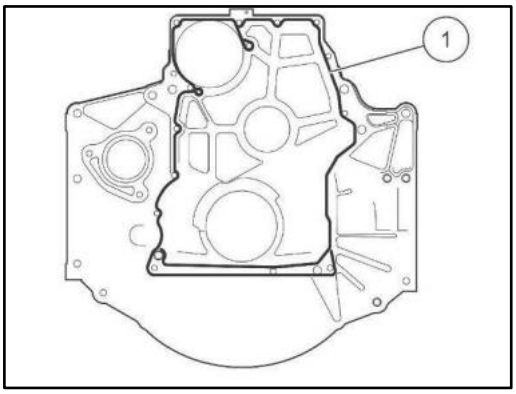

Installation steps

1. Apply the sealant Loctite 5900 to the joint surface ①.

Auxiliary material: Loctite 5900

Note: Visually inspect that the glue line is continuous, and the exposure time of the glue line is ≤ 24 min.

Installation of the flywheel casing

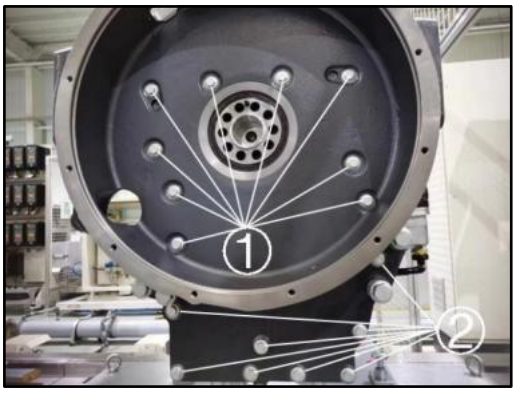

1. Install the flywheel casing to the corresponding position at the rear end of the cylinder block.
2. Use a 15mm socket wrench to tighten the M10*30-10.9 hexagon flange bolts ① (9 pcs) to (65±6) Nm.
3. Use a 15mm socket wrench to tighten the M10*40-10.9 hexagon flange bolts ② (8 pcs) to (65±6) Nm.

Installation of the flywheel casing

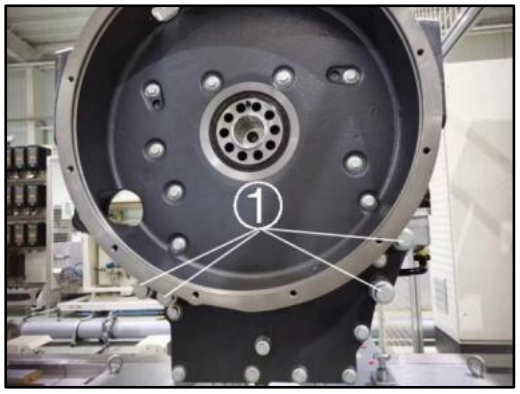

1. Use a 24mm socket wrench to tighten the M16*55-10.9 hexagon flange bolts ① (4 pcs) to (280±28)Nm.

Remove the front cover



Removal steps

1. Remove the M8*25-10.9 hexagon flange bolts ① (13 pcs) and M8*40-10.9 (2 pcs) with a 13mm socket wrench.

Remove the front cover



1. Remove the M12*40-10.9 hexagon flange bolts ① (3 pcs) with an 18mm socket wrench.

Remove the front cover

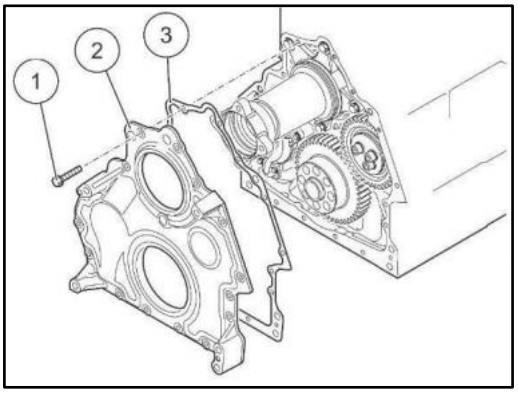

1. Take out the front cover ② and gasket ③, and clean the joint surface.

Install the front cover

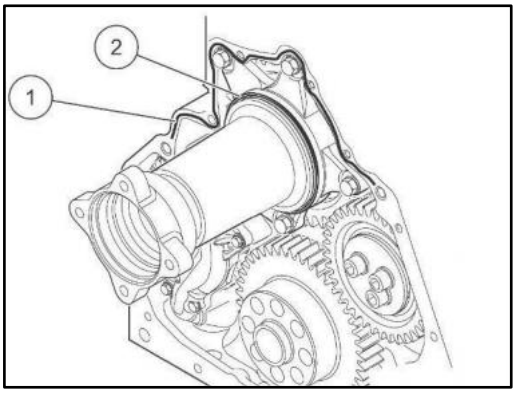

Installation steps

1. Install a new O-ring ② and apply an appropriate amount of Vaseline to the O-ring ②.

2. Apply sealant Loctite 5900 to the joint surface ①.

Auxiliary material: Vaseline, Loctite 5900

Note: Visually check that the adhesive line is continuous, the exposure time of the adhesive line is ≤ 24 min, and the O-ring is a disposable part.

Install the front cover

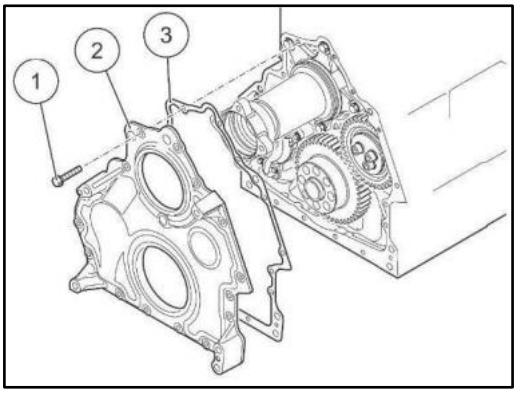

1. Install the front cover ② and gasket ③ to the front end of the crankcase, and confirm that the dowel pin enters the dowel pin hole of the front cover.

Note: The front cover gasket is a disposable part.

Install the front cover



1. Use a 13mm socket wrench to tighten the M8*25-10.9 hexagon flange bolts ① (13 pcs) and M8*40-10.9 Hexagon flange bolts ② (2 pcs) to (30±3) Nm.

Install the front cover



1. Use an 18mm socket wrench to tighten the M12*40-10.9 hexagon flange bolts ① (3 pcs) to (115±11) Nm.

Remove the cylinder liner

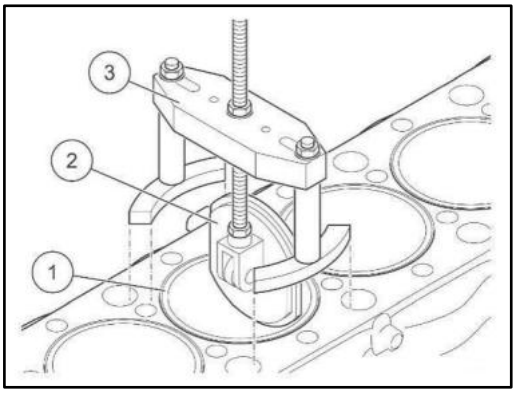

Removal steps

1. Mark the correct arrangement and mounting position of cylinder liner ①, and push the extraction tool ③ and folding extraction plate ② into cylinder liner ① together.

Remove the cylinder liner

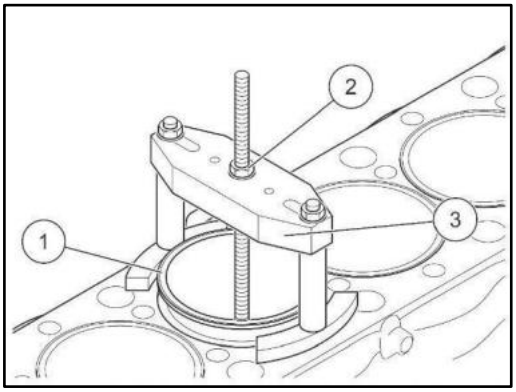

1. Secure the extraction tool ③ with the nut ②, and use the extraction tool ③ to remove the cylinder liner ①, damping ring, and 2 sealing rings.

Install the cylinder liner

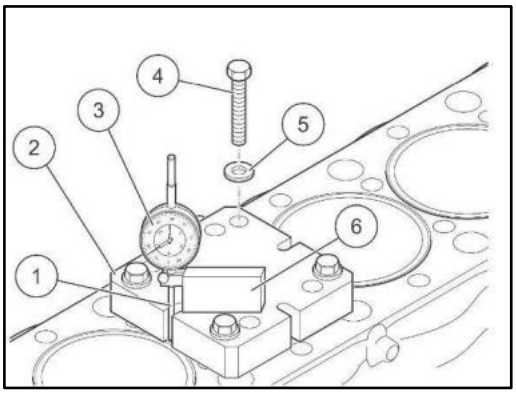

Installation steps

1. Place the probe ① of the dial indicator on the protruding edge of the cylinder liner, zero the dial indicator ③, and allow the cylinder liner protrusion to be 0.035-0.070 mm.

Note: The damping ring and sealing rings must not be installed when measuring the cylinder liner protrusion.

Install the cylinder liner



1. Apply clean lubricating oil to the damping ring ① (1 pc) and sealing rings ② (2 pcs) and install them into the grooves.

Install the cylinder liner

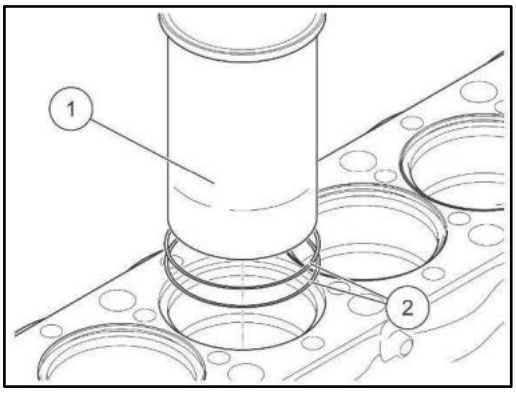

1. Apply oil to the outer circumference of the cylinder liner ① and push it to the bottom.

Remove the engine front left and right brackets

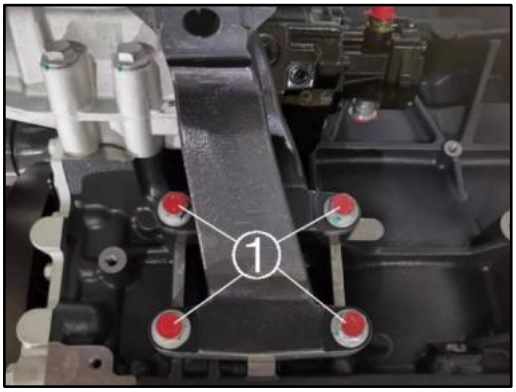

Removal steps

1. Use a 19mm socket wrench to remove the M14*50-12.9 hexagon flange bolts ① (4 pcs), and take out the bracket.

Install the engine front left and right brackets

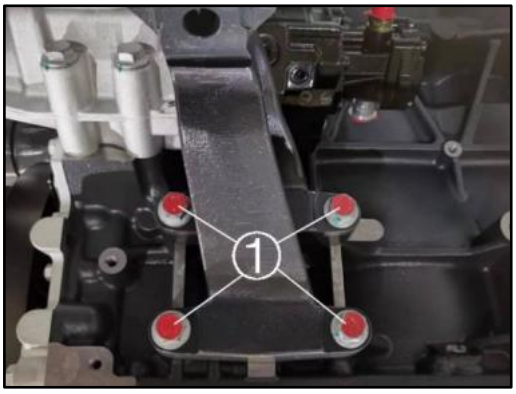

Installation steps

1. Use a 19mm socket wrench to tighten the M14*50-12.9 hexagon flange bolts ① (4 pcs) to (230±23) Nm.

Remove the engine rear left and right brackets

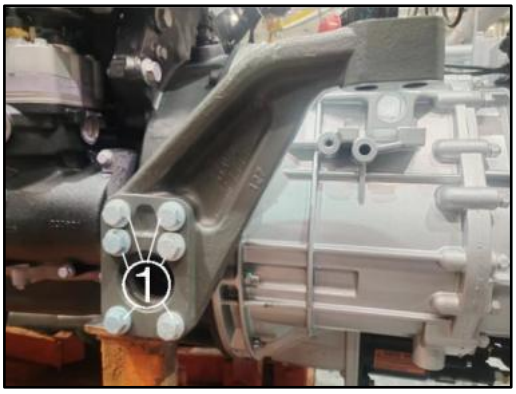

Removal steps

1. Use a 22mm socket wrench to remove the M16*50-12.9 hexagon flange bolts ① (6 pcs), and take out the bracket.

Install the engine rear left and right brackets

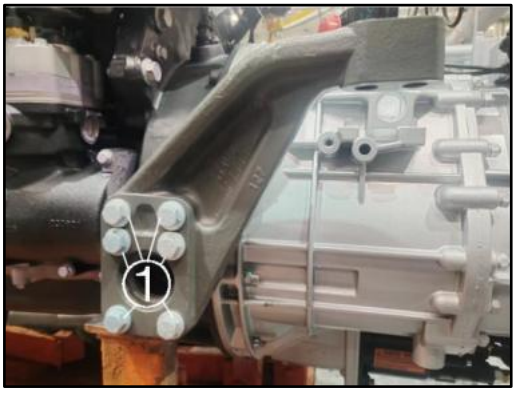

Installation steps

1. Use a 22mm socket wrench to tighten the M16*50-12.9 hexagon flange bolts ① (6 pcs) to (300±30) Nm.

Cylinder head, crank connecting rod mechanism, valve mechanism

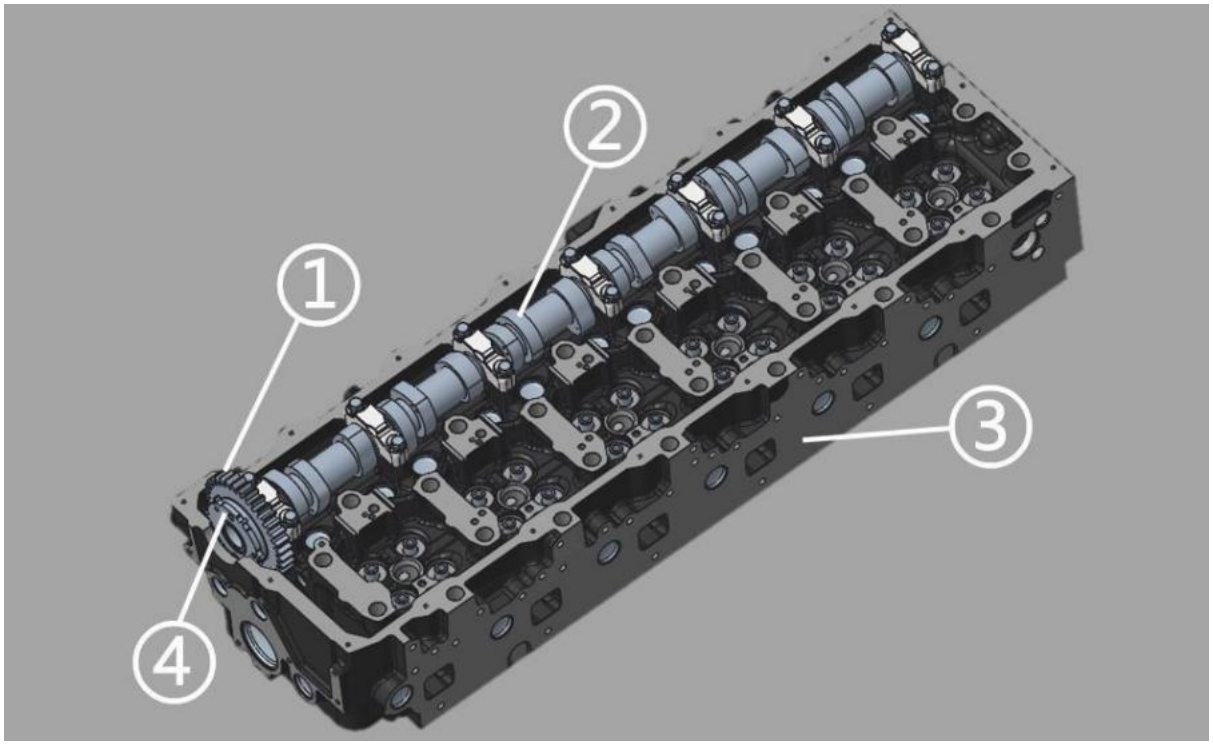

1. Camshaft gear 2. Camshaft 3. Cylinder head 4. Pulse disc

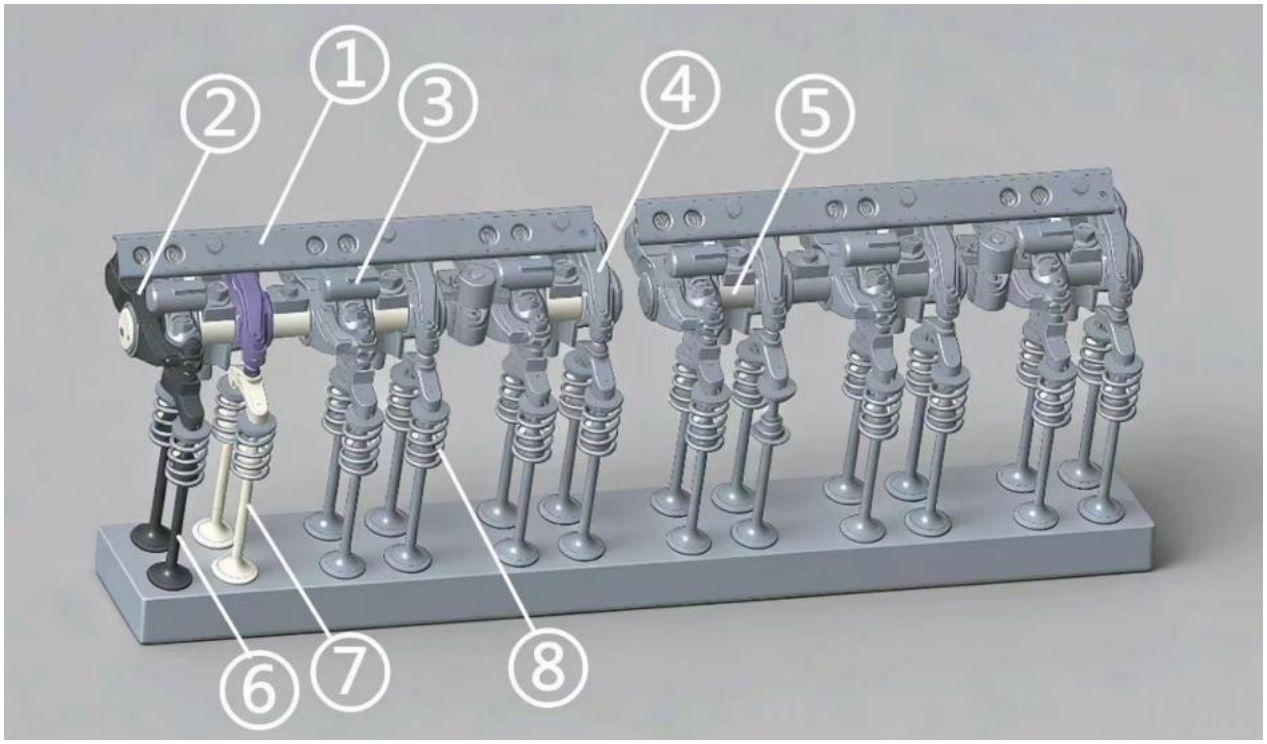

1. Spring rod assembly 2. Exhaust valve rocker arm 3. Brake rocker arm 4. Intake valve rocker arm
5. Rocker arm shaft 6. Exhaust valve 7. Intake valve 8. Valve spring

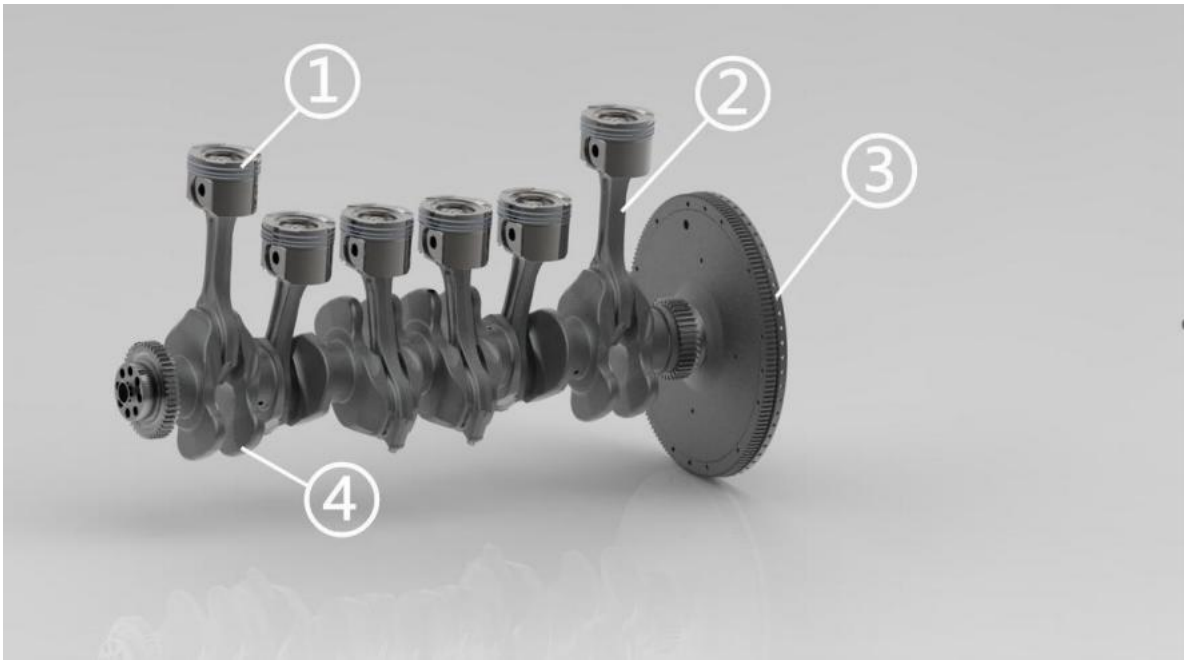

1. Piston 2. Connecting rod 3. Flywheel 4. Crankshaft

Removal of the cylinder head cover

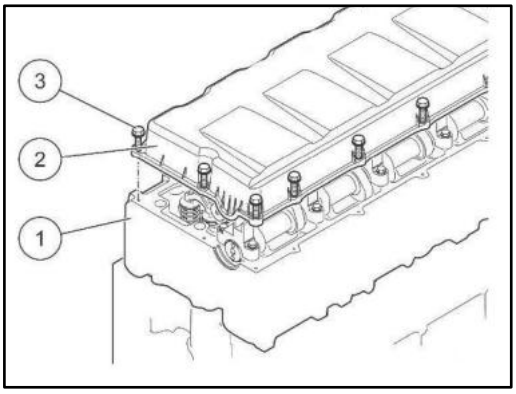

1. Remove the bolts ③ (18 pcs) with a 10mm socket, and take out the cylinder head cover ②.

Remove the rocker arm and EVB pressure plate

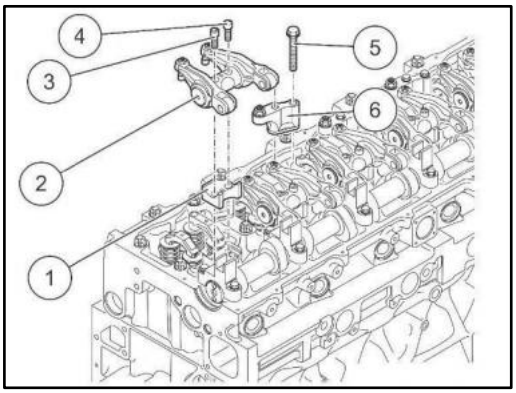

1. Remove the M12*60-10.9 hexagon socket head cap screws ③ and ④ with an H10 hexagon socket, and remove the M10*60-10.9 hexagon flange bolts ⑤ (2 pcs) with a 15mm socket wrench.

Remove the valve bridge

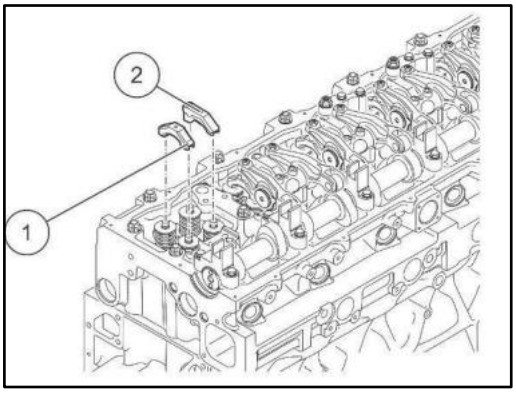

1. Take out the valve bridges ① and ②.

Note: Be careful not to damage the fuel injector during taking the cylinder head inner cavity parts.

Remove the upper cylinder head cover (DRB model)

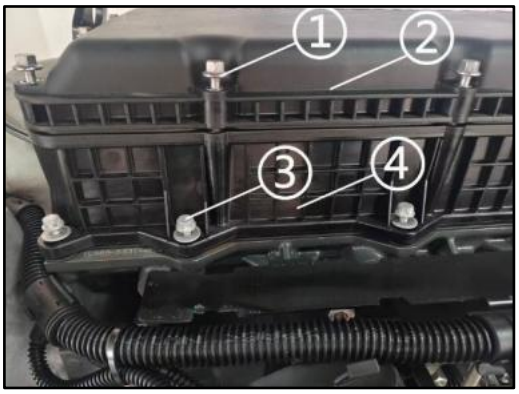

1. Remove the bolts ① (18 pcs) with a 10mm socket, and take out the upper cylinder head cover ②.

Remove the injector harness (DRB model)



1. Rotate the harness plug ① counterclockwise and unplug the harness plug.

Remove the injector harness (DRB model)



1. Pull out the locking plate ① and push the plug ② into the cylinder head.

Remove the injector harness (DRB model)

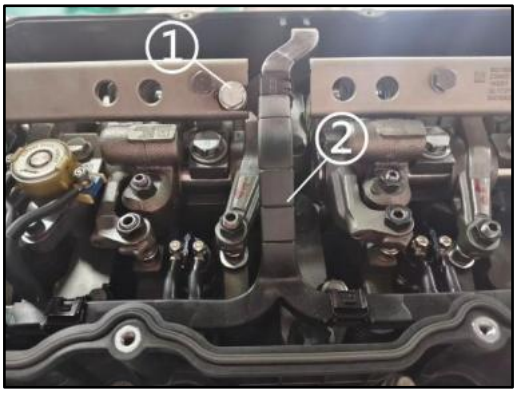

1. Remove the M8*15 hexagon flange bolts ① (6 pcs) with a 13mm socket wrench.

Remove the injector harness (DRB model)

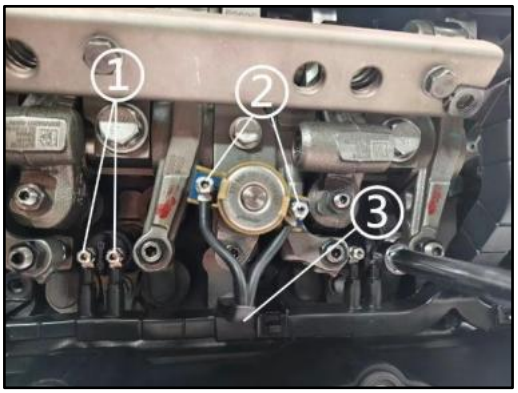

1. Use a 7mm socket to remove the injector harness nut ① and the DRB solenoid valve nut ②, then remove the harness ③.

Remove the lower cylinder head cover (DRB model)

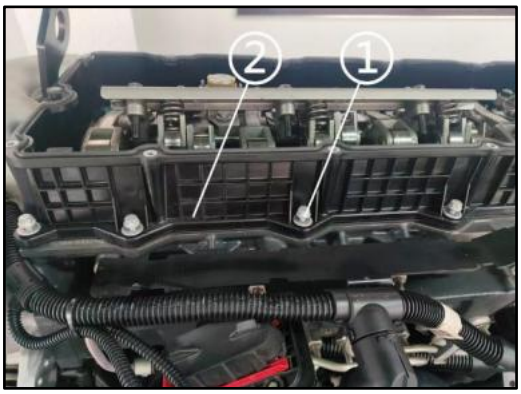

1. Remove the bolts ① (18 pcs) with a 10mm socket, and take out the lower cylinder head cover ②.

Remove the rocker arm (DRB model)

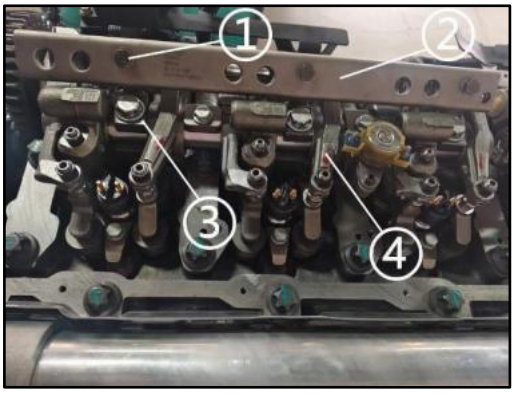

1. Remove the M8×50 hexagon flange bolts ① (3 pcs) with a 13mm socket, and take out the spring rod assembly ②.

2. Remove the M12×80 hexagon flange bolts ③ (3 pcs) with an 18mm socket, and take out the rocker arm assembly ④.

Remove the valve bridge and rocker arm base (DRB model)

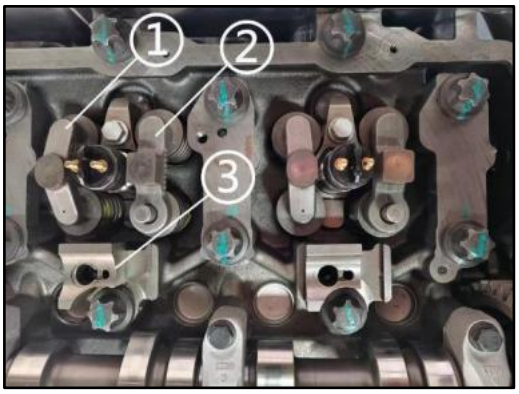

1. Take out the intake valve bridge ①, exhaust valve bridge ②, and rocker arm base ③.

Remove the brake top block (DRB model)

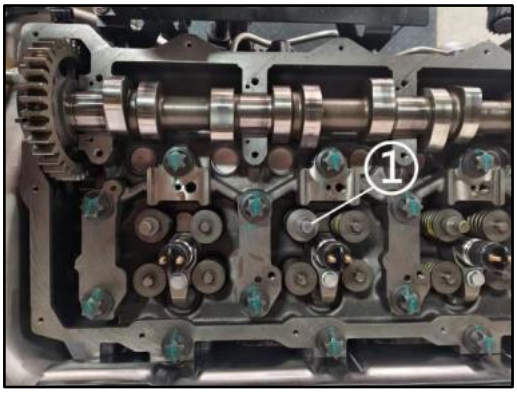

1. Take out the brake top block ①.

Removal of the valve lock clamp

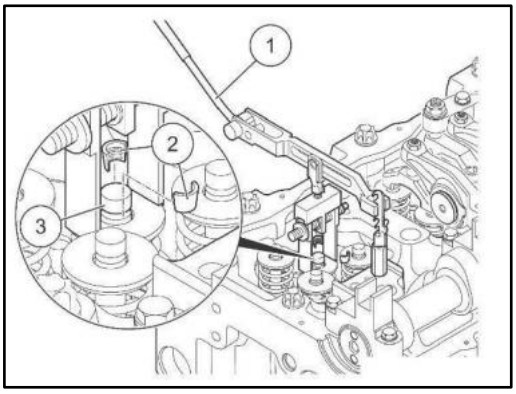

1. Fix the valve lock clamp with a special tool, and press down the extension rod ①.

2. Remove the valve lock clamp ② from the valve stem ③, and take out the washer, spring and spring seat.

3. Repeat the same procedure for all valves, removing special tools.

Note: The valve spring rebounding will cause injury.

Removal of camshaft

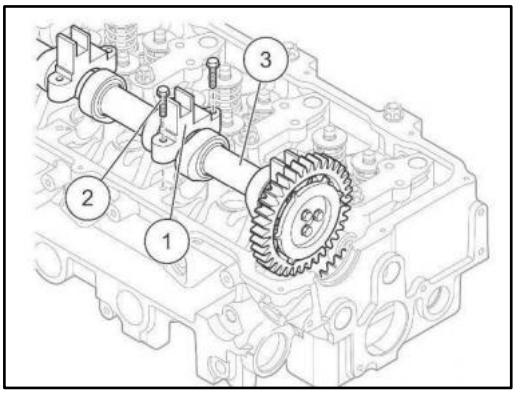

1. Mark the mounting position of the bearing cover ①, take out the bolts ② (2 pcs) with a 13mm socket, mark the mounting position of the camshaft bearing bush, repeat the same procedure for all bearing covers, and remove the camshaft ③.

Camshaft disassembly

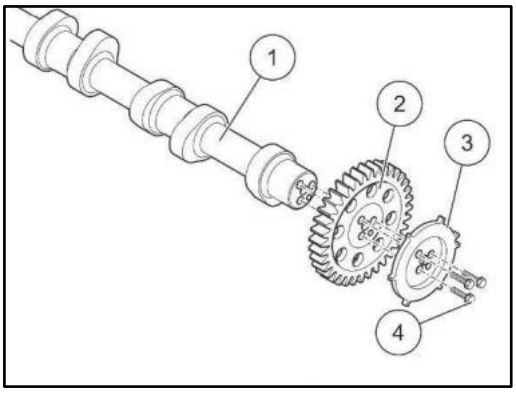

1. Use a 13mm socket wrench to remove the M8*30-10.9 hexagon flange bolts ④ (3 pcs), and take out the pulse disc ③ and camshaft gear ②.

Remove the cylinder head cup plug

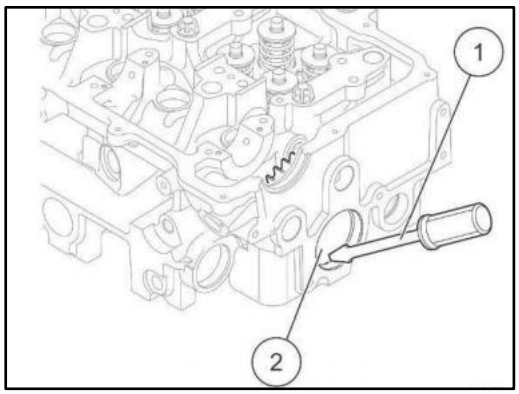

1. Place the screwdriver ① on the lowest edge of the cup plug ②, and pry out the cup plug ②.

Remove the cylinder head intermediate gear

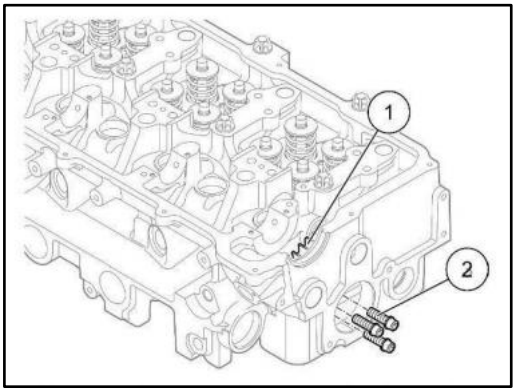

1. Remove the M8*30-10.9 hexagon socket head cap screws ② (3 pcs) with an H6 hexagon socket, and take out the gear ①.

Remove the cylinder head intermediate gear

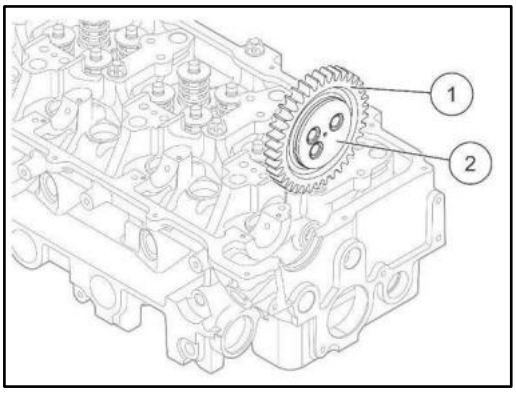

1. Push the intermediate gear shaft ② upward to take out the intermediate gear ①.

Remove the cylinder head

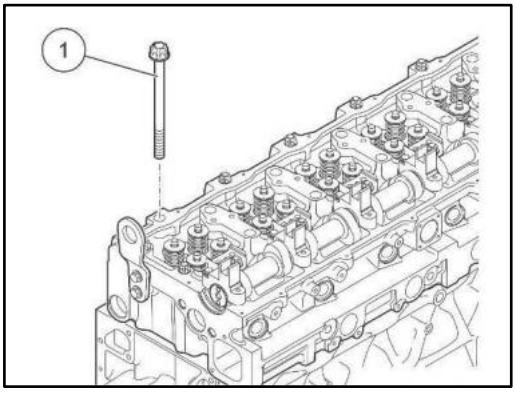

1. Remove the M18*246-10.9 bolts ① (26 pcs) with an E24 socket.

Remove the cylinder head

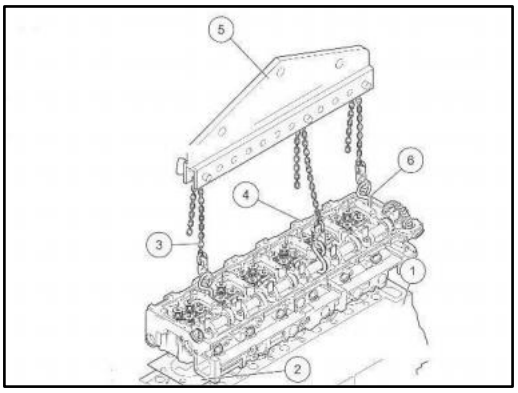

1. The mounting position of the spreader is located on the camshaft ① and the nose bridge ③ and ⑥ of the cylinder head respectively.

2. Lift the cylinder head, take out the cylinder head gasket ②, clean the joint surface between the cylinder head and the crankcase, place the cylinder head stably on the special station appliance and remove the hoist.

Install the valve spring

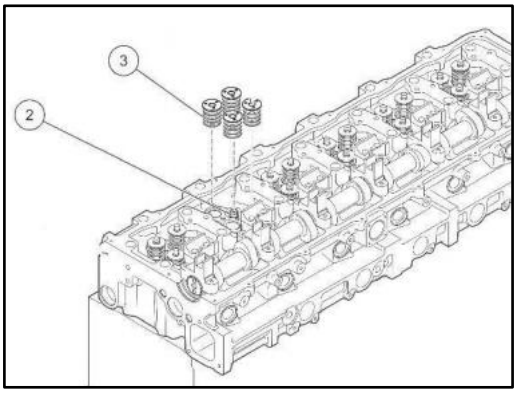

Installation steps

1. Install the valve spring assembly assembly ③ onto the valve stem ②.

Note: The valve spring is a disposable part, and the valve spring shall not be inclined by visual inspection.

Installation of the valve lock clamp

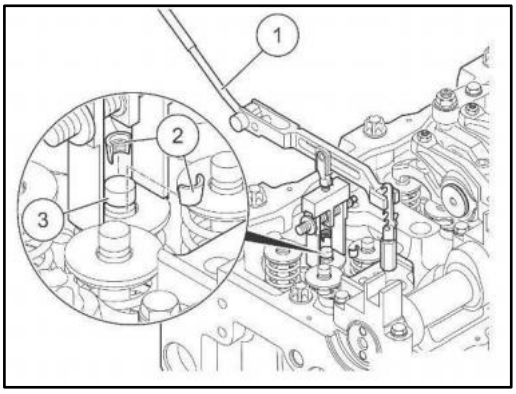

1. Fix the valve lock clamp with a special tool, press the extension rod ①, and install the valve lock clamp ② into the groove of the valve stem ③.
2. Remove the special tool.

Note: The valve lock clamp is a disposable part, and the rebound of the valve spring will cause injury.

Install the cylinder head intermediate gear

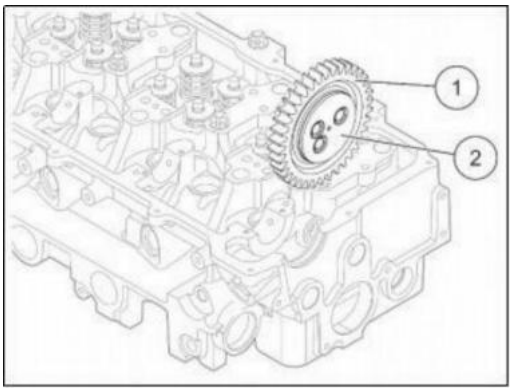

1. Apply an appropriate amount of lubricating oil to the intermediate gear shaft ②, and rotate it for one circle after installing the gear to ensure that the lubricating oil is evenly distributed.

2. With the numbered side of the gear facing outward, place the gear into the rear end of the cylinder head from the lower part of the cylinder head.

Install the cylinder head intermediate gear

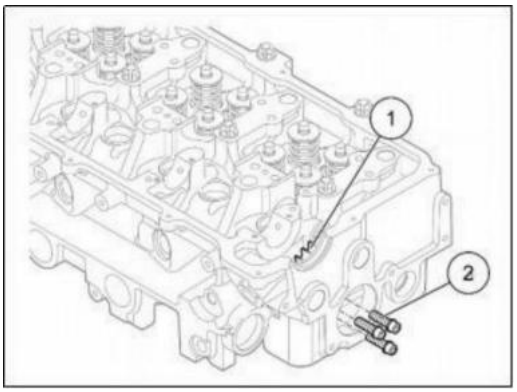

1. Locate the intermediate gear, and tighten the M8*30-10.9 hexagon socket head cap screws ② (3 pcs) to (30±3) Nm with an H6 hexagon socket.

Install the cylinder head cup plug

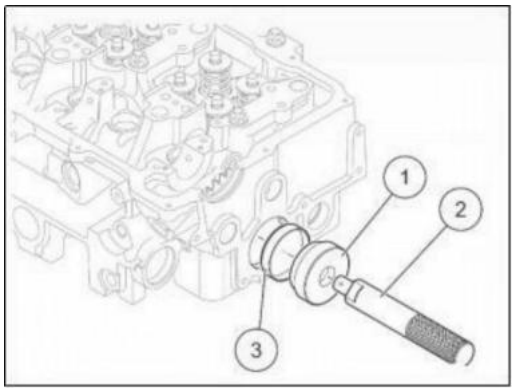

1. Apply Omnifit200 sealant evenly around the bowl plug ③, and use a special tool to knock the bowl plug into the rear end of the cylinder head. The bowl plug shall not be deflected, and there shall be no foreign matters in the sealant and the sealant application position. After installation, clean the overflow sealant around the bowl plug.

Auxiliary materials: lubricating oil, Omnifit200 sealant

Note: Check the appearance of the gear shaft and gear before installation to ensure that there is no foreign matter or high point, and the shaft hole is unblocked without defects.

Install the cylinder head

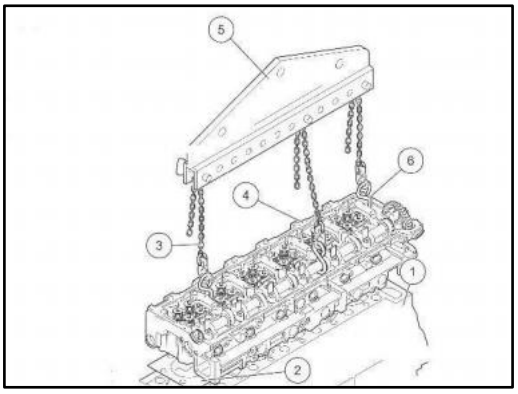

Installation steps

1. Lift the cylinder head assembly and gently drop it onto the upper surface of the crankcase. Check the combustion chamber before dropping the cylinder head. The surface of the cylinder head gasket is free of damage and the inner cavity of the cylinder head is free of foreign matters.

Note: Make sure that the flywheel is at the OT mark before the cylinder head falls.

Install the cylinder head

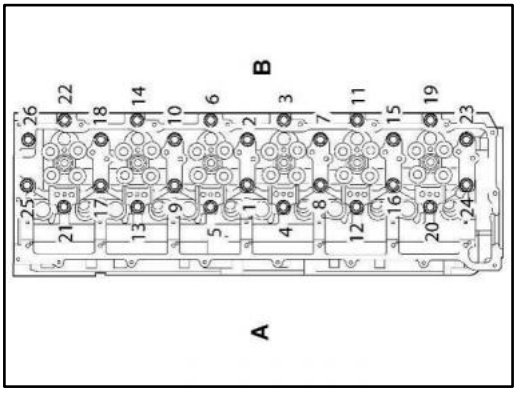

1. Tighten the cylinder head bolts in the sequence shown (1 to 26).

Install the cylinder head

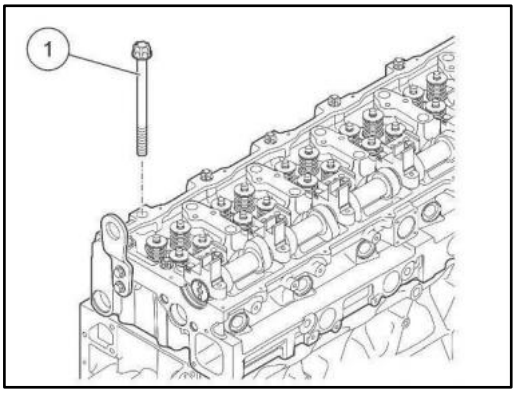

1. Use an E24 socket wrench to tighten the M18*246-10.9 bolts ① (26 pcs), apply a small amount of White T grease to the bolt support surface before installation, and pre-tighten to (10±1) Nm from the middle to both sides.

2. Tightening method: (150±20)Nm + (300±20) Nm + (90±5)° + (90± 5)° + (90±5) °, and the final tightening torque is (330~600)Nm.

Auxiliary material: White T grease

Note: The cylinder head main bolt is a disposable part, and the cylinder head gasket is a disposable part.

Installation of the camshaft

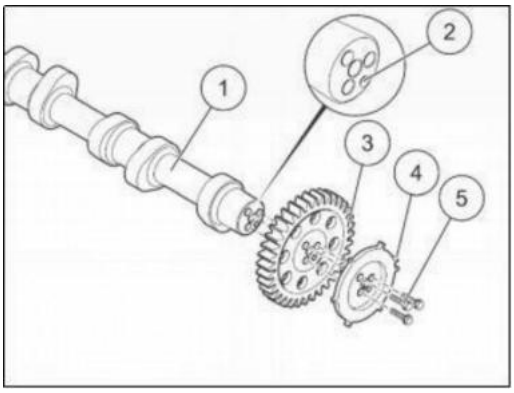

1. Sub-assemble the camshaft gear ③ and pulse disc ④ onto the camshaft ①. If they are not installed in place, gently knock them in place with a rubber hammer, and tighten the M8*30-10.9 hexagon flange bolts ⑤ (3 pcs) with a 13mm socket.

2. Tighten the bolts on both sides of the cylindrical pin first, and then tighten the remaining one to the torque of (15±1)Nm+(90±3)° and the final torque of (35-55)Nm.

Note: Bolts are disposable parts.

Installation of the camshaft

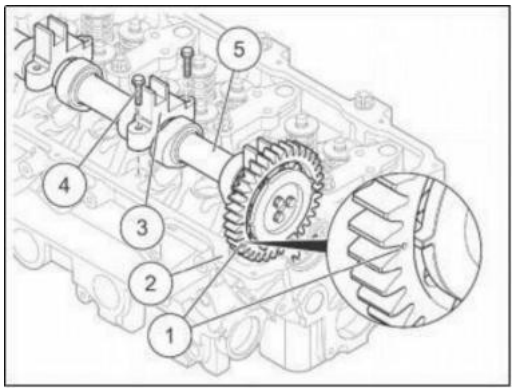

1. Drop an appropriate amount of lubricating oil into the lower bearing bush, gently drop the camshaft into the cylinder head camshaft bearing, and manually rotate the camshaft gear by 360 degrees to ensure that the camshaft is fully lubricated.

2. Tighten the camshaft shaft cover bolts ④ (2 pcs) with a 13mm socket wrench in the order of cylinder 4-5-3-2-6-7-1 to (24-27) Nm, and rotate the camshaft gear manually without seizure.

3. The axial clearance of camshaft is (0.25~0.65) mm.

Auxiliary material: lubricating oil

Note: visually check that the bearing cover corresponds to the bearing pedestal mark.

Install the valve bridge

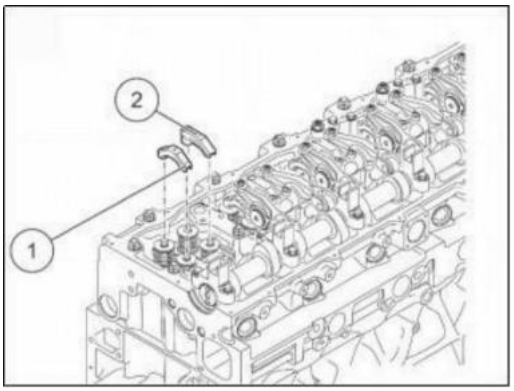

1. As shown in the figure, the notches of the valve bridges ① and ② must face the camshaft.

Install the rocker arm assembly

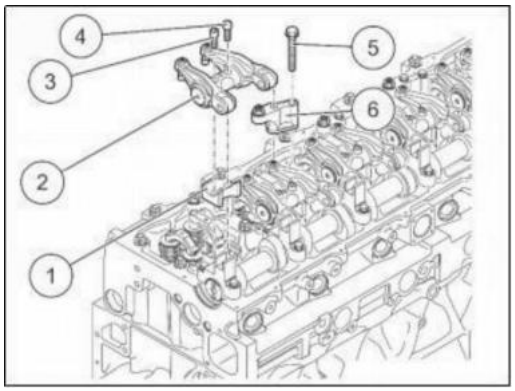

1. Install the EVB pressure plate ⑥ to the corresponding position of the cylinder head, and use a 15mm socket wrench to tighten the M10*60-10.9 hexagon flange bolts ⑤ (2 pcs) to (65~72) Nm.

2. Install the rocker arm assembly ② to the corresponding position of the cylinder head, and use H10 hexagon socket to tighten the M12*60-10.9 hexagon socket head cap screws ③ and ④ to (105~115) Nm.

Adjust intake valve clearance

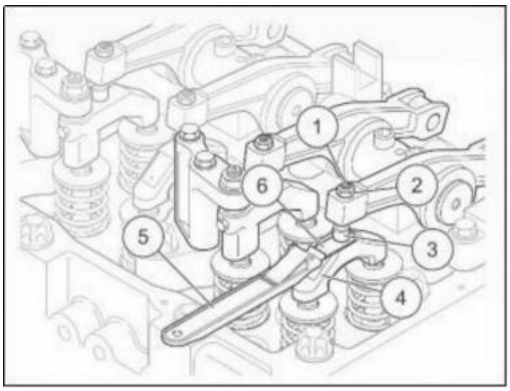

1. Loosen nut ② and adjusting bolt ①, and install a 0.5mm feeler gauge between spherical seat ③ and valve bridge ④.
2. Screw in the adjusting bolt ① until the feeler gauge can move between the spherical seat ③ and the valve bridge ④, and tighten the nut ② to 45Nm when there is a slight resistance.

Adjust exhaust valve clearance

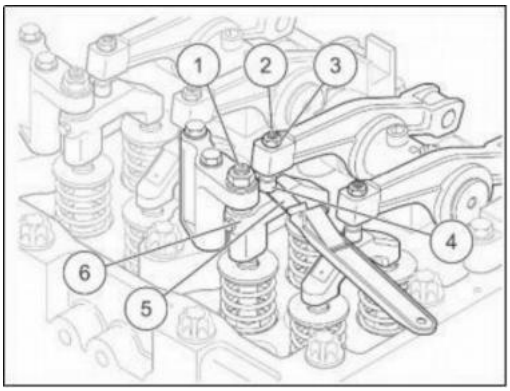

1. Loosen nut ③ and adjusting bolt ②, and install a 0.8mm feeler gauge between spherical seat ① and valve bridge ⑥.
2. Screw in the adjusting bolt ② until the feeler gauge can move between the spherical seat ① and the valve bridge ⑥, and tighten the nut ③ to 45Nm when there is a slight resistance.

Adjust EVB clearance

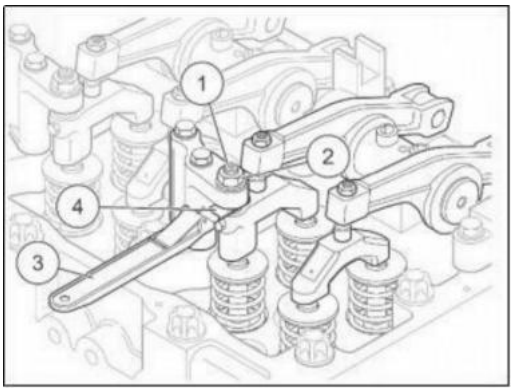

1. Loosen the nut ② and adjusting bolt ①, and install a 0.6mm feeler gauge between the EVB pressure plate and the valve bridge.

2. Screw in the adjusting screw ① until the feeler gauge can move between the EVB pressure plate screw and the valve bridge, and tighten the nut ② to 45Nm when there is a slight resistance.

Note: Turn the flywheel until cylinder 1 is at the top dead center of power, and adjust the intake valve clearance of cylinders 1, 2 and 4, the exhaust valve clearance of 1, 3 and 5 and the EVB clearance in turn with a feeler gauge.

Turn the flywheel to the top dead center of cylinder 6, and adjust the remaining valve clearances to check whether they are within the specified value.

Installation of the cylinder head cover

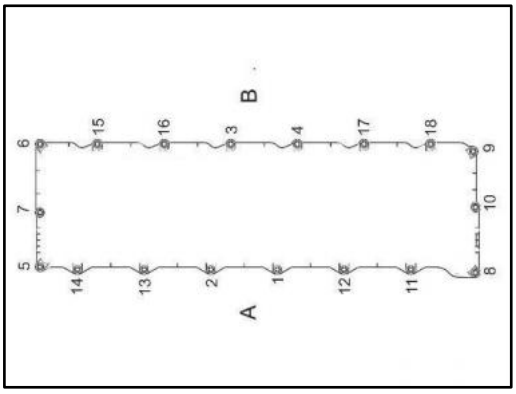

1. Tighten the bolts in strict accordance with the tightening sequence from 1 to 18.

Installation of the cylinder head cover

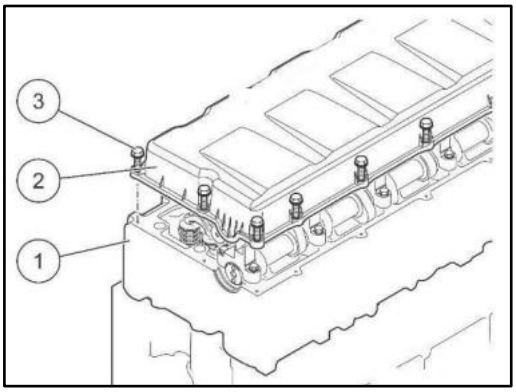

1. Install the cylinder head cover ②, and use a 10mm socket wrench to tighten the bolts ③ (18 pcs) to (10±1) Nm.

Note: Check that there is no foreign matter in the cylinder head before installation.

Install the wire harness box

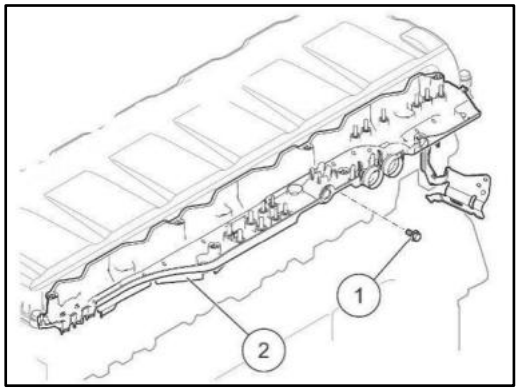

1. Position the wire harness box ②, use a 10mm socket to tighten the M6×16-10.9 hexagon flange bolts ① (7 pcs); tightening torque: (8±1) N·m.

Install the wire harness cover

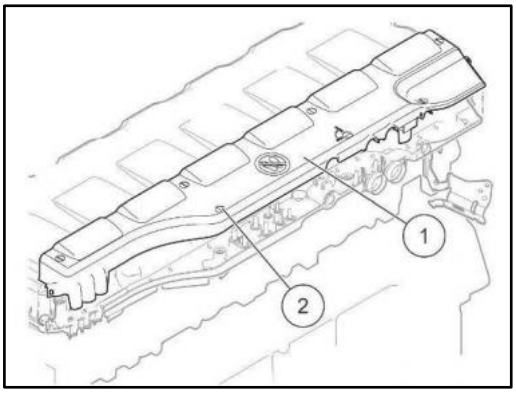

1. Position the wire harness cover, and use a flat-head screwdriver to unscrew the knobs ② (7 pcs) on the wire harness box clockwise.

Install the connecting plug

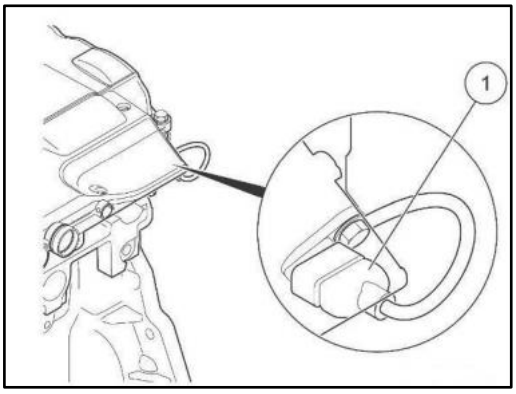

1. Connect the speed sensor electrical connection plug ①.

Install the brake top block (DRB model)

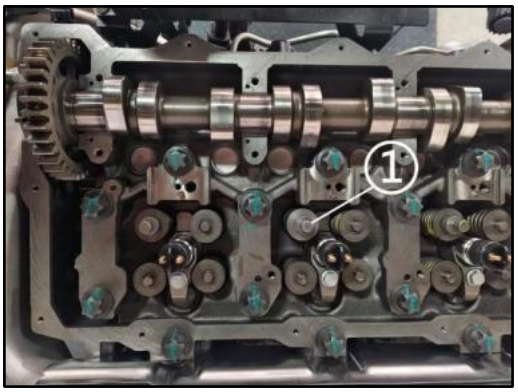

Installation steps

1. Install the brake top block ① onto the exhaust valve.

Install the valve bridge and rocker arm base (DRB model)

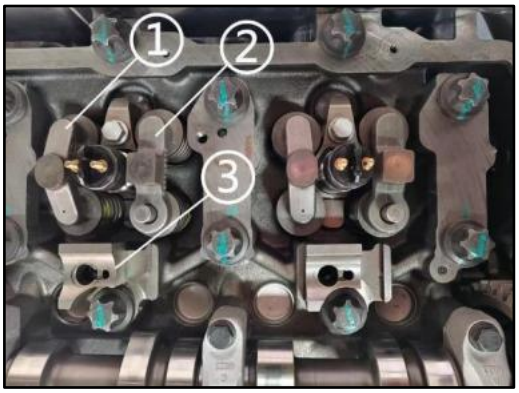

1. Install the intake valve bridge ①, exhaust valve bridge ②, and rocker arm base ③ into position.

Install the valve bridge and rocker arm base (DRB model)



1. The opening direction of the intake valve bridge and exhaust valve bridge ① faces the exhaust side.

Install the rocker arm (DRB model)

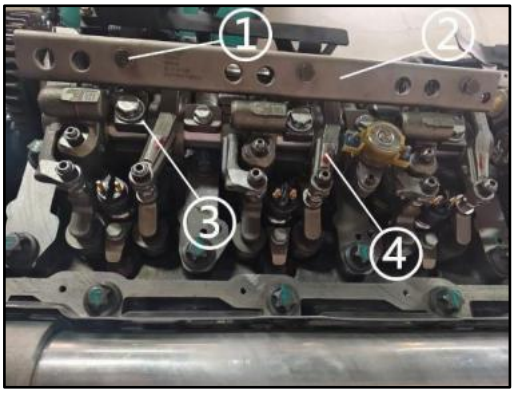

1. Install the rocker arm assembly ① into position, and use an 18mm socket to tighten the M12×80 hexagon flange bolts ③ (3 pcs); tightening torque: (105+5) N·m.

2. Install the spring rod assembly ② into position, and use a 13mm socket to tighten the M8×50 hexagon flange bolts ① (3 pcs); tightening torque: (35±3) N·m.

Valve clearance adjustment (DRB model)



1. Rotate the engine to the top dead center (TDC) of cylinder 1, continue rotating 80° past TDC of cylinder 1, and use a feeler gauge to adjust the intake valve clearance of cylinders 1 and 4, and the exhaust valve clearance of cylinders 3 and 5.
2. Rotate 310° past TDC of cylinder 1, and use a feeler gauge to adjust the intake valve clearance of cylinders 3 and 5, and the exhaust valve clearance of cylinders 2 and 6.
3. Rotate 560° past TDC of cylinder 1, and use a feeler gauge to adjust the intake valve clearance of cylinders 2 and 6, and the exhaust valve clearance of cylinders 1 and 4.
4. Continue rotating 60° past TDC of cylinder 1, and use a feeler gauge to adjust the brake rocker arm clearance of cylinder 6.
5. Continue rotating 180° past TDC of cylinder 1, and use a feeler gauge to adjust the brake rocker arm clearance of cylinder 2.
6. Continue rotating 300° past TDC of cylinder 1, and use a feeler gauge to adjust the brake rocker arm clearance of cylinder 4.
7. Continue rotating 420° past TDC of cylinder 1, and use a feeler gauge to adjust the brake rocker arm clearance of cylinder 1.
8. Continue rotating 540° past TDC of cylinder 1, and use a feeler gauge to adjust the brake rocker arm clearance of cylinder 5.
9. Continue rotating 660° past TDC of cylinder 1, and use a feeler gauge to adjust the brake rocker arm clearance of cylinder 3.

After the valve clearance adjustment is completed, verify the torque of the intake/exhaust rocker arm nuts and the brake rocker arm nuts with a standard torque wrench, and mark them with a blue alcohol marker.

Note: There are 36 teeth in total, and one tooth represents 20°.

Adjusting intake valve clearance (DRB model)

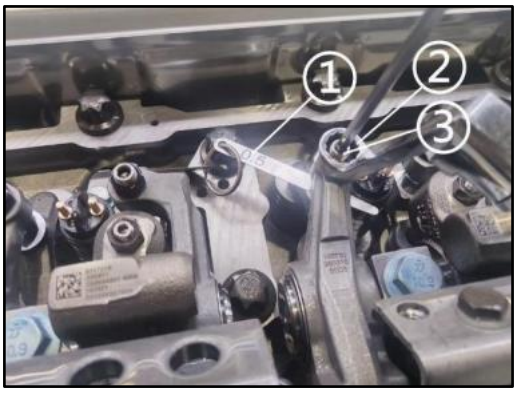

1. Loosen the nut ② and the adjusting bolt ③, and install a 0.5mm feeler gauge ① between the spherical seat and the valve bridge.

2. Screw in the adjusting bolt ③ until the feeler gauge can move between the spherical seat and the valve bridge with slight resistance, then tighten the nut ② to a tightening torque of 45 N·m.

Adjusting exhaust valve clearance (DRB model)

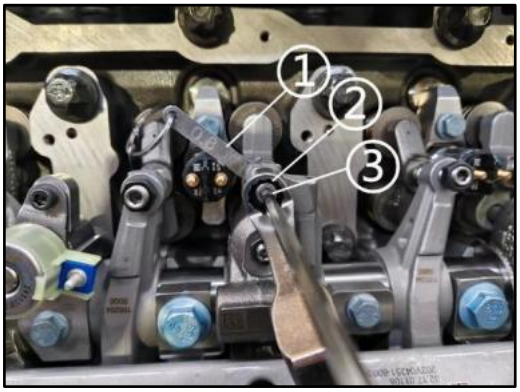

1. Loosen the nut ② and the adjusting bolt ③, and install a 0.8mm feeler gauge ① between the spherical seat and the valve bridge.

2. Screw in the adjusting bolt ③ until the feeler gauge can move between the spherical seat and the valve bridge with slight resistance, then tighten the nut ② to a tightening torque of 45 N·m.

Adjusting DRB clearance (DRB model)

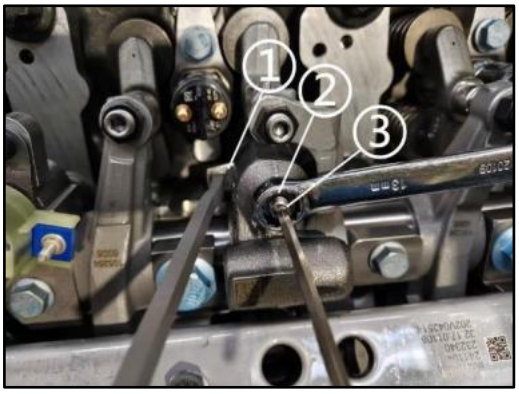

1. Loosen the nut ② and the adjusting bolt ③, and install a 4.2mm feeler gauge ① between the brake piston and the brake push block.

2. Screw in the adjusting bolt ③ until the feeler gauge can move between the brake piston and the brake push block with slight resistance, then tighten the nut ② to a tightening torque of 45 N·m.

Installing the lower cylinder head cover (DRB model)

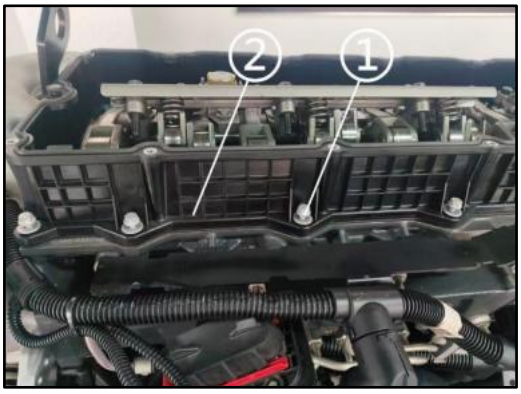

1. Install the lower cylinder head cover ② into position, and use a 10mm socket to tighten the bolts ① (18 pcs) to a tightening torque of (10+1) N·m.

Note: The tightening sequence for the cylinder head cover bolts is the same as that for the EVB model.

Installing the injector harness (DRB model)



1. Install the injector harness ② into position, and lock it using the locking plate ①.

Installing the injector harness (DRB model)

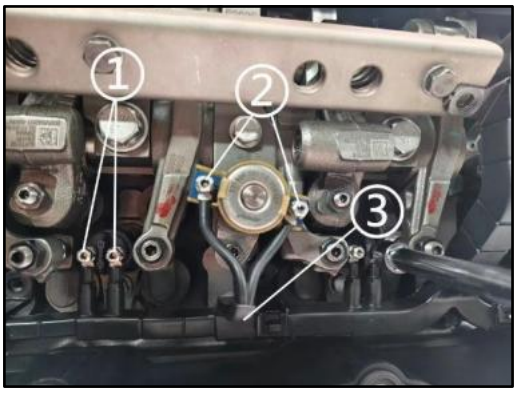

1. Hand-tighten the DRB solenoid valve harness nut ② and the injector harness nut ① by 2-3 threads, then use a 7mm socket to tighten them to a torque of 2 N·m.

Installing the injector harness (DRB model)

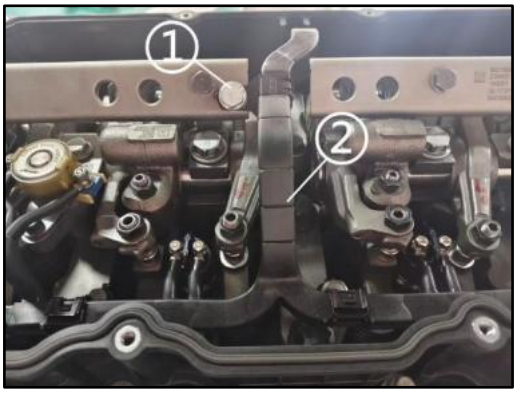

1. Use a 13mm socket to tighten the M8×15 hexagon flange bolts ① (6 pcs) to a tightening torque of (35+3) N·m.

Installing the upper cylinder head cover (DRB model)

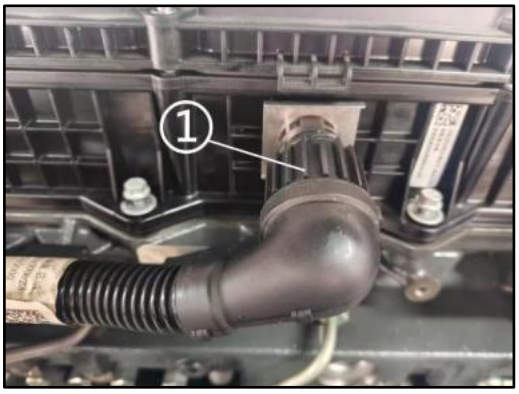

1. Rotate the harness plug ① clockwise into position.

Note: The plug must be aligned before insertion.

Installing the injector harness (DRB model)

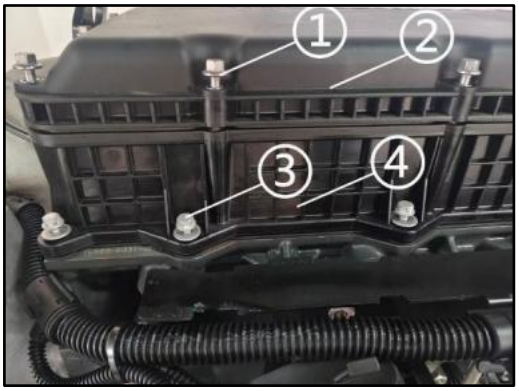

1. Install the upper cylinder head cover ② into position, and use a 10mm socket to tighten the bolts ① (18 pcs) to a tightening torque of (10+1) N·m.

Note: The tightening sequence for the cylinder head cover bolts is the same as that for the EVB model.

Remove the front lifting ring

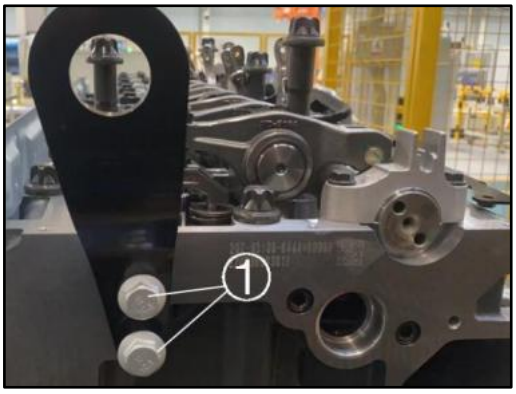

Removal steps

1. Use an 18mm socket wrench to remove the M12*25-10.9 hexagon flange bolts ① (2 pcs), and take out the front lifting ring.

Install the front lifting ring

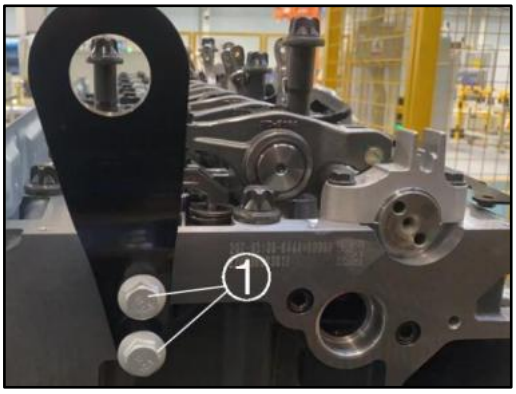

Installation steps

1. Use an 18mm socket wrench to tighten the M12*25-10.9 hexagon flange bolts ① (2 pcs) to (110±11) Nm.

Installation of crankshaft rotating device

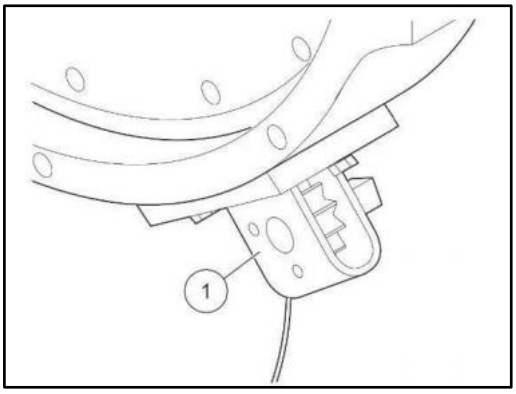

Installation steps

1. Install and lock the engine crankshaft rotating device ① on the flywheel casing.

Removal of shock absorber

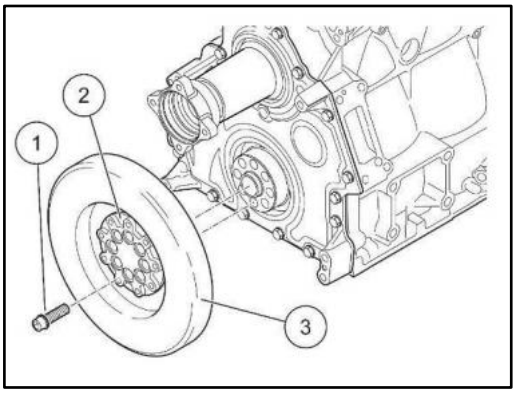

1. Remove the M16*100-10.9 hexagon socket bolts ① (8 pcs) with an H14 hexagon socket, and take out the shock absorber ③.

Remove the shock absorber hub

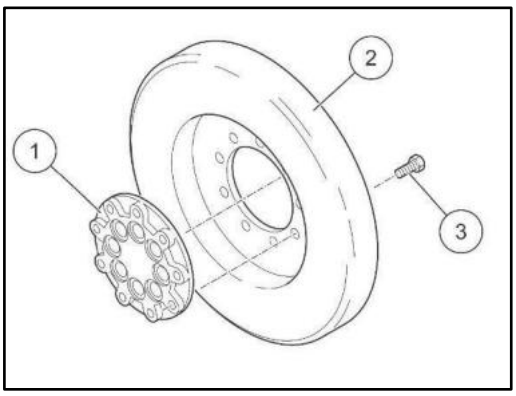

1. Use a 15mm socket wrench to remove the M10*25-10.9 hexagon flange bolts ③ (9 pcs), and take out the hub ①.

Install the shock absorber hub

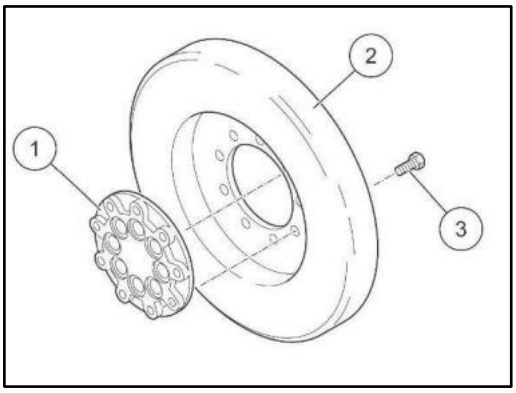

Installation steps

1. Put the hub ① into the corresponding position of the shock absorber ②.

2. Use a 15mm socket wrench to tighten the M10*25-10.9 hexagon flange bolts ③ (9 pcs) to (65~70) Nm.

Installation of the shock absorber

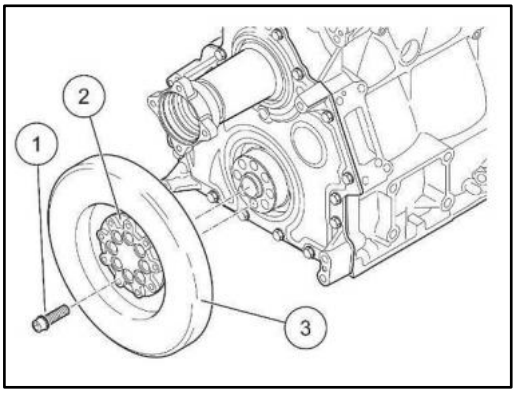

1. Install the shock absorber ③ to the crankshaft.

2. Tighten the M16*100-10.9 hexagon socket bolts ① (8 pcs) with an H14 hexagon socket to (150+10) Nm+ (90+10)°, and the final tightening torque is (200~450) Nm.

Note: The bolts are disposable parts, and the bolts shall be tightened diagonally.

Remove the crankshaft rotating device

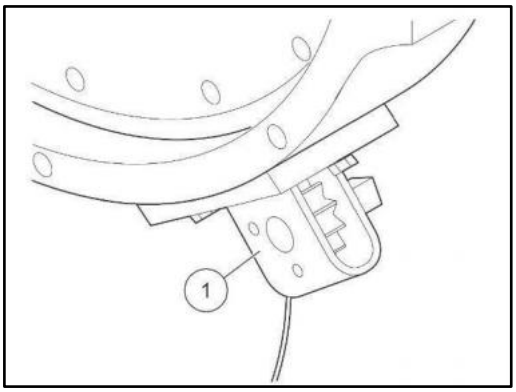

Removal steps

1. Remove the engine crankshaft rotating device ① from the flywheel casing.

Installation of crankshaft rotating device

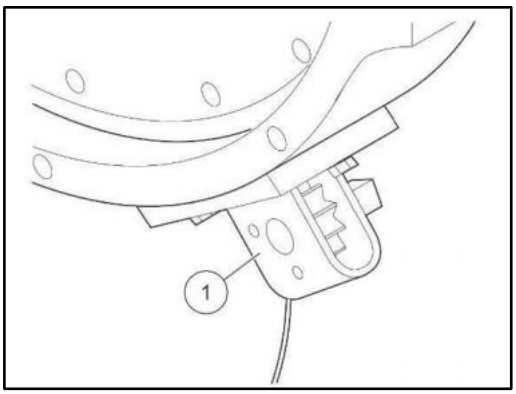

Installation steps

1. Install and lock the engine crankshaft rotating device ① on the flywheel casing.

Removal of the flywheel

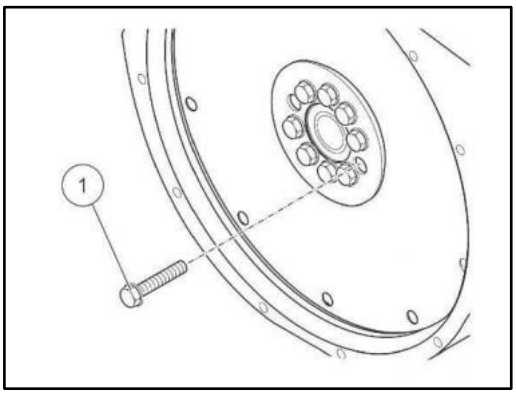

Removal steps

1. Use a 19mm socket wrench to remove the M16*81-12.9 bolts ① (10 pcs), and take out the flywheel.

Installation of the flywheel

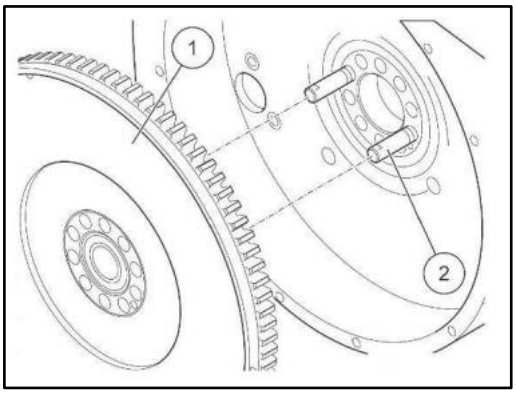

Installation steps

1. Align the flywheel ① with the crankshaft gear dowel pin, and install the flywheel ① to the drift punch ②.

Installation of the flywheel

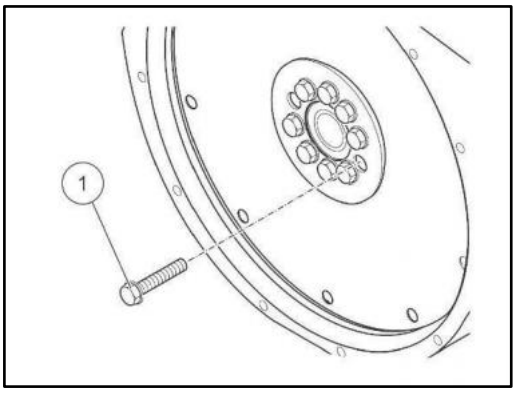

1. Use a 19mm socket wrench to loosely install the M16*81-12.9 bolts ① (10 pcs) to the bottom, and apply an appropriate amount of lubricating oil to the joint surface of the bolt ① before installation.

2. Tightening torque: (100+10) N·m + (180+10)°, final tightening torque: (240~530) N·m.

Auxiliary material: lubricating oil

Note: The flywheel bolt is a disposable part, and the bolt shall be tightened diagonally.

Remove the connecting rod bearing cover

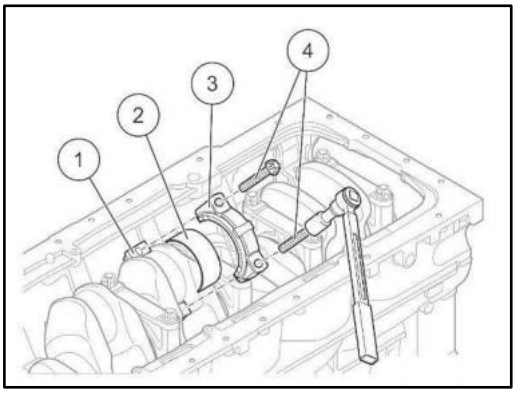

Removal steps

1. Mark the correct arrangement and mounting position of the connecting rod bearing cover ③ and connecting rod bush ② , and remove the connecting rod bolt ①.

2. Remove the connecting rod bearing ② and connecting rod bearing cover ③ together, and push out the piston and connecting rod in the direction of cylinder head.

Remove the piston

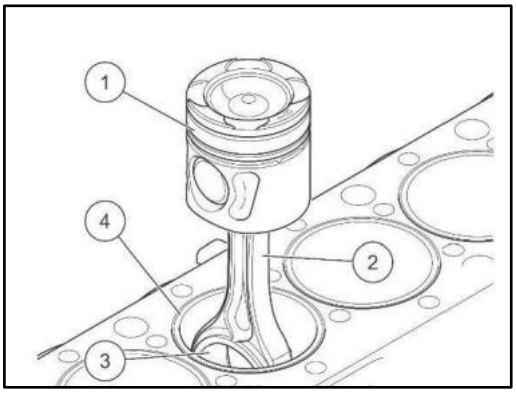

1. Take out the connecting rod ② and piston ① from the cylinder liner ① , mark the correct arrangement and mounting position of connecting rod ② and connecting rod bearing ③, and remove the connecting rod bearing ② from the connecting rod ②.

Removing the carbon scraper ring



1. Remove the carbon scraper ring ① from the cylinder liner ② and clean the mating surfaces.

Remove the piston pin

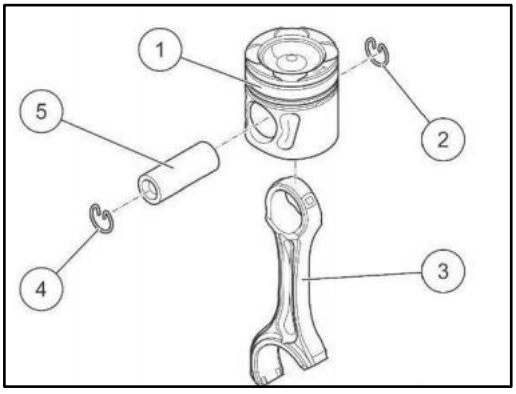

1. Remove the spring collars ② and ④ with circlip pliers, and take out the piston pin ⑤.

Installation of piston ring

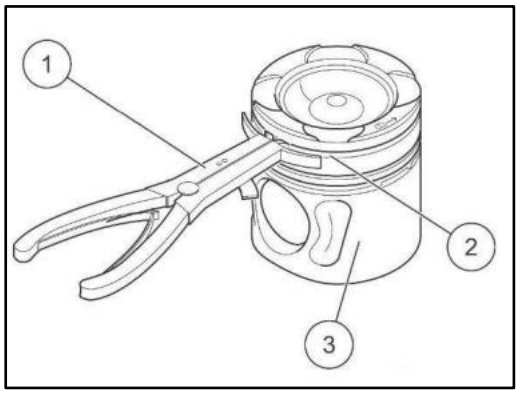

Installation steps

1. Use piston ring installation pliers ① to remove the piston ring ② from the piston ③, take out the second and third rings in turn, and clean the piston ring groove.

Remove the piston ring

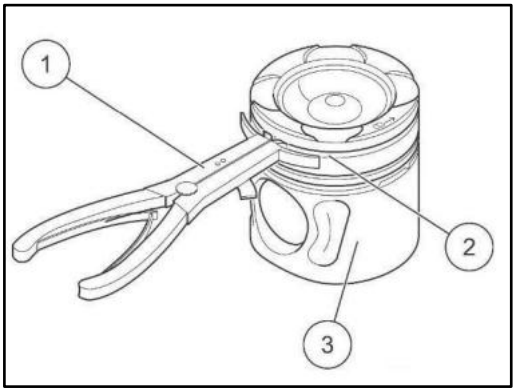

Removal steps

1. Use the piston ring mounting pliers ① to install the piston ring ② into the corresponding piston ring groove of the piston ③, ensuring that the TOP mark of the piston ring faces the top of the piston.

Note: The piston ring is a disposable part.

Installation of piston pin

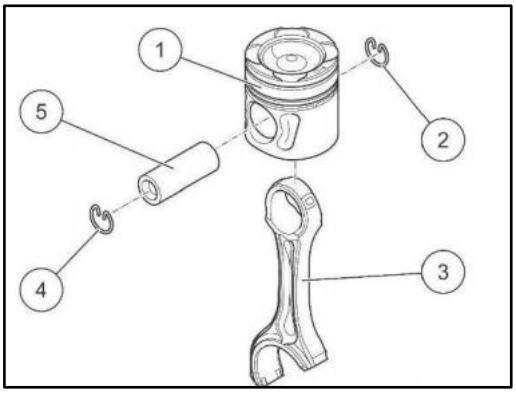

Installation steps

1. Install a new spring retainer ring ② in the piston groove, install the piston ① on the connecting rod ③, and apply lubricating oil to the piston pin ⑤.

2. Push the piston pin ⑤ through the piston ① and connecting rod ③ to ensure that it is pushed in place, and install a new spring collar ④ on the groove of the piston.

Auxiliary material: lubricating oil

Note: The spring collar is a disposable part.

Installing the carbon scraper ring



1. Install the carbon scraper ring ① into the cylinder liner ②.

Install the piston

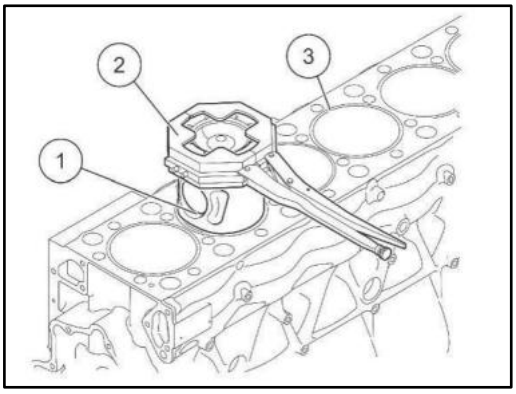

1. Rotate the crankshaft to TDC (top dead center), stagger the piston ring gaps by 120°, and ensure the oil ring spring detent is 180° apart from the ring gap. Ensure that the arrow on the piston faces the front of the engine, then rotate the piston counterclockwise by approximately 15°. Do not insert too deeply to avoid contact with the crankshaft and oil nozzles.

2. Apply lubricating oil to the connecting rod upper shell, install the connecting rod upper shell into the connecting rod, apply lubricating oil to the piston ① and cylinder liner ③, and install the piston pliers ② on the upper part of the piston ① and clamp it.

3. Push the piston ① into the cylinder liner ③ together with the connecting rod until the piston is pushed out of the piston caliper ②, push the piston ① until the connecting rod bearing is located on the crankshaft, repeat the above steps, and install the remaining piston connecting rod assemblies according to (1, 6)-(3, 4)-(2, 5).

Auxiliary material: lubricating oil

Install the connecting rod bearing cover



1. Before installing the connecting rod bearing cover, first check the last five digits ① of the bearing cover serial number with the connecting rod mark number ②, and then install it after confirming that the values are consistent.

Install the connecting rod bearing cover

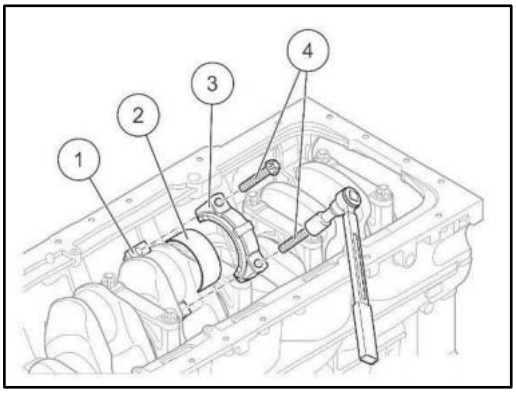

1. Apply lubricating oil to the connecting rod lower bearing shell ②, and install the connecting rod bearing cover ③ to the connecting rod ①.

2. Install the matching connecting rod bearing cover, screw the connecting rod bolt into 2-3 pitches and pre-tighten it. The screwing process shall be smooth without seizure. After pre-tightening, check that the expansion section is in good contact without gap and dislocation, and the pre-tightening torque is (10±1) Nm.

3. Use an E18 socket to tighten the connecting rod bolts ④ (2 pcs) to an initial torque of (100+10) N·m + (90+10)°, and a final tightening torque of (140-300) N·m. The axial clearance of the connecting rod is 0.130-0.330 mm.

Auxiliary material: lubricating oil

Note: The connecting rod bolts are disposable parts.

Detect the protrusion of the piston

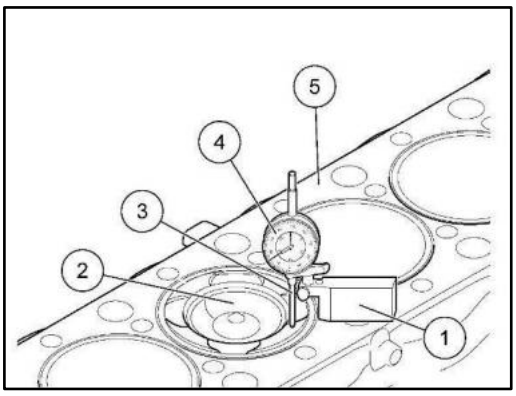

1. Attach the dial indicator ④ and its bracket ① to the piston ②, and read the difference on the indicator. The allowable piston protrusion is: MC11H uplift type (-0.045—+0.335) mm, MC13 uplift type (-0.049—+0.337) mm, MC13H uplift type (-0.055—+0.335) mm.

Remove the crankshaft thrust plate

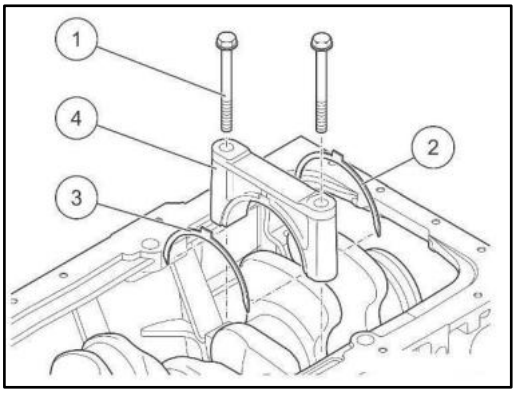

Removal steps

1. Mark the correct arrangement and mounting position of the bearing cover ①, take out the bolts ① (2 pcs) with a 27mm socket, and remove the thrust plates ②, ③ and the bearing cover ①.

Remove the crankshaft bearing cover

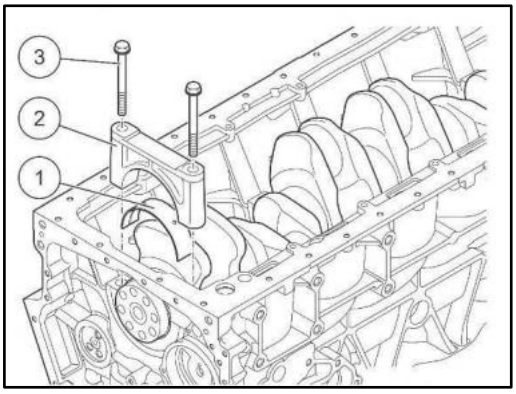

1. Mark the mounting position of the bearing cover ②, take out the bolts ③ (2 pcs) with a 27mm socket, take out the bearing cover ② and remove other bearing covers by repeating the above actions.

Remove the crankshaft

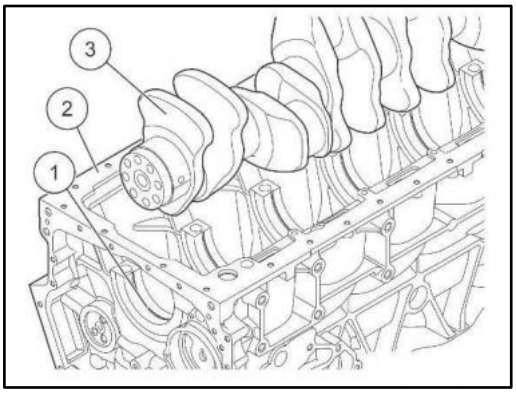

1. Lift the crankshaft ③ out of the crankcase ② with a sling, mark the mounting position and correct arrangement of the crankshaft bearing ①, and then remove it from the crankcase ②.

Remove the upper thrust plate

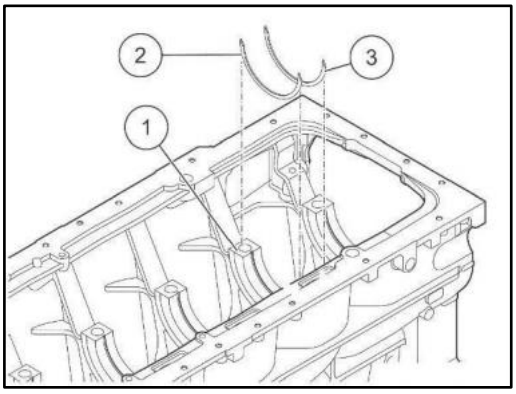

1. Remove the thrust plate ② and ③ from the sixth pad seat ①.

Installation of the crankshaft

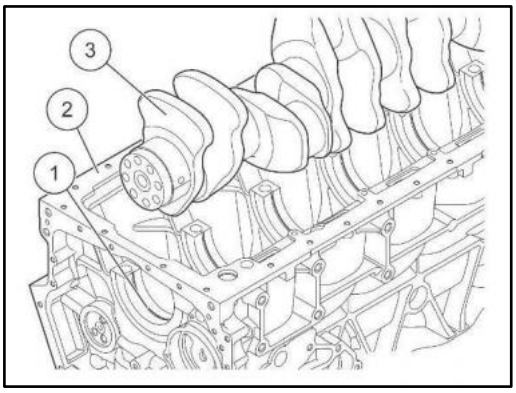

Installation steps

1. Install the crankshaft bearing ① into the bearing shell seat, adjust the alignment, apply lubricating oil to the bearing shell ①, repeat the above actions for other shells, and install the crankshaft ③ into the crankcase ② with the QR code end facing the rear end.

Auxiliary material: lubricating oil

Installation of the upper thrust plate

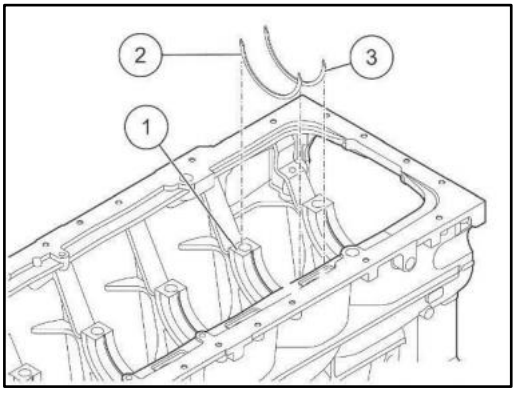

1. Apply lubricating oil to the thrust plates ② and ③, and install them into the sixth bearing seat with the oil groove facing the crankshaft ①.

Auxiliary material: lubricating oil

Installation of bearing cover thrust plate

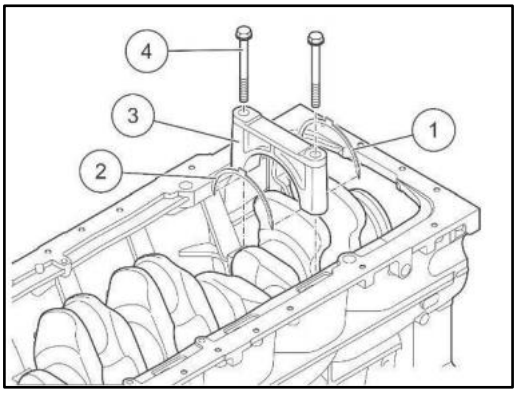

1. Apply lubricating oil to the crankshaft bearing and thrust plate ① and ②, install the crankshaft bearing into the bearing cover ③, make the oil groove face the crankshaft and adjust the alignment.

Auxiliary material: lubricating oil

Installation of bearing cover

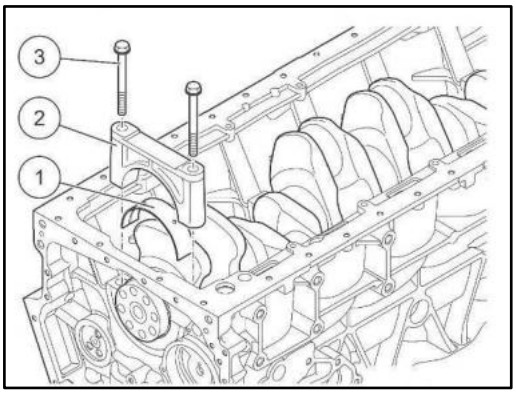

1. Install the crankshaft bearing ① into the bearing cover ② and adjust the alignment. Repeat the above actions for other bearing shells.

2. Apply lubricating oil to the joint surface of bolt ③ (2 pcs).

3. Use a 27mm socket wrench to pre-tighten the bolts ③ (2 pcs) to (10±1) Nm.

4. Tightening method: (50±5) Nm+ (150±15) Nm+(300+30) Nm+(90+10)°, final tightening torque: (350~595) Nm.

5. The crankshaft slewing torque is (0~20) Nm, and the axial clearance is (0.200~0.401) mm.

Auxiliary material: lubricating oil

Note: There is no dislocation between the bearing cover and the expansion section of the cylinder block, and the bolts are disposable parts.

Remove the crankshaft front gear

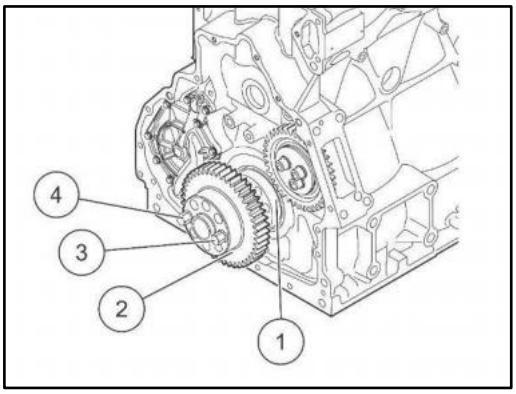

Removal steps

1. Manually gently take out the crankshaft front gear ② and clean the joint surface.

Remove the front intermediate gear

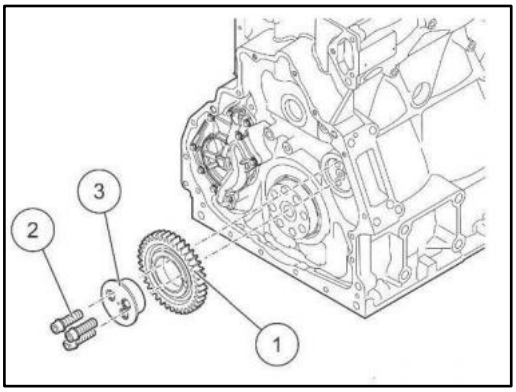

1. Remove the M12*50-10.9 hexagon socket head bolts ② (3 pcs) with an H10 hexagon socket, and take out the gear ①.

Install the front intermediate gear

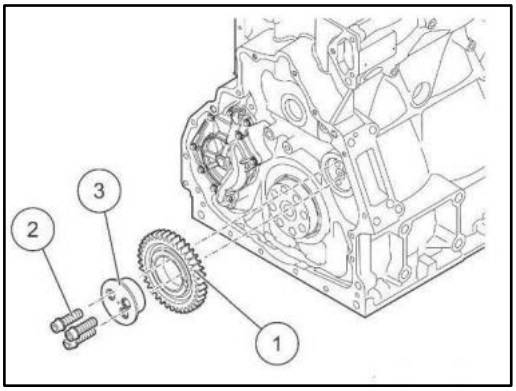

Installation steps

1. Install the intermediate gear shaft ③ into the intermediate gear ①, and install the intermediate gear on the crankcase with the convex side facing the crankcase.

2. Loosely install the M12*50-10.9 hexagon socket head bolts ② (3 pcs) with an H10 hexagon socket.

Install the crankshaft front gear

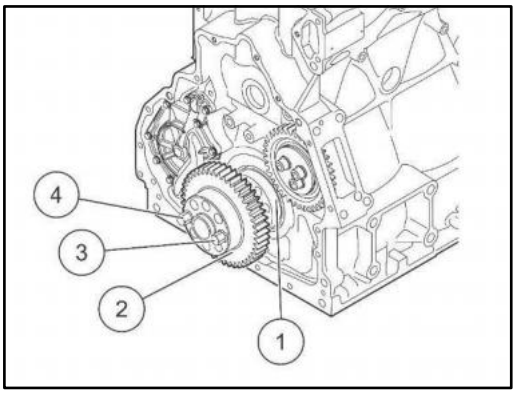

1. Manually install the crankshaft front gear ② to the bottom of the crankshaft ①. When a clear sound is heard, install it in place, and the rotating gear is free from seizure.

2. The backlash between the crankshaft front gear and the outer rotor is (0.092-0.272) mm.

Tighten the front intermediate gear

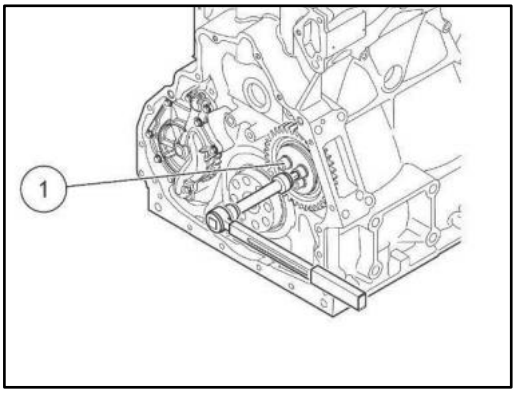

1. Tightening torque of front intermediate gear shaft: (110±11) Nm.

2. The axial clearance of the front intermediate gear is (0.100~0.340) mm.

3. The clearance between crankshaft front gear and intermediate gear is (0.057~0.183) mm.

Air compressor



1. Air compressor 2. Air compressor intake pipe 3. Air compressor water inlet pipe 4. Air compressor water return pipe 5. Resonance pipe

Remove the air compressor intake pipe

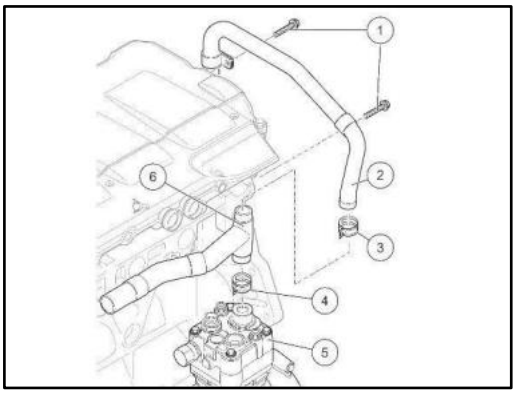

Removal steps

1. Remove the clamp ③ with clamp pliers.

2. Use a 13mm socket wrench to remove the M8*40-10.9 hexagon flange bolt (1 piece) and M8*70-10.9 hexagon flange bolt (1 piece) ①, and take out the intake pipe ②.

3. Remove the clamp ④ with clamp pliers, and take out the resonance tube ⑥.

Removal of the air compressor

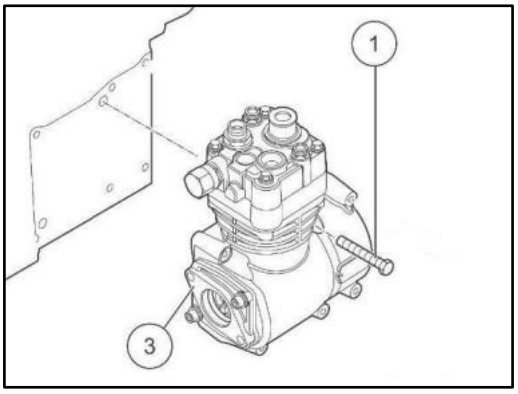

1. Use a 13mm socket wrench to remove ① M8*110-10.9 hexagon flange bolts (4 pcs) and M8*40-10.9 hexagon flange bolt (2 pcs), take out the air compressor ③, and clean the joint surface.

Installation of air compressor

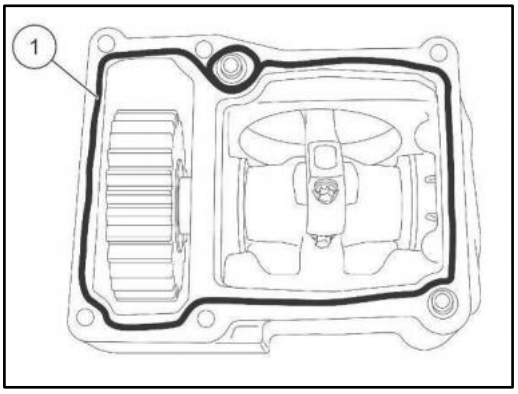

Installation steps

1. Apply Loctite 5900 sealant to the air compressor joint surface.

Auxiliary material: Loctite 5900

Installation of air compressor

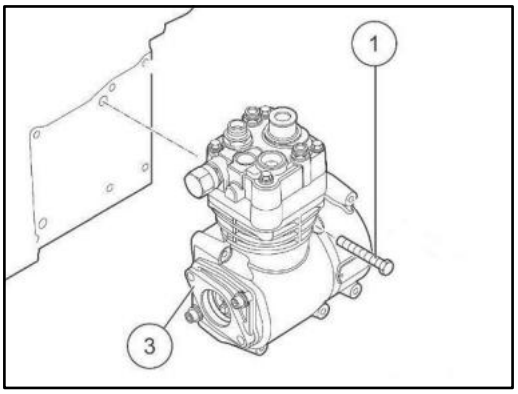

Installation steps

1. Position the air compressor ③, and use a 13mm socket wrench to tighten the M8*110-10.9 hexagon flange bolts (4 pcs) and M8*40-10.9 hexagon flange bolts (2 pcs) of ① to (35±3)Nm.

Auxiliary material: Loctite 5900

Install the air compressor intake pipe

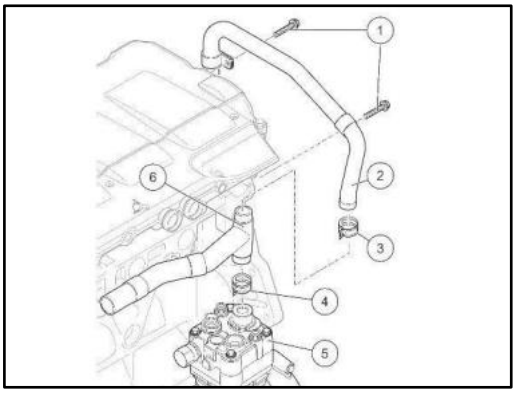

1. Install the resonance tube ⑥ to the air inlet of the air compressor and fix it with clamp ①.

2. Install the air compressor intake pipe ② to the air inlet of the resonance tube ⑥, and fix it with clamp ③.

3. Fix the air compressor intake pipe, and use a 13mm socket wrench to tighten ① M8*40-10.9 hexagon flange bolt (1 piece) and M8*70-10.9 hexagon flange bolt (1 piece) to (30±3)Nm.

Exhaust manifold

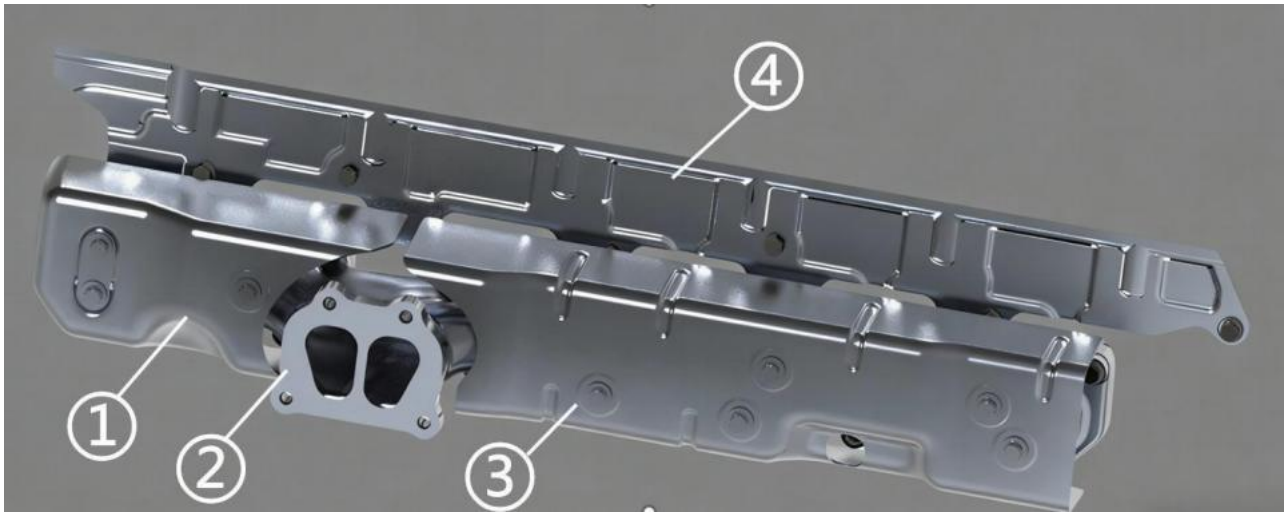

1. Rear heat shield 2. Exhaust pipe 3. Front heat shield 4. Intermediate heat shield

Removal of heat shields

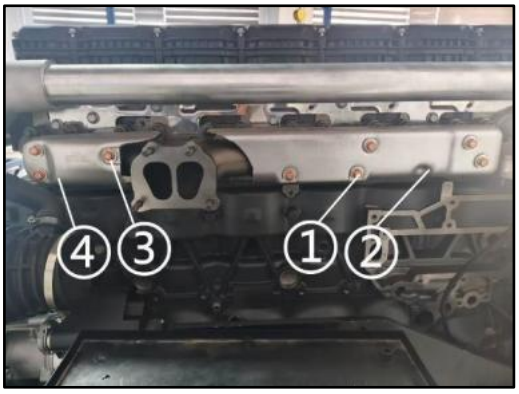

Removal steps

1. Use a 13mm socket wrench to remove five M8×15 hexagon flange bolts ① and three M8×15 hexagon flange bolts ③, and take out the heat shields ② and ④.

Remove the exhaust manifold

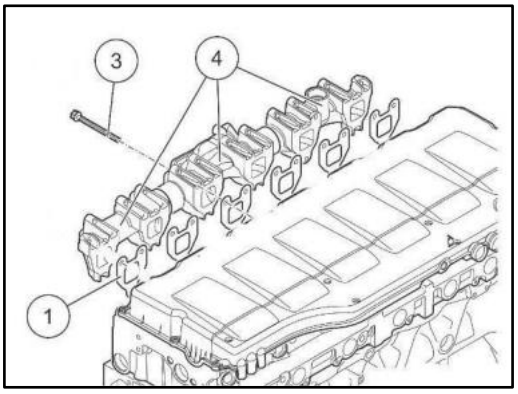

1. Use an E14 socket wrench to remove eighteen heat-resistant bolts ③, and take out the exhaust manifold ① and gasket ①.

Install the exhaust manifold

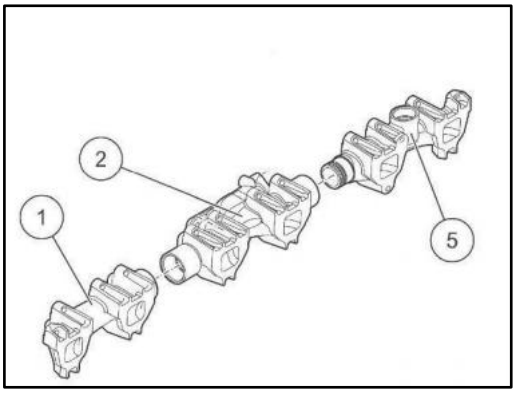

Installation steps

1. Sleeve the exhaust pipe sealing ring on the front exhaust manifold ① and the rear exhaust manifold ⑤ respectively, and install 2 gaskets in each groove, with the openings staggered and arranged at 180°.

2. Install the front exhaust manifold ① and rear exhaust manifold ⑤ to the middle exhaust manifold ②.

Note: The gasket is a disposable part.

Install the exhaust manifold

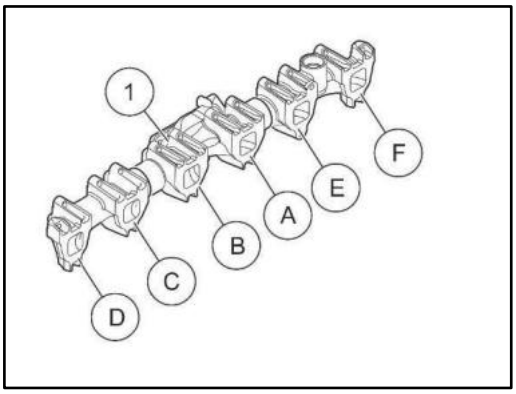

1. Starting from A, tighten the exhaust manifold in the order of A, B, C, D, E and F.

Install the exhaust manifold

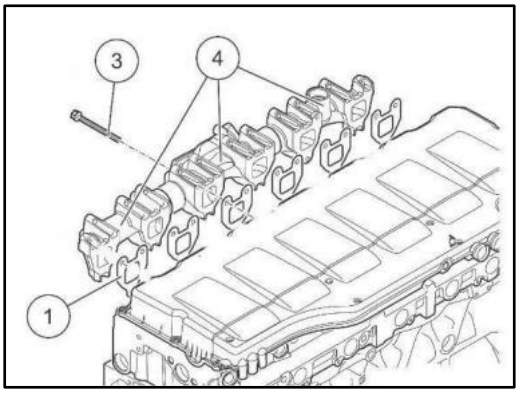

1. Ensure the protruding part of the gasket ① faces the exhaust manifold, and use an E14 socket wrench to tighten eighteen heat-resistant bolts ③ to an initial torque of (60+5) N·m + (90+10)°, and a final torque of (62–115) N·m.

Note: Bolts are disposable parts.

Installation of the heat shields

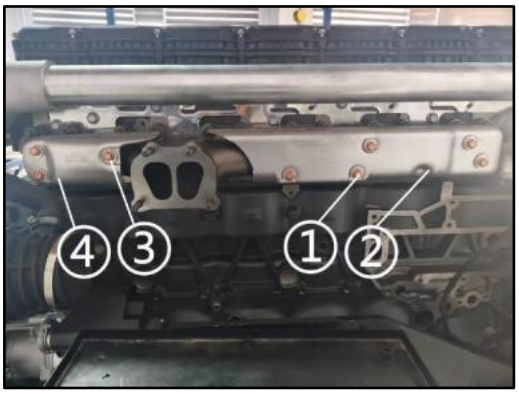

1. Install the heat shields ② and ④ into position, and use a 13mm socket wrench to tighten five M8×15 hexagon flange bolts ① and three M8×15 hexagon flange bolts ③ to a tightening torque of 30 N·m.

Turbocharger

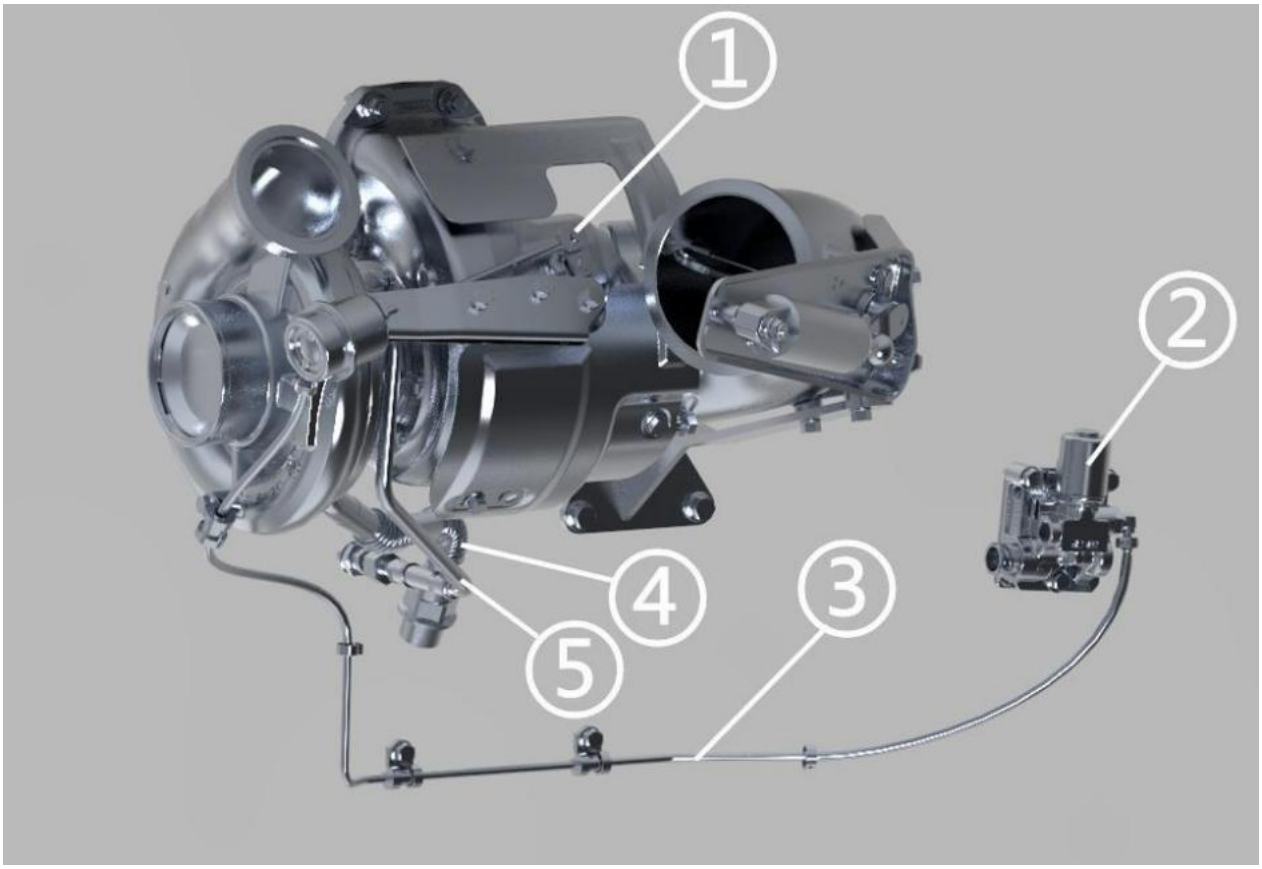

1. Turbocharger 2. Proportional valve 3. Proportional valve pipe 4. Oil return pipe 5. Oil inlet pipe

Remove the proportional valve

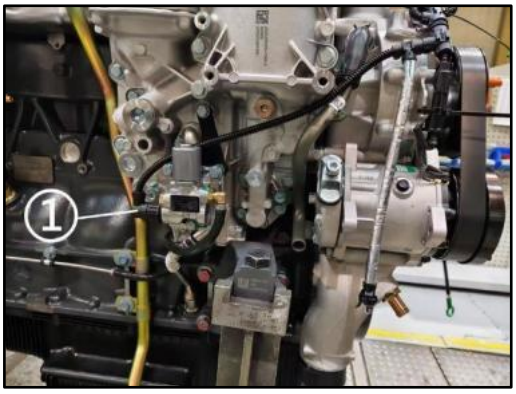

Removal steps

1. Unplug the harness plug ①.

Remove the proportional valve

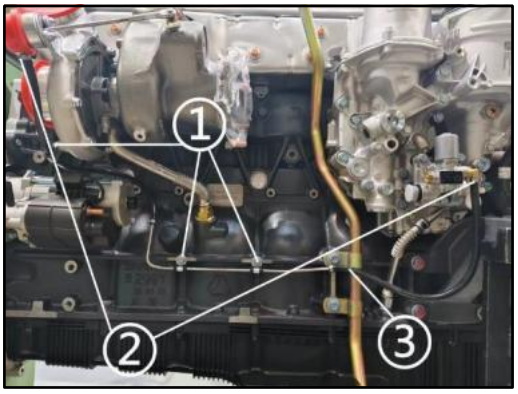

1. Remove the M8 hexagon flange bolts ① (3 pcs) with a 13mm socket wrench.
2. Use clamp pliers to remove two clamps ②, and take out the air pipe ③.

Remove the proportional valve

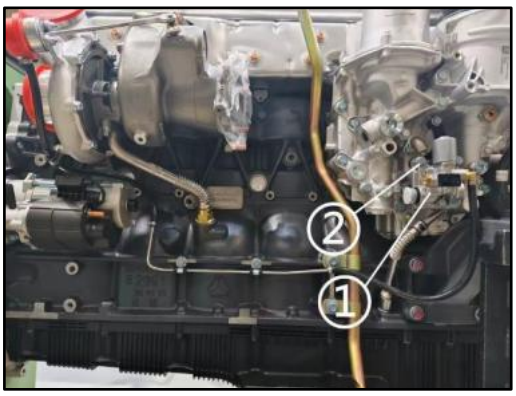

1. Use a 13mm socket wrench to remove three M8 hexagon flange bolts ②, and take out the proportional valve ②.

Remove the exhaust elbow

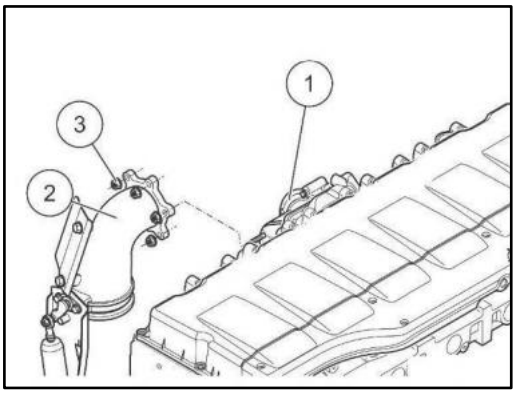

Removal steps

1. Remove the nuts ③ (6 pcs) with a 15mm shaped open-end wrench, take out the exhaust elbow ②, and clean the joint surface.

Remove the oil inlet pipe

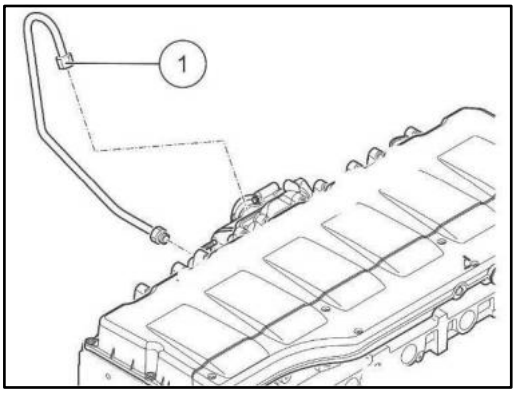

1. Remove the oil pipe ①, use a 19mm open-end wrench to remove the turbocharger end, and use a 22mm special-shaped wrench to remove the cylinder block end.

Remove the oil return pipe

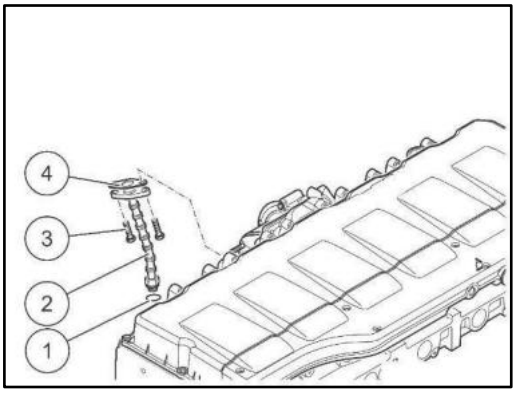

1. Use a 13mm socket wrench to remove the M8*20-10.9 hexagon flange bolts ③ (2 pcs), take out the gasket ④ and return pipe ②, and clean the joint surface.

Remove the turbocharger

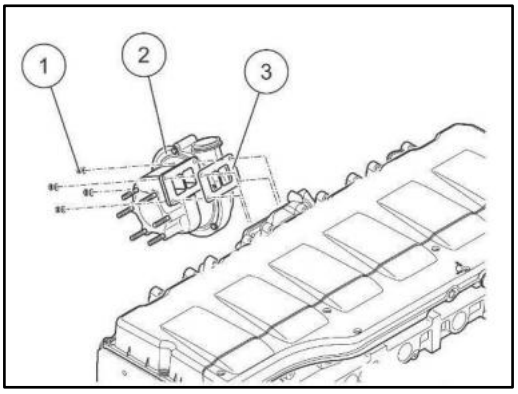

1. Remove the nuts ① (4 pcs) with a 15mm ring wrench, take out the turbocharger ② and gasket ③, and clean the joint surface.

Installation of turbocharger

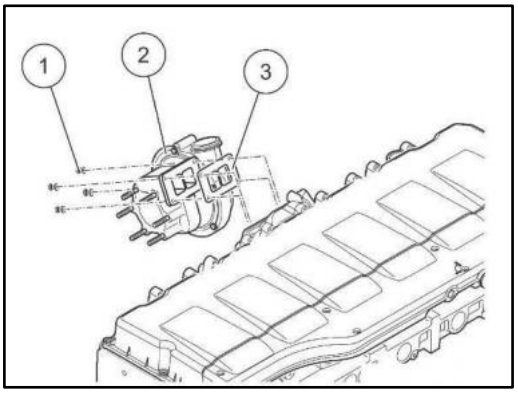

Installation steps

1. Install the turbocharger ② to the exhaust pipe, with the convex side of the gasket ③ facing the exhaust pipe.

2. Use a 15mm ring wrench to tighten the nuts ① (4 pcs) to (10+5)Nm+(90+10).

Note: The gasket is a disposable part, and the turbocharger fastening nut is a disposable part.

Install the oil return pipe

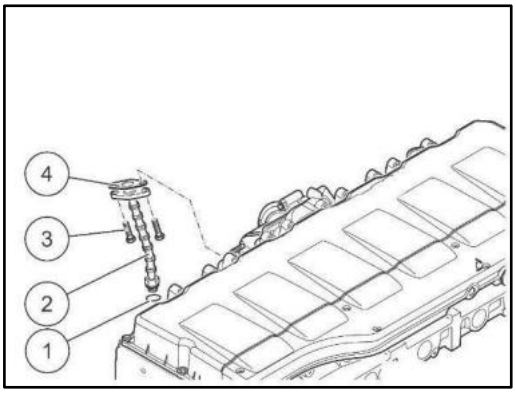

1. Install the oil return pipe ② and gasket ④ to the crankcase together.

2. Use a 13mm socket wrench to tighten the M8*20-10.9 hexagon flange bolts ③ (2 pcs) to (35±3) Nm.

Note: The gasket is a disposable part.

Install the oil inlet pipe

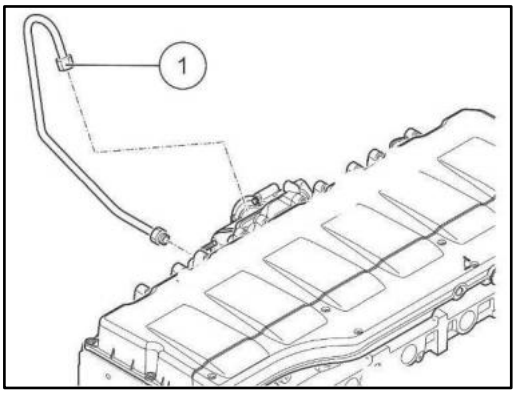

1. Tighten the turbocharger oil inlet pipe ①, tighten the turbocharger end with a 19mm open-end wrench, and tighten the cylinder block end with a 22mm special-shaped wrench to (20±2)Nm+(90±5)°.

Note: The oil inlet pipe is a disposable part.

Install the exhaust elbow

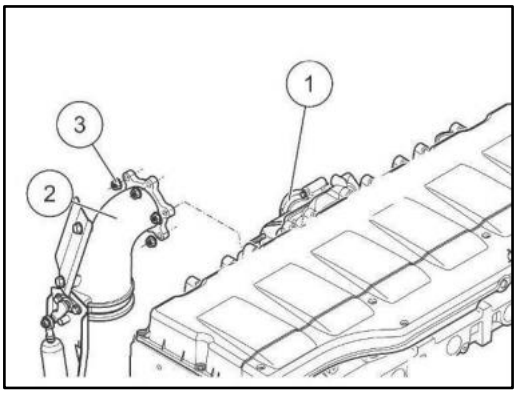

1. Use a 15mm shaped open-end wrench to tighten the nuts ③ (6 pcs) to (65Nm±6)Nm.

Note: The nut is a disposable part.

Install the proportional valve

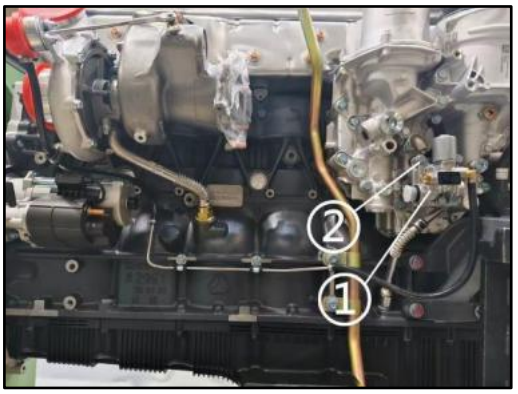

1. Install the proportional valve ① to the oil module, and use a 13mm socket wrench to tighten three M8 hexagon flange bolts ② to a tightening torque of (35±3) N·m.

Install the proportional valve

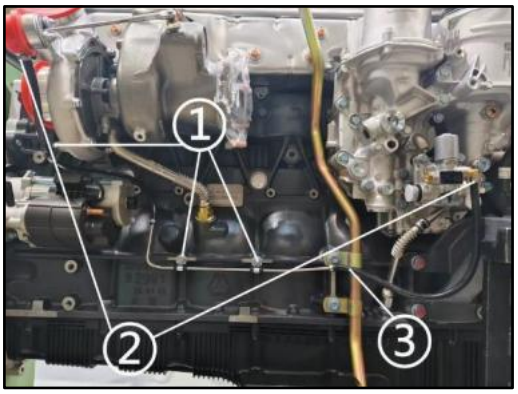

1. Connect the left end of the air pipe ③ to the turbocharger bypass valve and the right end to the metering unit, and use clamp pliers to secure the two clamps ②.
2. Use a 13mm socket wrench to tighten the M8 hexagon flange bolt ① (3 piece) to (35±3) Nm.

Install the proportional valve

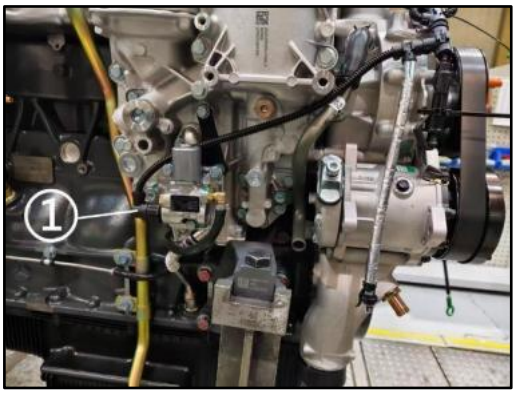

1. Connect the harness plug ①.

Lubrication system

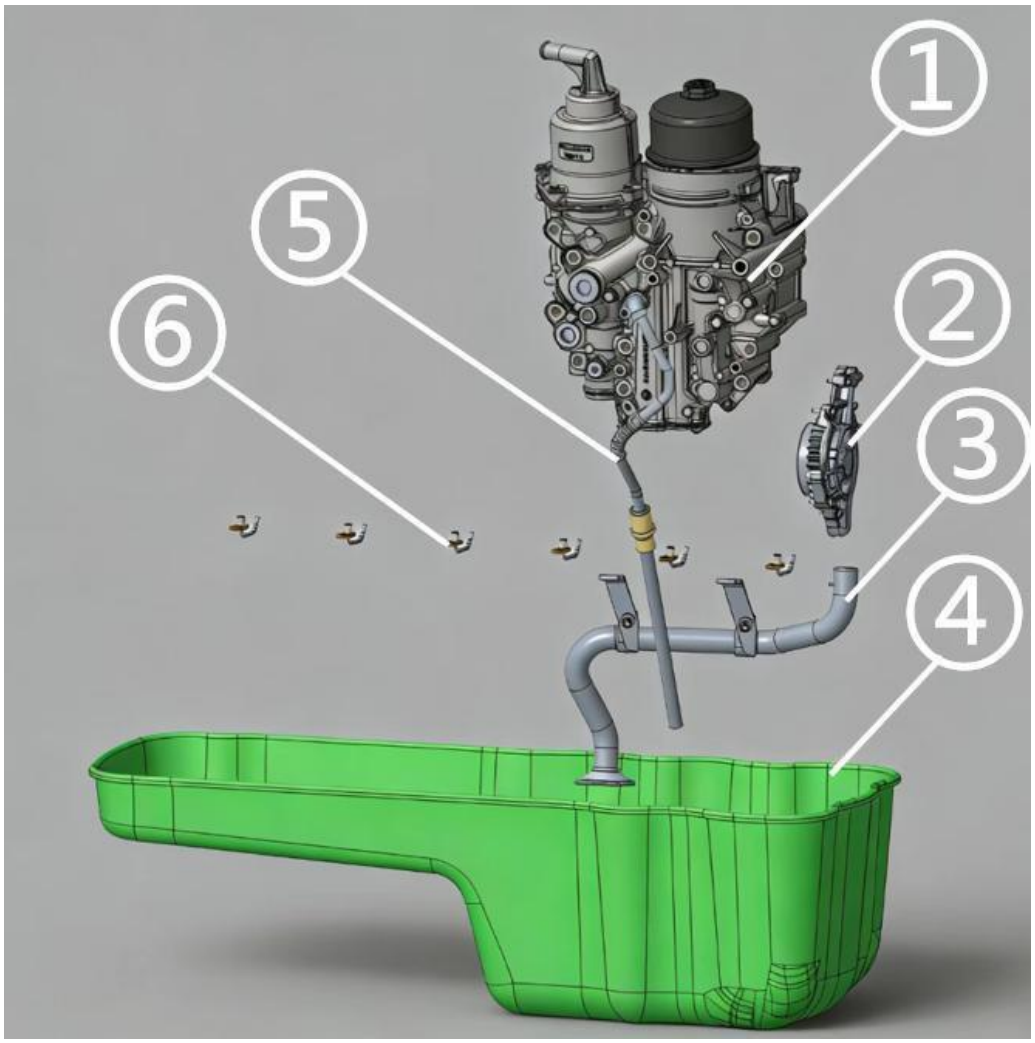

1. Oil module 2. Oil pump 3. Oil suction pipe 4. Oil pan nozzle 5. Oil-gas separator oil return pipe 6. Oil

Remove the proportional valve

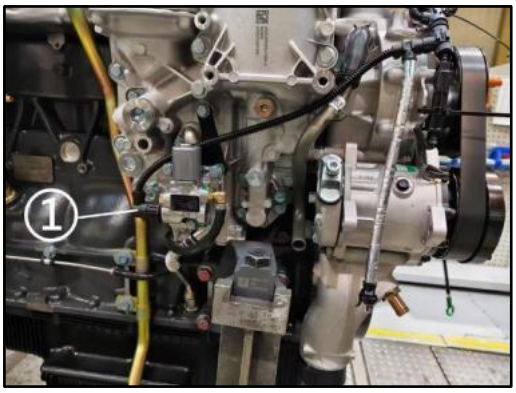

Removal steps

1. Unplug the harness plug ①.

Remove the proportional valve

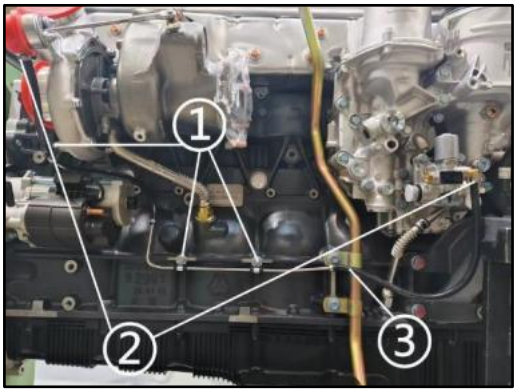

1. Remove the M8 hexagon flange bolts ① (3 pcs) with a 13mm socket wrench.
2. Use clamp pliers to remove two clamps ②, and take out the air pipe ③.

Remove the proportional valve

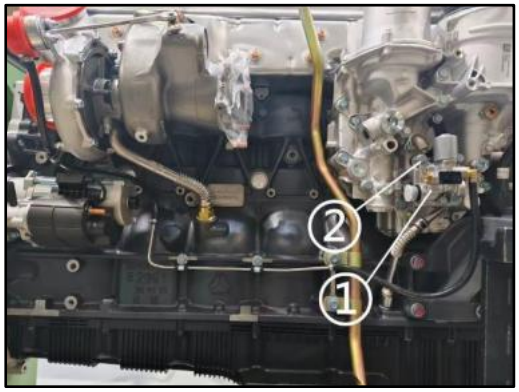

1. Use a 13mm socket wrench to remove three M8 hexagon flange bolts ②, and take out the proportional valve ①.

Remove the oil module

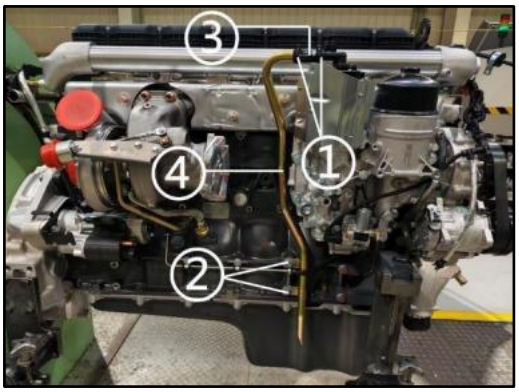

1. Remove the clamp ① (2 pcs) with clamp pliers, remove the M12*25-10.9 hexagon flange bolts ② (2 pcs), and take out the oil-gas separator air outlet pipe ① and hose ③ with a 15mm socket wrench.

Remove the oil module

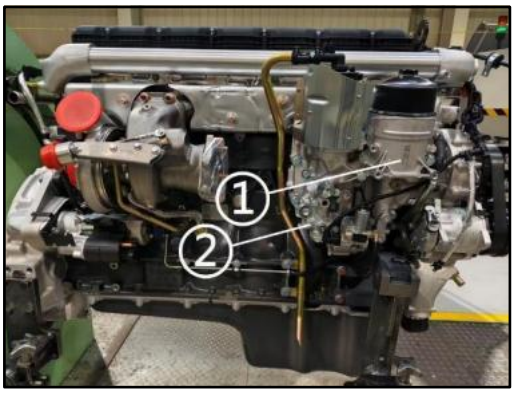

1. Use a 15mm socket wrench to remove fifteen M8 hexagon flange bolts ②.

Remove the oil module

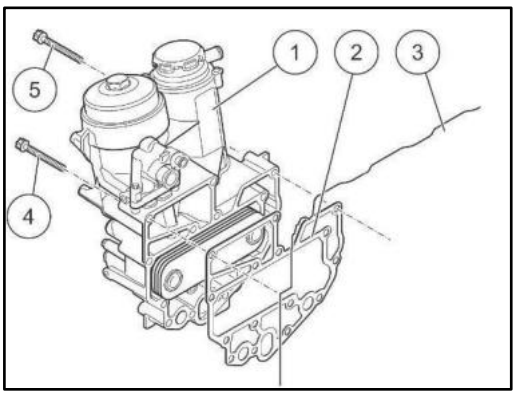

1. Take out the oil module ① and gasket ②.

Install the oil module

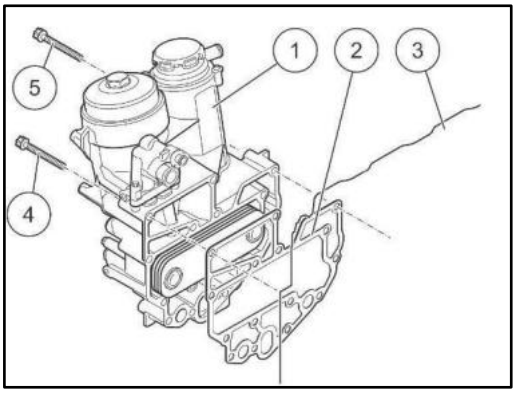

Installation steps

1. Fix the gasket ② to the oil module ①.

Note: The gasket is a disposable part.

Install the oil module

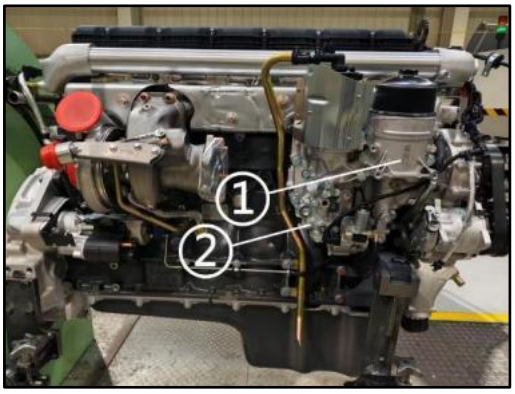

1. Install the oil module ① and gasket into position, and use a 15mm socket wrench to tighten fifteen M8 hexagon flange bolts ② to a tightening torque of (75±7) N·m.

Install the oil module

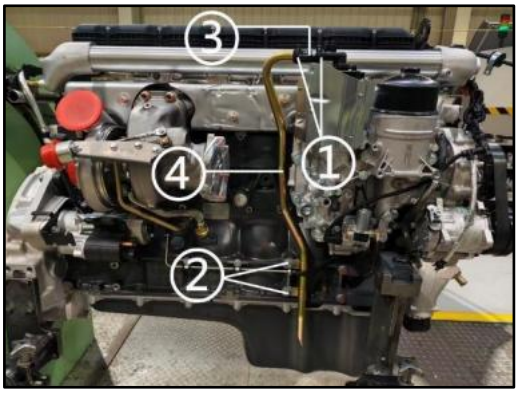

1. Push the hose ③ completely to the oil-gas separator pipe orifice, install the air outlet pipe ④ into the hose, and clamp the clamps ① (2 pcs) with clamp pliers.

2. Use a 15mm socket wrench to tighten the M12*25 hexagon flange bolt ② (2 piece) to (105±10) Nm.

Note: The installation directions of the two clamps are the same.

Install the proportional valve

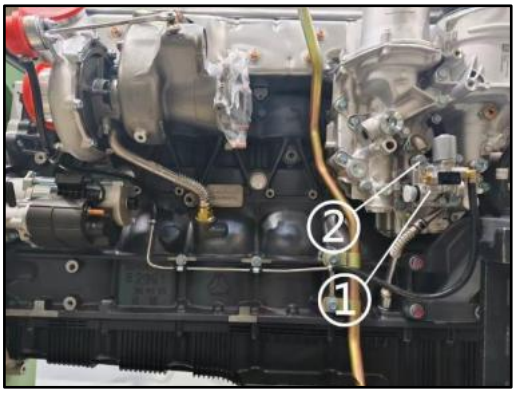

1. Install the proportional valve ① to the oil module, and use a 13mm socket wrench to tighten three M8 hexagon flange bolts ② to a tightening torque of (35±3) N·m.

Install the proportional valve

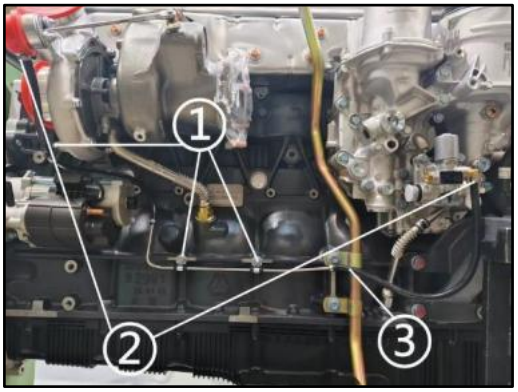

1. Connect the left end of the air pipe ③ to the turbocharger bypass valve and the right end to the metering unit, and use clamp pliers to secure the two clamps ②.

2. Use a 13mm socket wrench to tighten the M8 hexagon flange bolt ① (3 piece) to (35±3) Nm.

Install the proportional valve

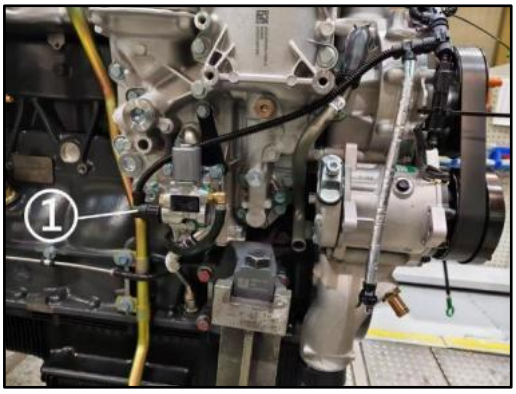

1. Connect the harness plug ①.

Removal of the oil pan

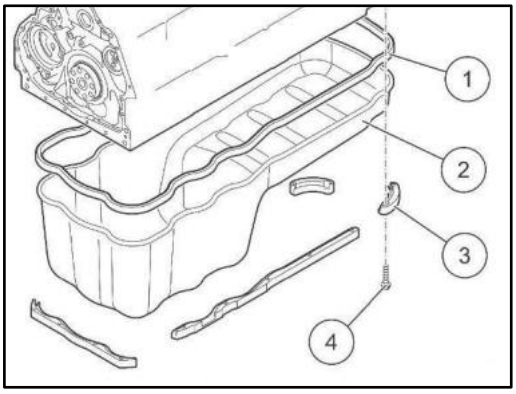

Removal steps

1. Use a 13mm socket wrench to remove the M8*50-10.9 hexagon flange bolts ① (18 pcs), and take out the oil pan ②, support block ③ and gasket ①.

Remove the oil suction pipe

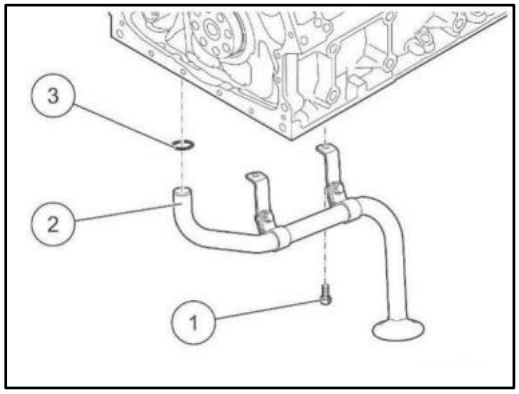

1. Use a 13mm socket wrench to remove the M8*16-10.9 hexagon flange bolts ① (2 pcs), and take out the oil pipe ② and O-ring ③.

Install the oil suction pipe

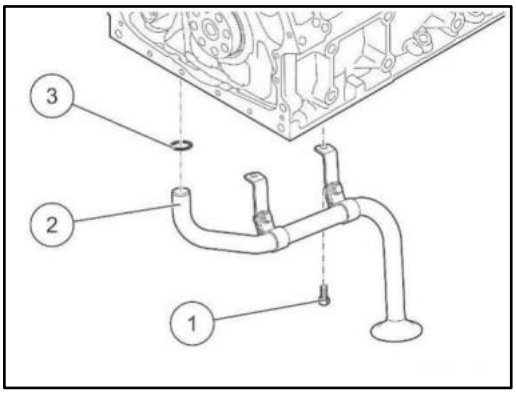

1. Apply an appropriate amount of Vaseline to the O-ring ③, and install the O-ring ③ to the crankcase.

2. Install the oil suction pipe ② to the crankcase, and use a 13mm socket wrench to tighten the M8*16-10.9 hexagon flange bolts ① (2 pcs) to (35±3) Nm.

Auxiliary material: Vaseline

Note: The O-ring is a disposable part.

Installation of the oil pan

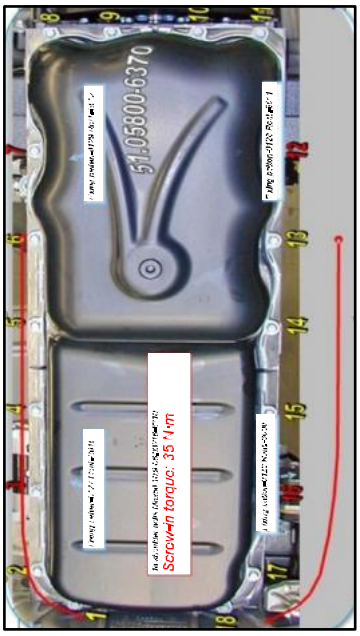

Installation steps

1. Tightening sequence of oil pan bolts: 16-12-7-3-6-5-4-2-1-13-14-15-17-18-8-9-11-10 and then re-tightening: 16- 12-7- 3.

Installation of the oil pan

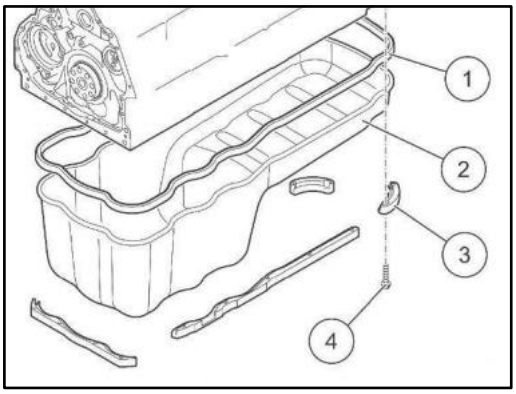

1. Install the oil pan gasket ① onto the oil pan ②, and position the oil pan ②.

2. Install the oil pan support block ③, and use a 13mm socket wrench to tighten the M8*50-10.9 hexagon flange bolts ④ (18 pcs) to (35±3) Nm.

Removal of the oil nozzle

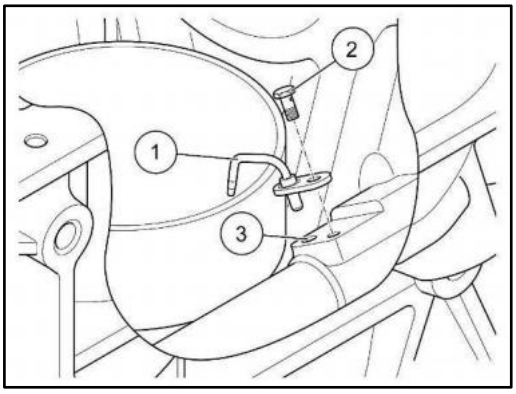

Removal steps

1. Use a 10mm socket wrench to remove the M6*12-10.9 hexagon flange bolt ② (1 piece), and take out the oil nozzle ①.

Installation of the oil nozzle

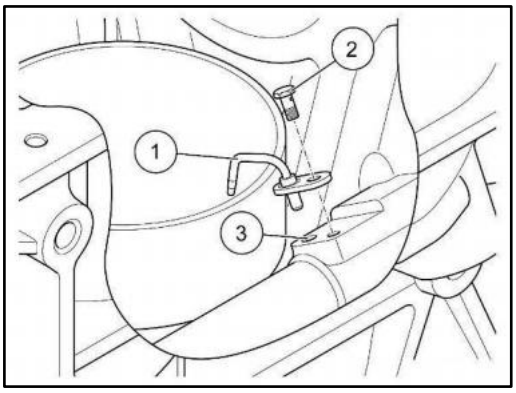

Installation steps

1. Install the oil nozzle ① onto the crankcase ③, and use a 10mm socket wrench to tighten the M6*12-10.9 hexagon flange bolt ② (1 piece) to (15±1) Nm.

Remove the crankshaft front gear

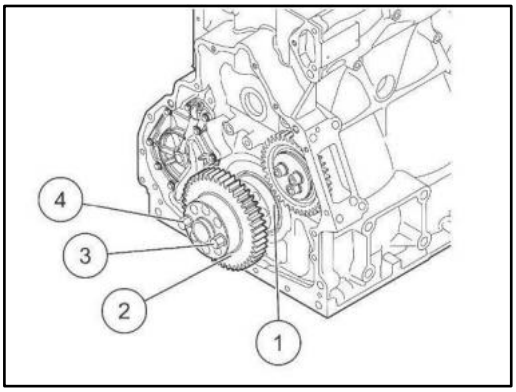

Removal steps

1. Gently take out the crankshaft front gear ② from the outer surface of crankshaft ① and clean the mating surface.

Remove the oil pump cover

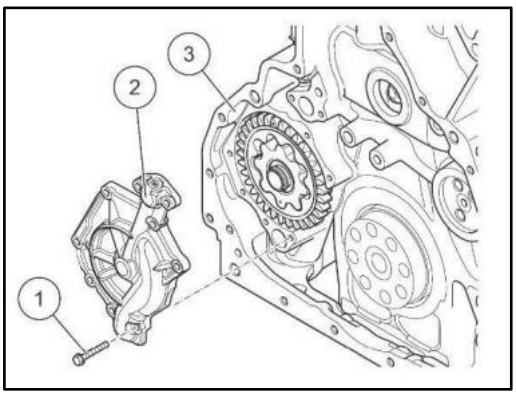

1. Use a 10mm socket wrench to remove the M6*20-10.9 hexagon flange bolts ① (9 pcs), and take out the oil pump cover ②.

Removal of the oil pump

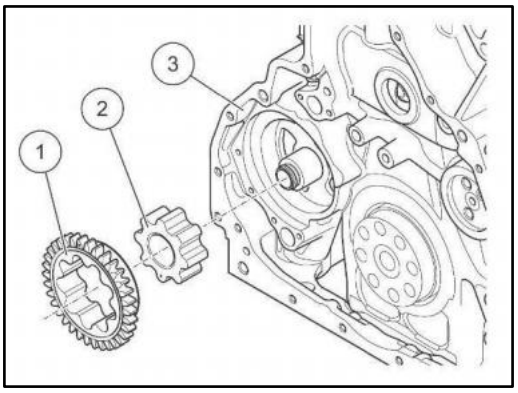

1. Remove the outer rotor ① and inner rotor ② from the crankcase ③.

Remove the inner rotor shaft

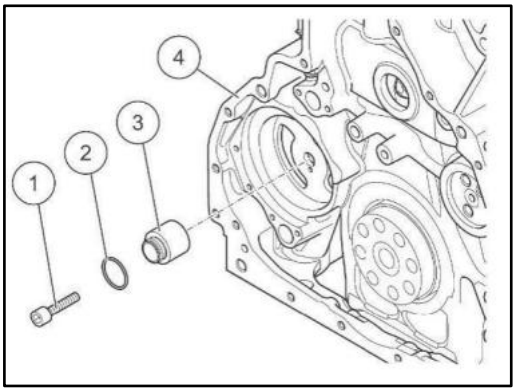

1. Remove the M10*35-10.9 hexagon socket head cap screw ① (1 piece) with an H8 hexagon socket, and take out the O-ring ② and inner rotor shaft ③.

Install the inner rotor shaft

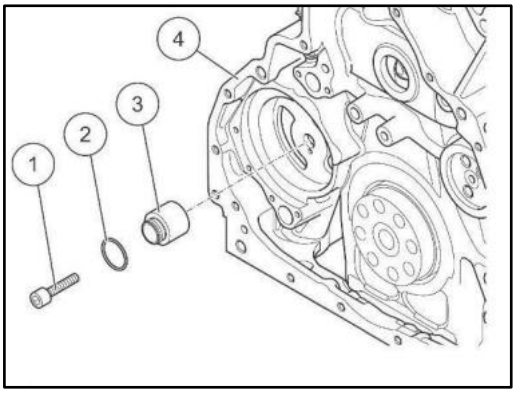

1. Apply a layer of Vaseline to the O-ring ②, and install the O-ring ① on the rotor shaft ③.

2. Install the rotor shaft ③ to the crankcase ④, and tighten the M10*35-10.9 hexagon socket head cap screw ① (1 piece) with an H8 hexagon socket.

3. Tightening torque: (25+5)Nm+(90+10)°, final tightening torque: (70~110)Nm.

Auxiliary material: Vaseline

Note: The O-ring and hexagon socket head cap screw are disposable parts.

Installation of the oil pump

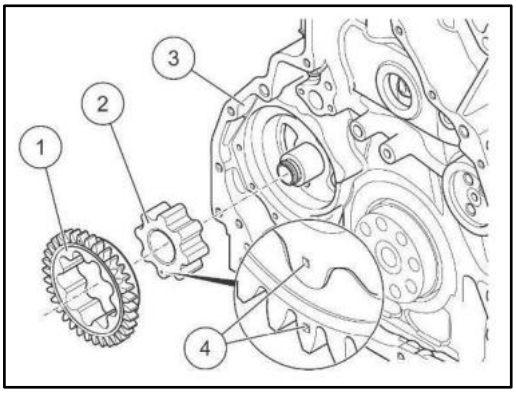

1. Apply an appropriate amount of lubricating oil to the inner surface of outer rotor ①, inner rotor ②, bushing and outer surface of inner rotor shaft.

2. Install the outer rotor ① and inner rotor ② onto the inner rotor shaft in turn, rotate the outer rotor manually without seizure, and the inner rotor mark ④ faces outward.

Auxiliary material: lubricating oil

Install the oil pump cover

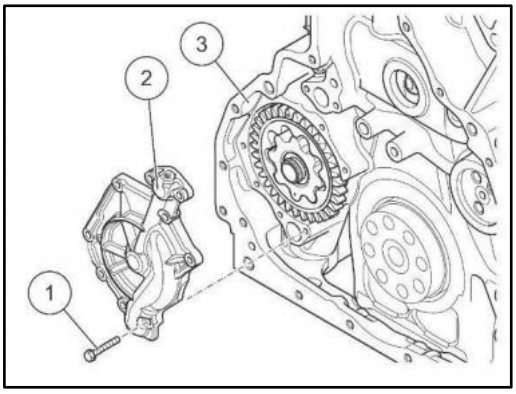

1. Position the oil pump cover ② on the crankcase ③.

2. Use a 10mm socket wrench to tighten the M6*20-10.9 hexagon flange bolts ① (9 pcs) to (15±1) Nm.

3. The axial clearance is 0.030-0.093 mm.

4. The radial clearance is 0.100-0.210 mm.

Note: Use 8 bolts (M6*25-10.9) with a tightening torque of (15±1) Nm for models with increased engine oil.

Install the crankshaft front gear

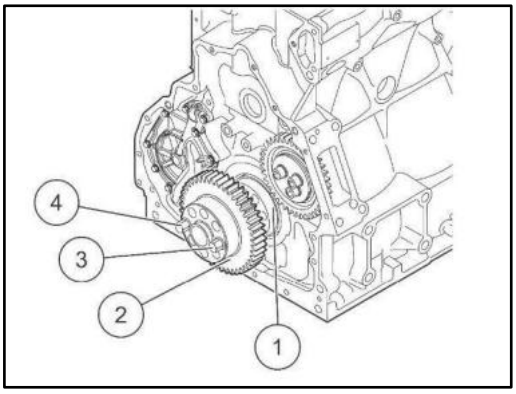

1. Install the crankshaft front gear ② on the outer surface of the crankshaft ①, ensuring that it reaches the bottom. When a clear sound is heard, install it in place, and the rotating gear is not stuck.
2. The backlash between the crankshaft front gear and the outer rotor is 0.092-0.272 mm.

Cooling system

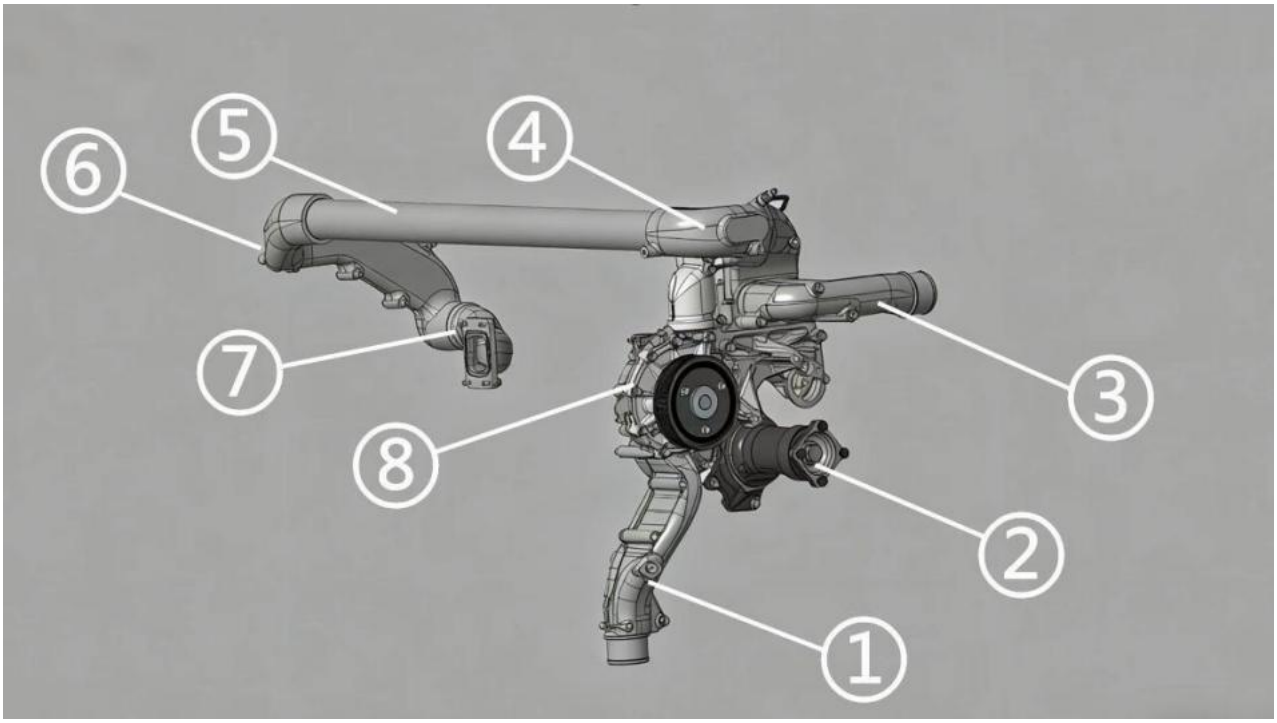

1. Distribution housing 2. Fan bracket 3. Water outlet pipe 4. Thermostat housing 5. Water pipe 6. Coolant elbow 1 7. Coolant elbow 2 8. Water pump

Removing the fan tray

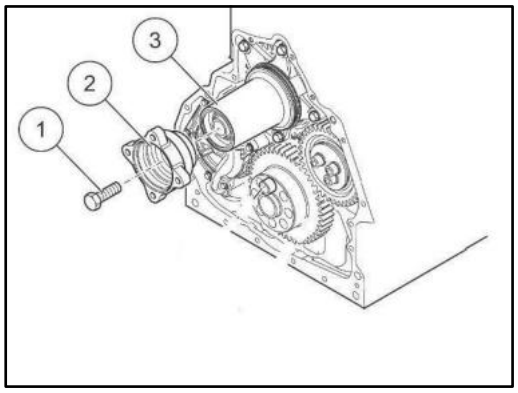

Removal steps

1. Remove the M18*85-10.9 hexagon flange bolt ① (1 piece) (201-06600-6118 Fan Bracket) with a 27mm socket wrench.

2. Use a 27mm socket wrench to remove the M18*85-10.9 hexagon flange bolt ① (1 piece) (202-06600-6126 Fan Bracket).

3. Remove the M20*90-10.9 hexagon flange bolt ① (1 piece) (201-06600-6129 fan bracket) with a 30mm socket wrench.

4. Take out the fan bracket hub ②.

Note: This bolt is disassembled and assembled as a reverse thread.

Removing the fan tray

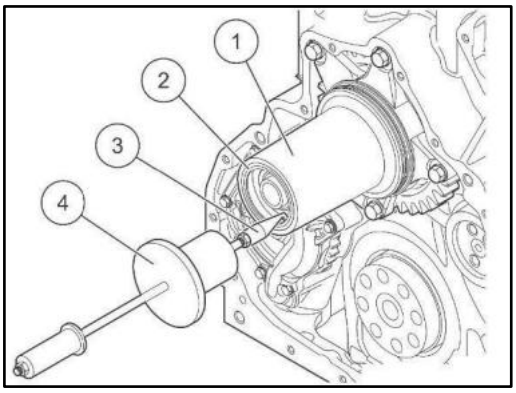

1. Pull out the oil seal ② from the fan bracket ① with the impact puller ④ and the pull hook ③.

Removing the fan tray

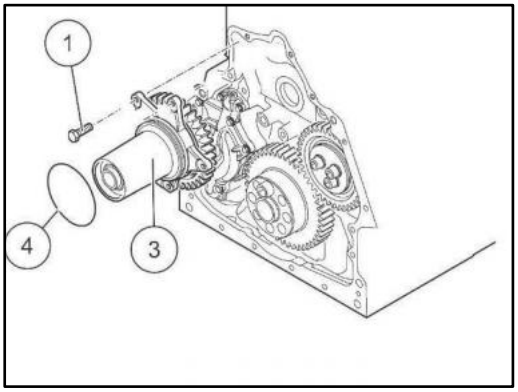

1. Use a 13mm socket wrench to remove ① M8*25-10.9 hexagon flange bolt (4 pcs) and M8*40-10.9 Hexagon flange bolt (1 pc), and take out the O-ring ④ and fan bracket ③.

Installing the fan tray

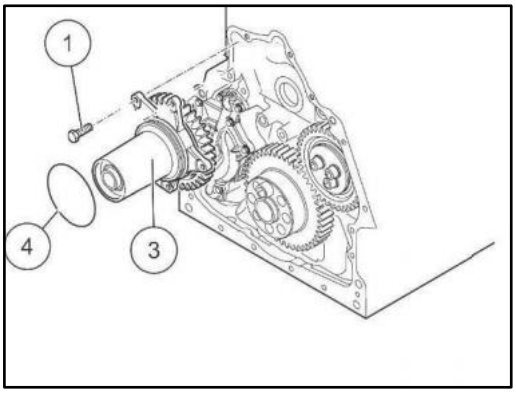

Installation steps

1. Install the fan bracket to the specified position and apply a layer of Vaseline to the O-ring ①.

2. Use a 13mm socket wrench to tighten ① M8*25-10.9 hexagon flange bolt (4 pcs) and M8*40-10.9 (1 piece) to (35±3)Nm.

The axial clearance shall be (0.20~0.55) mm.

The radial clearance is (0.035~0.076) mm.

Auxiliary material: Vaseline

Note: The O-ring is a disposable part.

Installing the fan tray

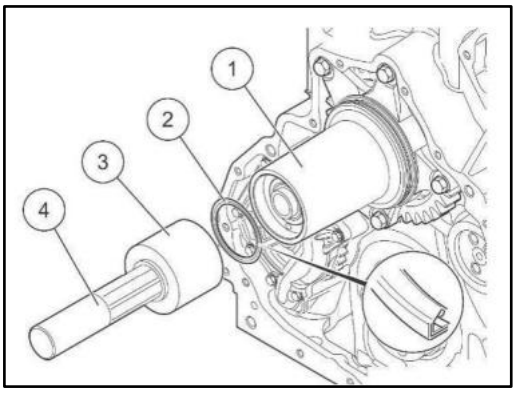

1. Press the oil seal ② into the fan bracket ① with the set handle ④ and press-in punch ③ until it reaches the stopper position.

Installing the fan tray

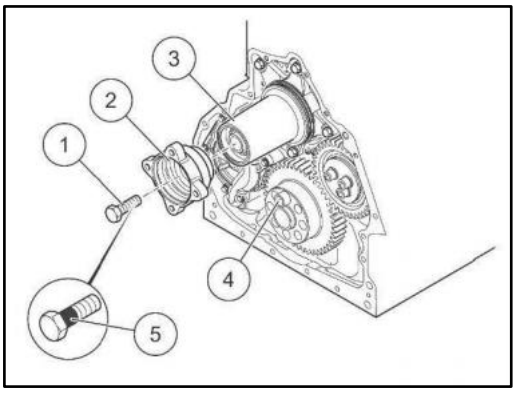

1. Install the fan hub ② into the fan bracket ③, and apply Loctite 5900 to the joint surface of the bolt ⑤.

2. Use a 27mm socket wrench to tighten the M18*85-10.9 hexagon flange bolt ① (1 piece) (Figure No.: 201-06600-6118). The tightening torque of the fan bracket is (250±10) Nm+(90±10)°, and the final tightening torque is (300~470) Nm.

3. Use a 27mm socket wrench to tighten the M18*85-10.9 hexagon flange bolt ① (1) (Figure No.: 202-06600-6126). The tightening torque of the fan bracket is (200±10) Nm+(135±10)°, and the final tightening torque is (420~550) Nm.

4. Use a 30mm socket wrench to tighten the M20*90-10.9 hexagon flange bolt ① (1 piece), drawing No.: 201-06600-6129. The tightening torque of the fan bracket is (250±10) Nm+(120+10)°, and the final tightening torque is (350~550) Nm.

Auxiliary material: Loctite 5900

Note: The removal and installation of this bolt is a reverse thread, and the bolt is a disposable part.

Remove the crankshaft rotating device

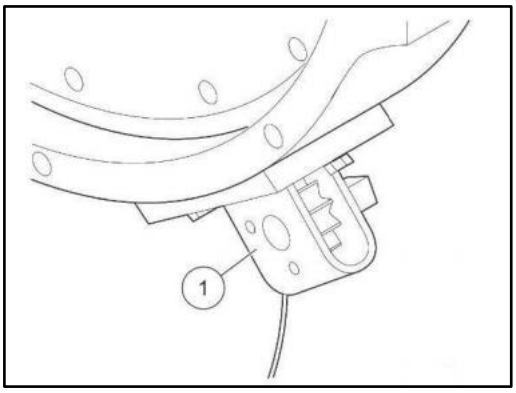

Removal steps

1. Take out the engine crankshaft rotating device ① from the flywheel casing.

Remove the coolant pipe assembly



1. Use a 13mm socket wrench to remove the M8×50-10.9 hexagon flange bolts ① (2 pcs), and take out the coolant pipe assembly ②.

Remove the coolant elbow



1. Use a 13mm socket wrench to remove the M8 hexagon flange bolts ② (4 pcs), and take out the gasket and the coolant elbow ①.

Install coolant elbow



Installation steps

1. Apply a proper amount of Vaseline to the gasket and install it into the coolant elbow ①.

2. Use a 13mm socket wrench to tighten the M8 hexagon flange bolt ② (4 piece) to (30±3) Nm.

Auxiliary material: Vaseline

Install the coolant pipe assembly

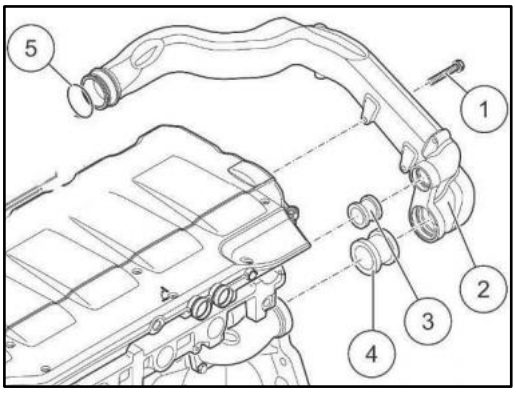

1. Apply Vaseline to the mating surfaces of the connecting pipes ③ and ①, and install the connecting pipes ③ and ① onto the coolant elbow ②.

2. Apply Vaseline to the O-ring ⑤ and install it onto the coolant elbow ②.

Auxiliary material: Vaseline

Note: The connecting pipe and O-ring are disposable parts.

Install the coolant pipe assembly



1. Install the coolant pipe assembly ②, and use a 13mm socket wrench to tighten the M8×50-10.9 hexagon flange bolts ① (2 pcs) to a tightening torque of (30±3) N·m.

Remove the coolant elbow

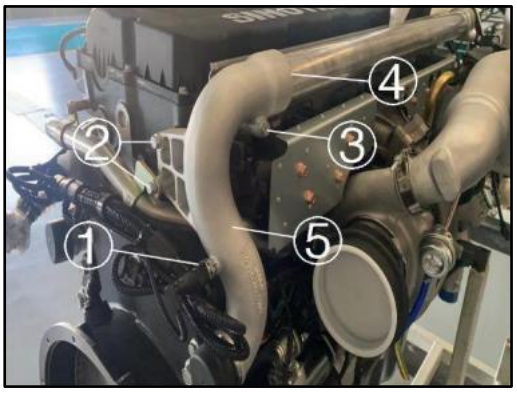

Removal steps

1. Pull out the water temperature sensor ①, and use a 15mm socket wrench to remove the M10×75-10.9 hexagon flange bolt ③ (1 pc).

2. Use a 13mm socket wrench to remove the M8×50-10.9 hexagon flange bolt (1 pc) and M8×40-10.9 hexagon flange bolt (1 pc) ②, and take out the coolant elbow ⑤.

Note: This procedure applies to models with a hydraulic retarder.

Remove the coolant elbow

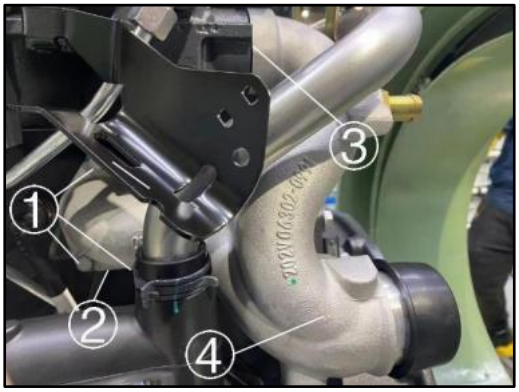

1. Use a 13mm socket wrench to remove the M8×25-10.9 hexagon flange bolts ① (3 pcs), and take out the coolant elbow ④.

Note: This procedure applies to models with a hydraulic retarder.

Install coolant elbow

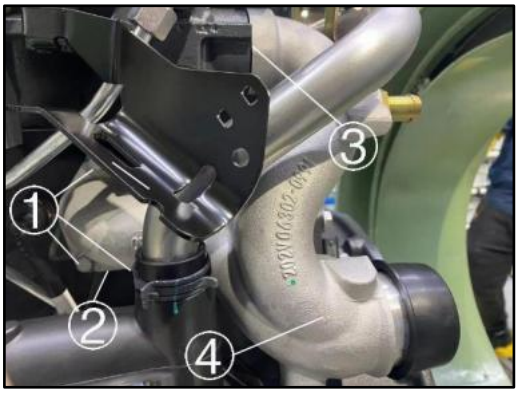

Installation steps

1. Position the coolant elbow for installation, install the connecting pipe at the junction ③, and install the O-ring at the junction ②. Apply a proper amount of P80 lubricant to the contact surfaces of the connecting pipe and the O-ring.

2. Use a 13mm socket wrench to tighten the M8*25-10.9 hexagon flange bolt ① (3 piece) to (30±3) Nm.

Auxiliary material: P80 lubricant

Note: The connecting pipe and O-ring are disposable parts. This procedure applies to models with a hydraulic retarder.

Install coolant elbow

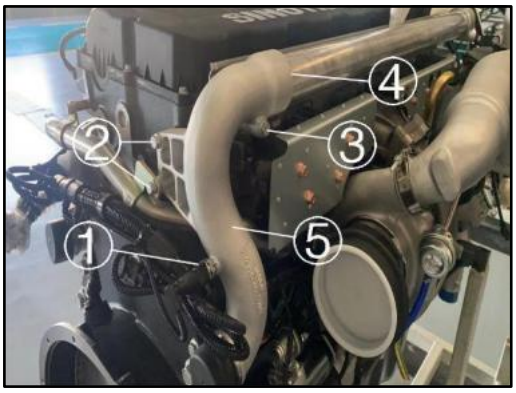

1. Position the coolant elbow ⑤ for installation, connect the temperature sensor ①, and install the O-ring at the junction ④. Apply a proper amount of P80 lubricant to the contact surface of the O-ring.

2. Use a 15mm socket wrench to tighten the M10*75-10.9 hexagon flange bolts ③ (1 pcs) to (65±6) Nm.

3. Use a 13mm socket wrench to tighten ② M8*50-10.9 hexagon flange bolt (1) and M8*40-10.9 hexagon flange bolt (1 piece) to (30±3) Nm. Auxiliary material: P80 lubricant

Note: The O-ring is a disposable part.

This procedure applies to models with a hydraulic retarder.

Remove the thermostat water outlet pipe

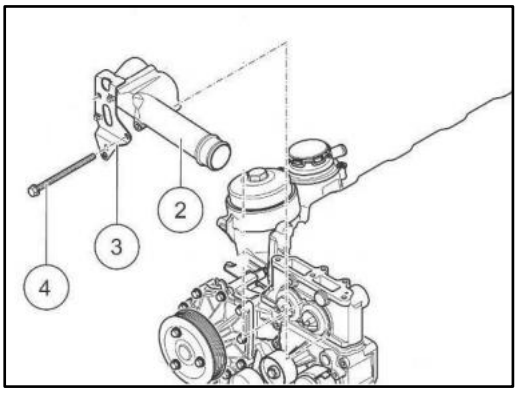

Removal steps

1. Use a 13mm socket wrench to remove ① M8*70-10.9 hexagon flange bolt (1 piece) and M8*100-10.9 hexagon flange bolt (2 pcs), and take out the thermostat water outlet pipe ② and bracket ③.

Removal of the thermostat

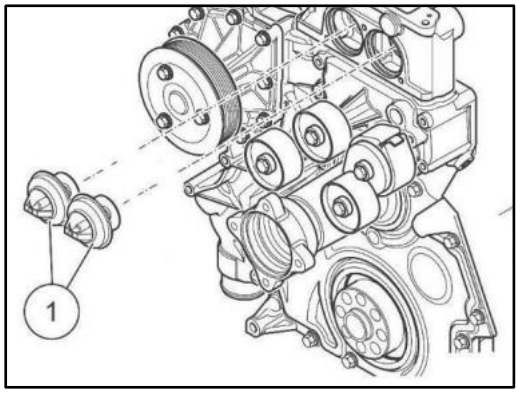

1. Take out the thermostat ①.

Install thermostat

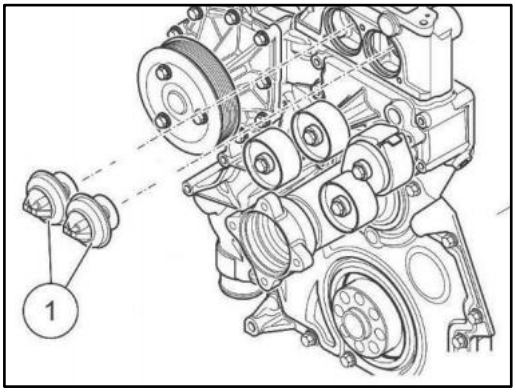

Installation steps

1. Install the thermostat ① into the thermostat housing, with the vent hole on the thermostat above.

Install thermostat water outlet pipe

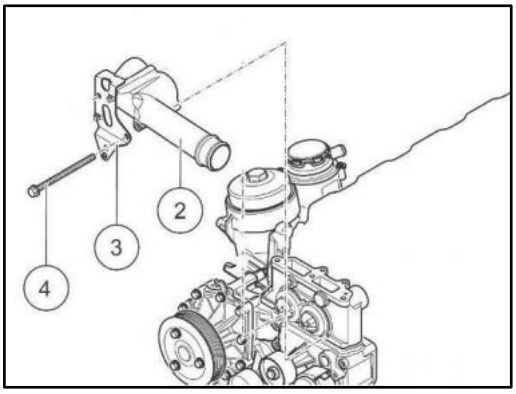

1. Refit the thermostat water outlet pipe ② to the thermostat housing.

2. Use a 13mm socket wrench to tighten ① M8*70-10.9 hexagon flange bolt (1 piece) and M8*100-10.9 hexagon flange bolt (2 pcs) to (30±3)Nm.

Remove the thermostat housing

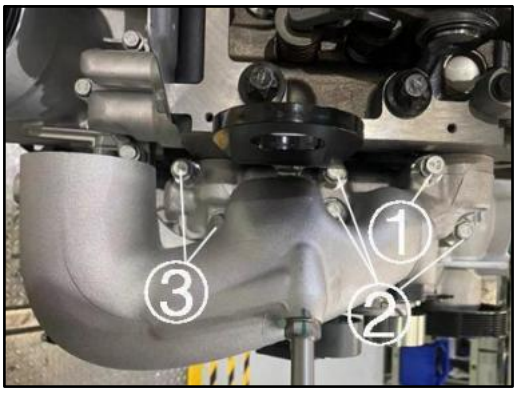

Removal steps

1. Use a 13mm socket wrench to remove the M8×100-10.9 hexagon flange bolt ① (1 pc), M8×80-10.9 hexagon flange bolts ② (3 pcs), and M8×65-10.9 hexagon flange bolts ③ (2 pcs), and take out the thermostat housing.

Replace the connecting pipe

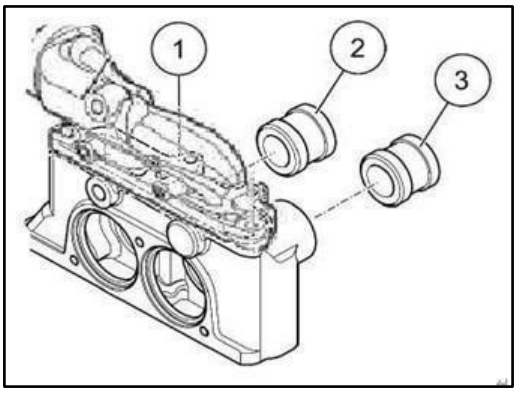

1. Remove the connecting pipes ② and ③ from the thermostat housing ①.

2. Apply a layer of Vaseline to the mating surfaces of the new connecting pipes ② and ③, and install the connecting pipes ② and ③ into the thermostat housing ①.

Auxiliary material: Vaseline

Note: The connecting pipe is a disposable part.

Install thermostat housing

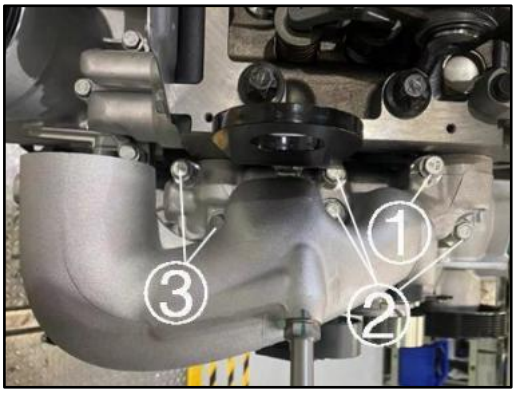

Installation steps

1. Fix the thermostat housing additional gasket to the distribution housing, and use a 13mm socket wrench to tighten the M8*100-10.9 hexagon flange bolt ① (1), M8*80-10.9 hexagon flange bolts ② (3 pcs), and M8*65-10.9 hexagon flange bolts ③ (2 pcs) to (30±3) Nm.

Note: The sealing gasket is a disposable part.

Remove the air outlet pipe

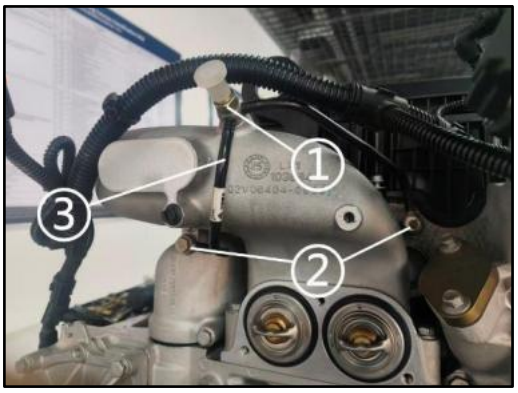

Removal steps

1. Use a 13mm socket wrench to remove the bolts ② (2 pcs), use a 19mm open-end wrench to remove the bolt ① (1 pc), and take out the air outlet pipe ③.

Removal of the water inlet pipe

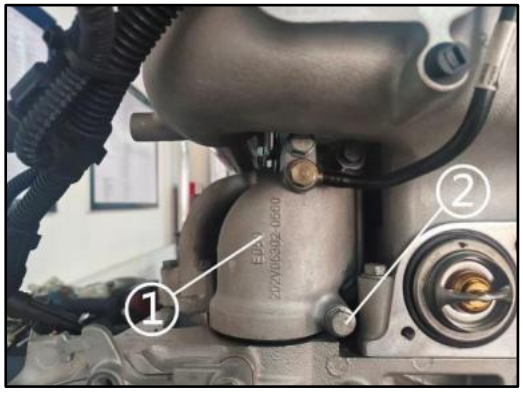

1. Use a 13mm socket wrench to remove the hexagon flange bolts ② (3 pcs), and take out the water inlet pipe ①.

Installation of the water inlet pipe

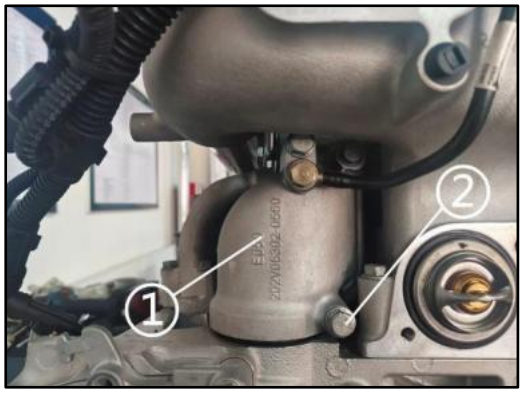

Installation steps

1. Install the water inlet pipe ① into position, and use a 13mm socket wrench to tighten the hexagon flange bolts ② (3 pcs) to a tightening torque of (30±3) N·m.

Install the air outlet pipe

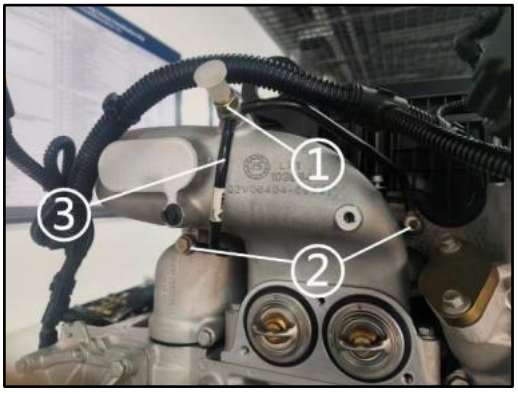

1. Use a 13mm socket wrench to tighten the bolts ② (2 pcs) to a tightening torque of (30±3) N·m.
2. Use a 19mm open-end wrench to tighten the bolt ① (1 pc) to a tightening torque of (30±3) N·m.

Remove the ribbed belt

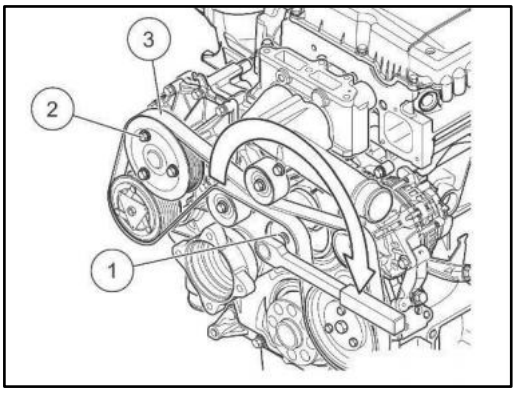

Removal steps

1. Rotate the tensioner ① clockwise to the stop, and take out the ribbed belt ③.

Remove the pulley

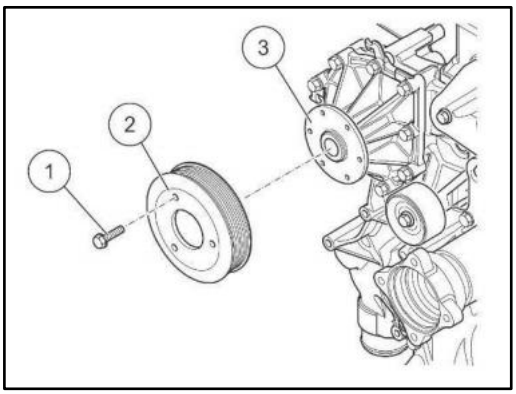

1. Use a 13mm socket wrench to remove the M8*12-8.8 hexagon flange bolts ① (3 pcs), and take out the pulley ②.

Removal of water pump

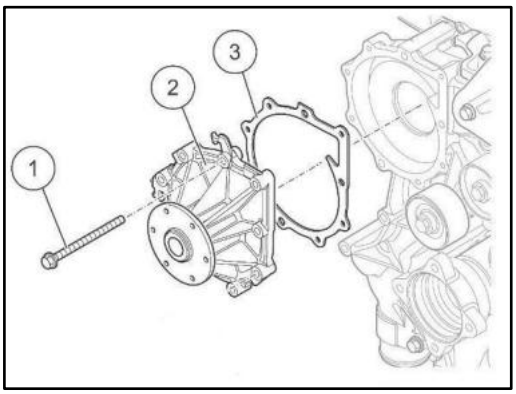

1. Use a 13mm socket wrench to remove the M8*35-10.9 hexagon flange bolts ① (6 pcs), and take out the water pump ② and gasket ③.

Installation of water pump

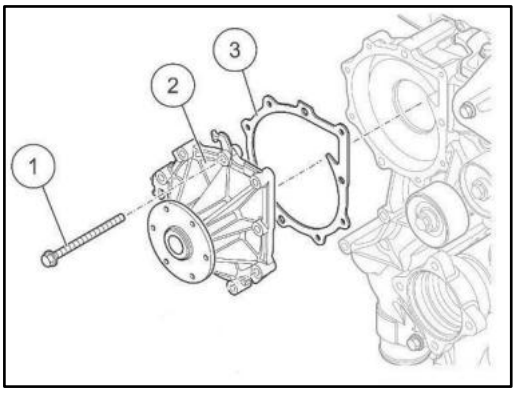

Installation steps

1. Fix the gasket ③ and water pump ②, and use a 13mm socket wrench to tighten the M8*35-10.9 hexagon flange bolts ① (6 pcs) to (35±3) Nm.

Note: The gasket is a disposable part.

Removal of distribution housing

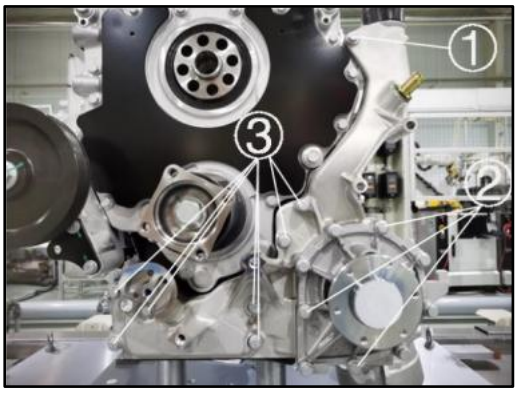

Removal steps

1. Use a 13mm socket wrench to remove the M8*25-10.9 hexagon flange bolt ① (1 piece), M8*130-10.9hexagon flange bolt ② (3 pcs) and M8*100-10.9 hexagon flange bolt③ (7 pcs), and take out the distribution housing.

Installation of distribution housing

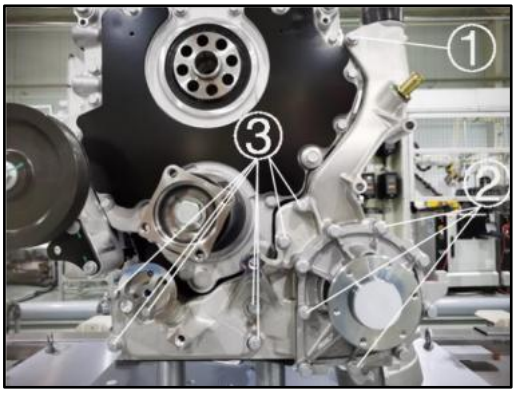

1. Install the distribution housing with gasket to the corresponding position, and use a 13mm socket wrench to tighten the M8*25-10.9 hexagon flange bolt ① (1 piece), M8*130-10.9hexagon flange bolt ② (3 pcs) and M8*100-10.9 hexagon flange bolt ③ (7 pcs) to (30±3) Nm.

Note: The gasket is a disposable part.

Install pulley

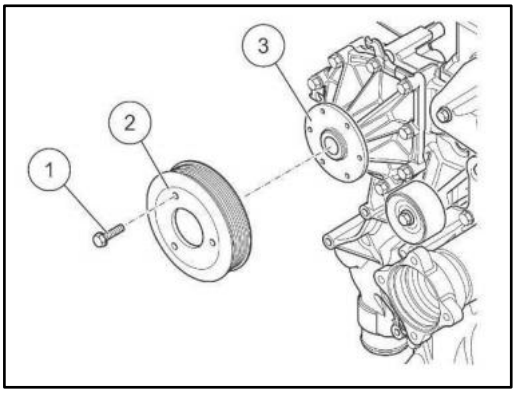

1. Install the pulley ② to the hub ③, and use a 13mm socket wrench to tighten the M8*12-8.8 hexagon flange bolts ① (3 pcs) to (24±2) Nm.

Install the ribbed belt

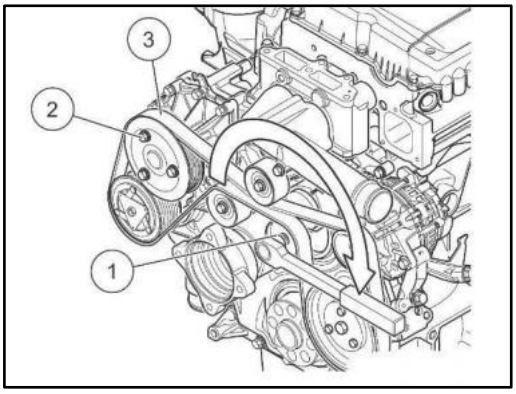

1. Rotate the ribbed belt tensioner ① clockwise to the stopper position, fix it, and install the V-ribbed tape ③.

Fuel supply system

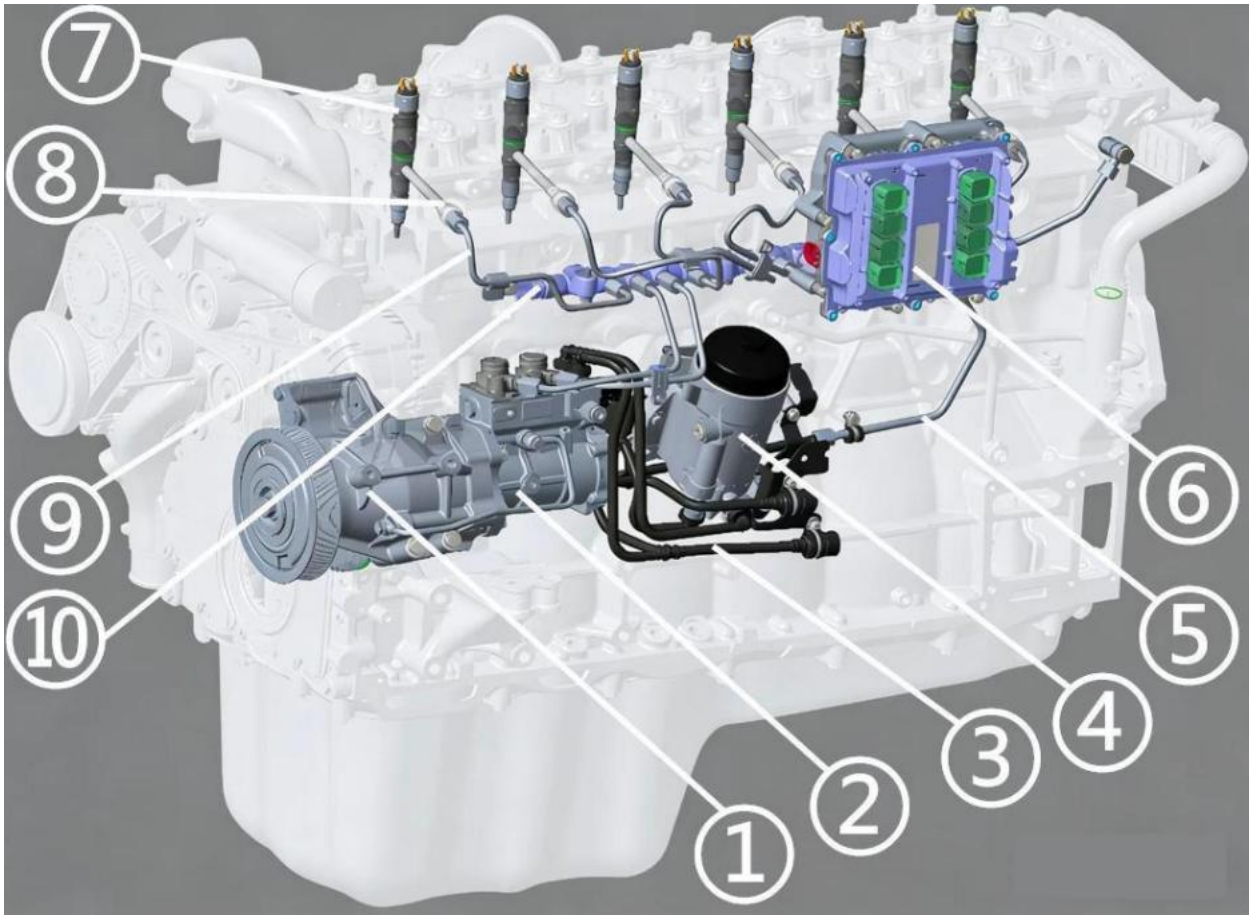

1. Drive housing 2. Oil pump 3. Low-pressure oil pipe 4. Filter 5. Oil return pipe 6. ECU
7. Injector 8. Oil inlet connector 9. High-pressure oil pipe 10. Common rail

Remove the oil dipstick bracket

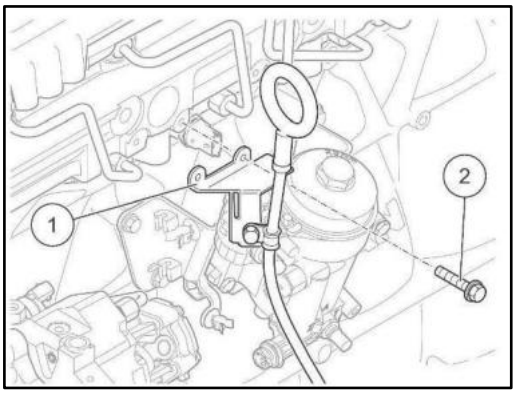

Removal steps

1. Use a 13mm socket wrench to remove the M8*16-10.9 hexagon flange bolt ② (2 piece).

Remove the common rail pressure sensor

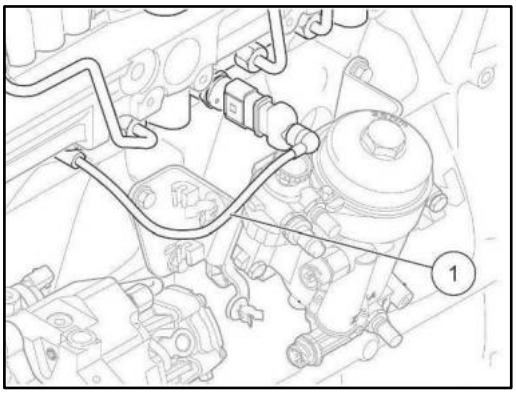

1. Disconnect the electrical connector plug ① of the common rail pressure sensor.

Remove the oil return pipe

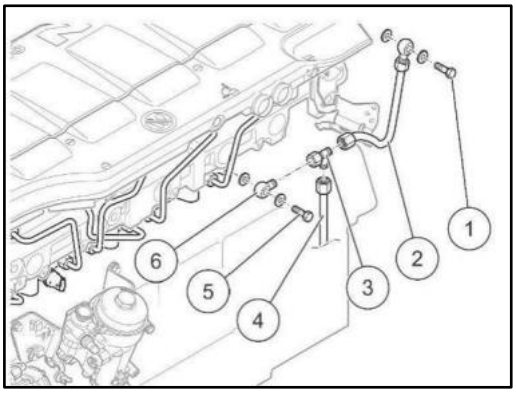

1. Use a 19mm shaped wrench to remove the hollow bolt ①, and drain the oil from the oil return pipe.

2. Use a 19mm shaped wrench to remove the fuel pipe nut ② from the tee connector ③.

3. Use a 19mm shaped wrench to remove the fuel pipe nut ④ from the tee connector.

4. Use a 19mm shaped wrench to unscrew the tee connector ③ from the ring connector ⑥.

5. Use a 19mm shaped wrench to remove the hollow bolt ⑤.

Note: Ensure cleanliness during the removal of the oil pipe assembly.

Removal of the high-pressure fuel pipe

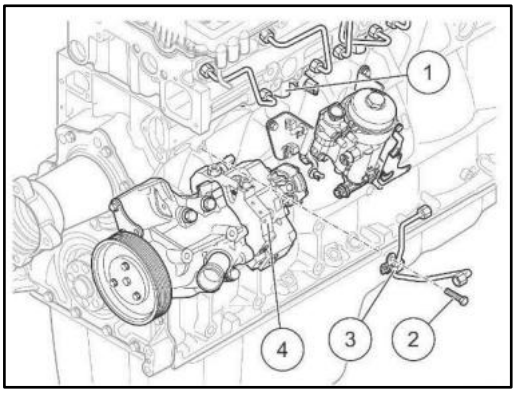

1. Use a 13mm socket wrench to remove the M8*16-10.9 hexagon flange bolt ② (1 pc), use a 19mm open-end wrench to remove the nuts at both ends of the high-pressure oil pipe ③, and take out the high-pressure oil pipe.

Note: Ensure cleanliness during the removal of the oil pipe assembly.

Removal of the high-pressure fuel pipe

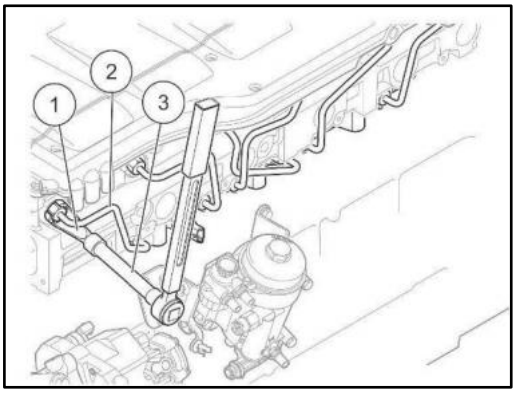

1. Mark the installation position of the high-pressure oil pipe, use a 19mm open-end socket ① to remove the high-pressure oil pipe ②, and repeat the above steps to remove other oil pipes.

Note: Each time an oil pipe is removed, the corresponding interface must be plugged with a clean protective cap.

Remove the common rail assembly

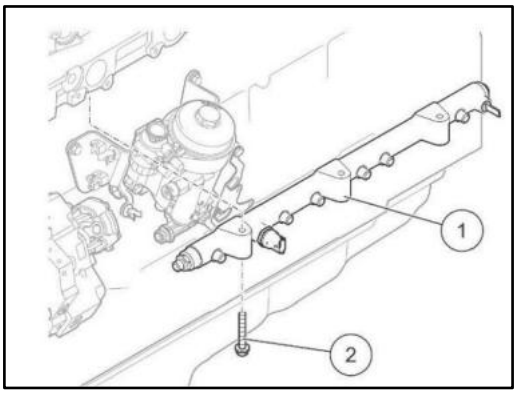

1. Use a 13mm socket wrench to remove the M8*35-10.9 hexagon flange bolts ② (3 pcs), and take out the common rail assembly.

Removal of the fuel inlet adapter

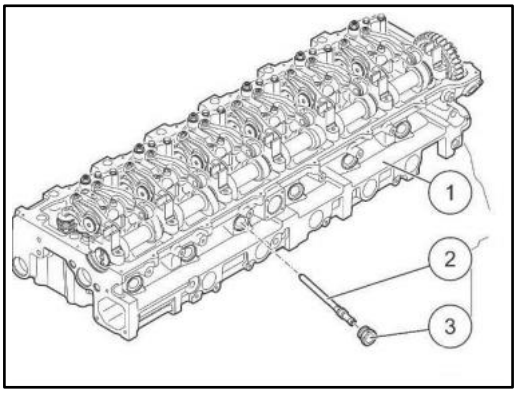

1. Use a 24mm socket wrench to remove the pressure plate nut ③, and take out the oil inlet connector ②.

Removal of the fuel injector harness

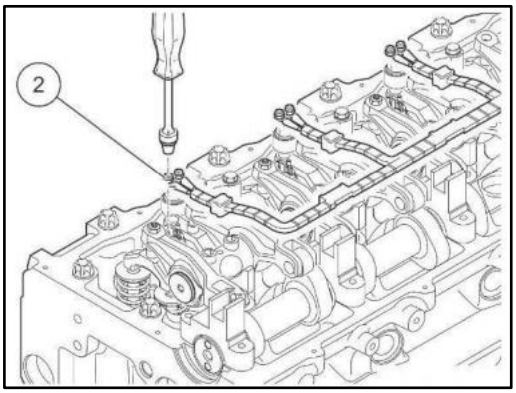

1. Use a torque screwdriver to remove the nut ②, and take out the injector harness.

Removal of the fuel injector harness

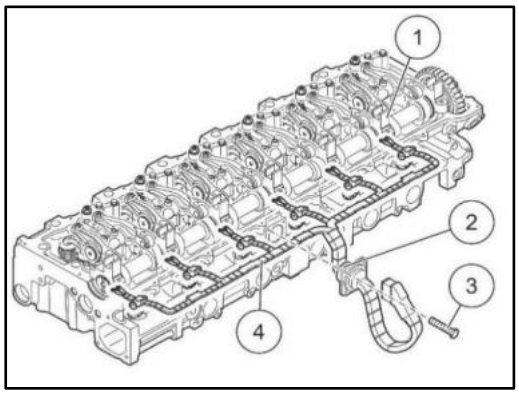

1. Use a 10mm socket wrench to remove the M6*15-10.9 hexagon flange bolts ③ (4 pcs), and take out the injector harness.

Remove the injector harness (DRB model)

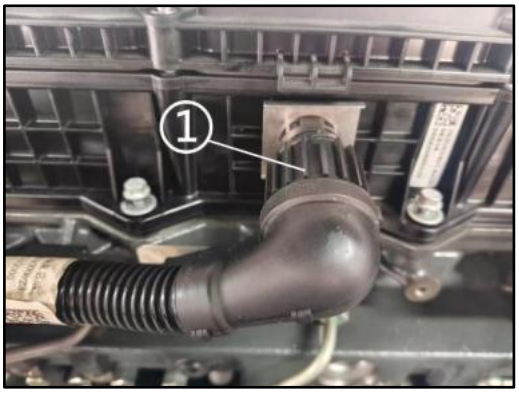

1. Rotate the harness plug ① counterclockwise and unplug the harness plug.

Remove the injector harness (DRB model)



1. Pull out the locking plate ① and push the plug ② into the cylinder head.

Remove the injector harness (DRB model)

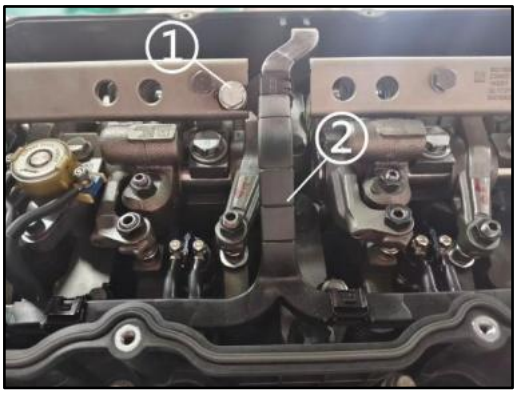

1. Remove the M8*15 hexagon flange bolts ① (6 pcs) with a 13mm socket wrench.

Remove the injector harness (DRB model)

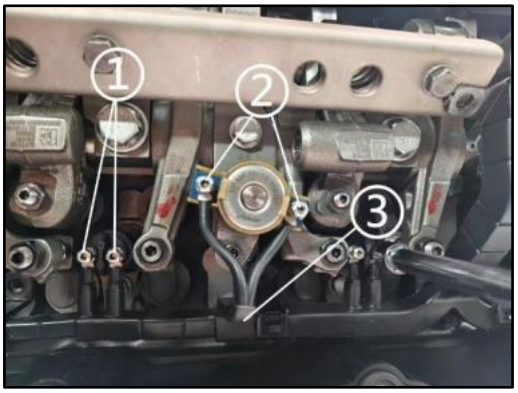

1. Use a 7mm socket to remove the injector harness nut ① and the DRB solenoid valve nut ②, then remove the harness ③.

Removal of the fuel injector

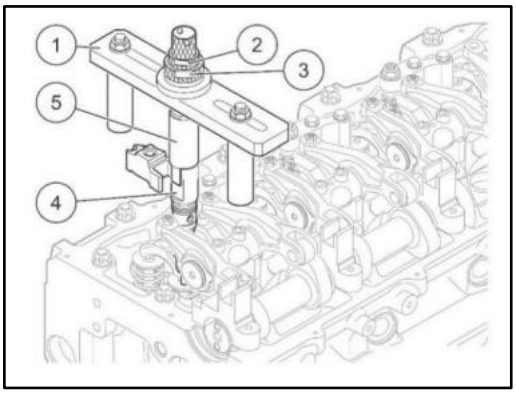

1. Install the extractor in the groove of the fuel injector pressure plate and clamp the clamping sleeve ⑤ with the knurled nut ②.

2. Take out the fuel injector ④ from the cylinder head by rotating the knurled nut ③.

Note: after the fuel injector is removed, pay attention to bumps, and place it on special station equipment for storage.

Install the injector and common rail assembly

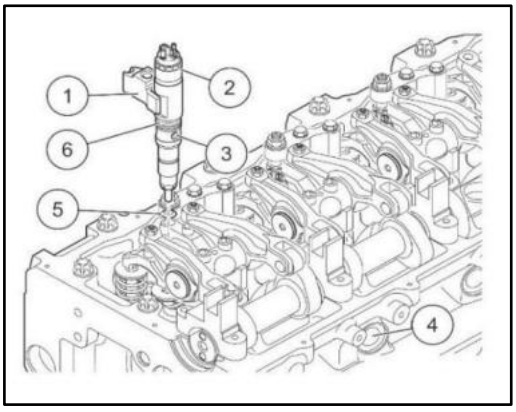

Installation steps

1. Replace with a new seal ring ⑤, and ensure the cylinder hole is clean.

2. Make sure that the fuel inlet ③ faces the fuel injector oil inlet pipe joint port ④.

3. Install the fuel injector pressure plate ① and fuel injector ② together, place the other end of the fuel injector pressure plates on the thrust block, and press the fuel injector into the cylinder head positioning groove with the fuel injector pressing tool.

Installation of the fuel injector

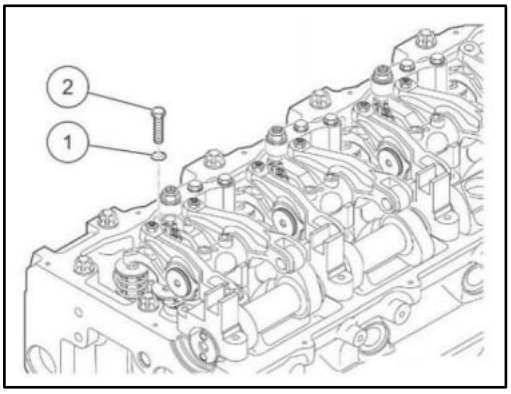

1. Fix the pressure plate bolt, and tighten the spherical washer ① and M8*50-10.9 hexagon flange bolt ② (1 pc) with a 13mm socket.

2. Tighten the bolt ② to the initial torque of (1-2) Nm.

Install the oil inlet connector

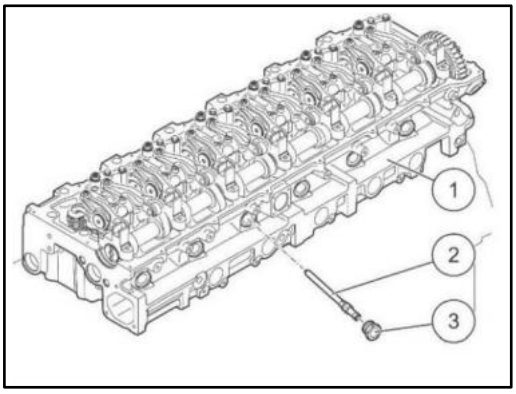

1. Take the fuel injector oil inlet pipe joint ②, and apply Vaseline to the O-ring with a tool to ensure that the O-ring is evenly and continuously applied around.

2. Put the oil inlet pipe joint into the cylinder head mounting hole ①, and ensure that the two positioning balls on the oil inlet pipe joint correspond to the notch at the cylinder head hole.

3. Use the oil inlet pipe joint pressing tool to press the oil inlet pipe joint from the intake side of the cylinder head to the bottom, and ensure that the oil inlet pipe joint is connected with the fuel injector inlet in place.

Auxiliary material: Vaseline

Tighten the pressure plate bolts

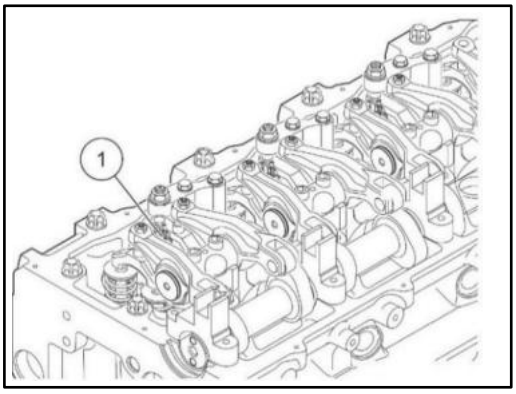

1. Use a 13mm socket wrench to tighten the pressure plate bolt ① to the torque of (25) Nm+(90)° and the final tightening torque of (28-60) Nm.

Note: The pressure plate bolt is a disposable part.

Tighten the pressure plate nut

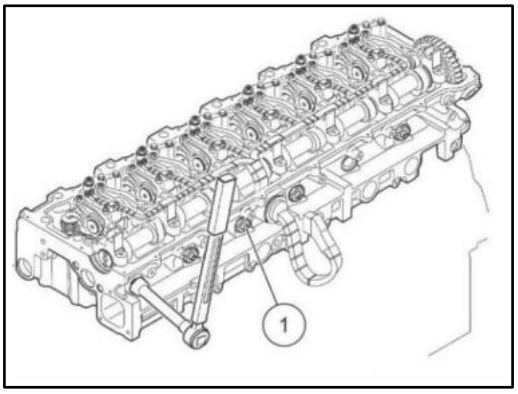

1. Tighten the pressure plate nut with a 24 mm socket wrench to a torque of (20) Nm+(90)° and a final torque of (40-85) Nm.

Note: The oil inlet pipe joint and pressure plate nut are disposable parts.

Installation of the fuel injector harness

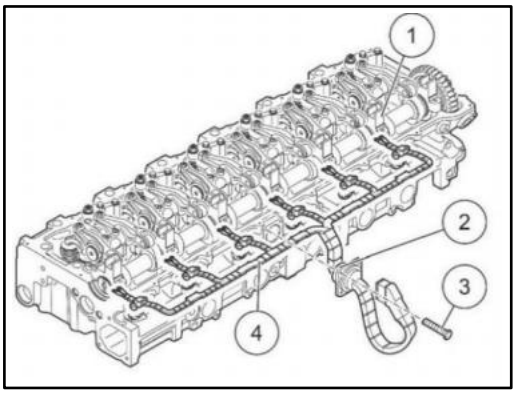

1. Install the injector harness from the branched end to the center harness hole on the intake side of the cylinder head, and apply P80 lubricant to the O-ring ② of the fixing flange.

2. Secure the injector harness, and use a 10mm socket wrench to tighten the M6*15-10.9 hexagon flange bolts ③ (4 pcs) to a tightening torque of (15±1) N·m.

Auxiliary material: P80 lubricant

Installation of the fuel injector harness

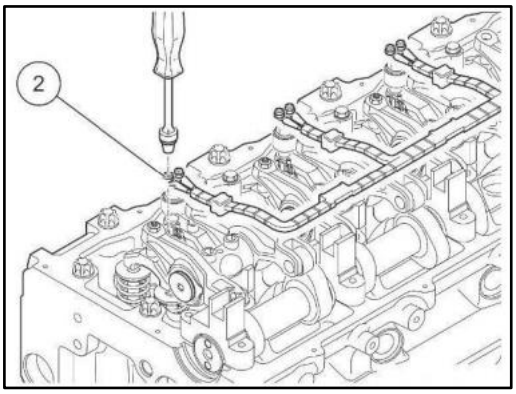

1. Use a torque screwdriver to tighten the fuel injector harness nut ② to (1.8+0.25) Nm.

Installing the injector harness (DRB model)



1. Install the injector harness ② into position, and lock it using the locking plate ①.

Installing the injector harness (DRB model)

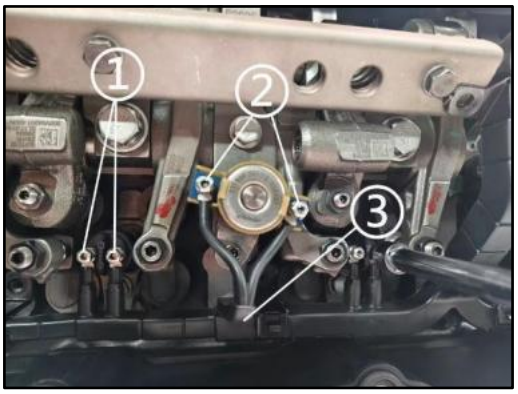

1. Hand-tighten the DRB solenoid valve harness nut ② and the injector harness nut ① by 2-3 threads, then use a 7mm socket to tighten them to a torque of 2 N·m.

Installing the injector harness (DRB model)

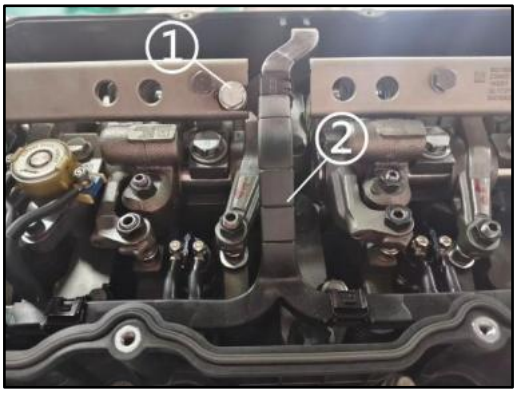

1. Use a 13mm socket wrench to tighten the M8×15 hexagon flange bolts ① (6 pcs) to a tightening torque of (35+3) N·m.

Installation of the cylinder head cover

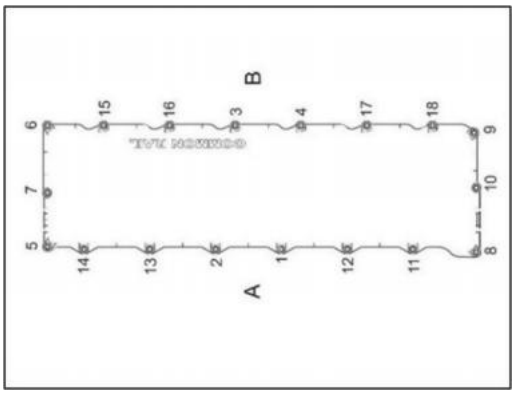

1. Use a 10mm socket wrench to tighten the bolts in the order shown in the figure to a tightening torque of (10±1) N·m.

Secure wire harness cover

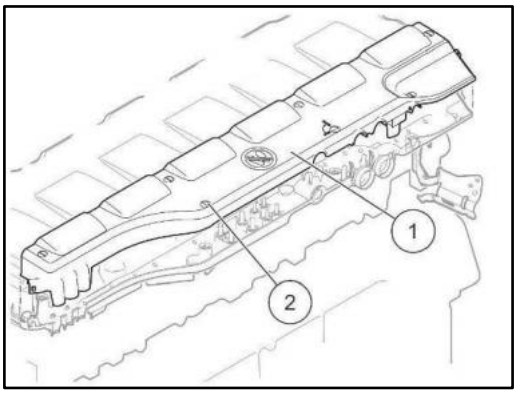

1. Install the wire harness cover ①, and turn the knobs ② (7 pcs) 90° clockwise to lock them.

Install common rail assembly

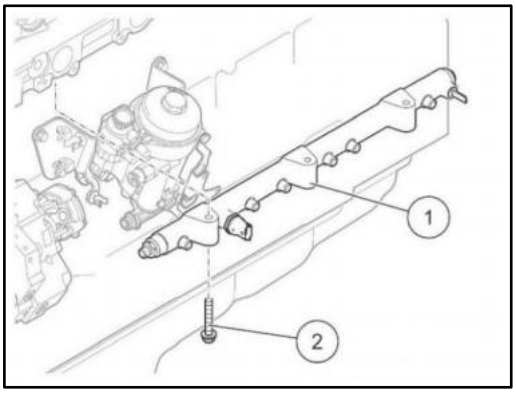

1. Position the common rail assembly ①, and use a 13mm socket wrench to loosely tighten the M8×35-10.9 hexagon flange bolts ② (3 pcs).

Installation of the high-pressure fuel pipe

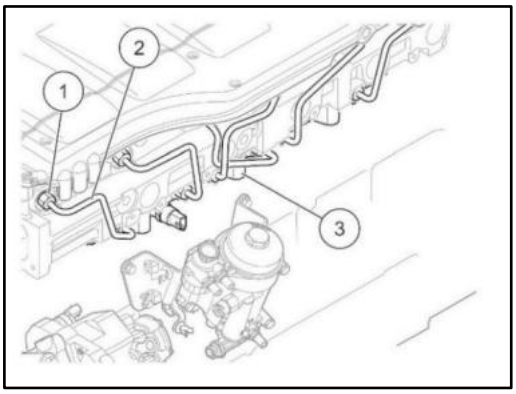

1. Connect the high-pressure fuel pipe ②, common rail assembly ③, and common rail connecting pipe ①; the connecting nut with the coding end shall be connected to the common rail.

2. Use a 19 mm open-end wrench to tighten the oil inlet pipe joint end from cylinder 1 in turn, and then tighten the common rail end. Before tightening the high-pressure pipe, the oil pipe must be adjusted to the nut center with a pre-tightening torque of (10±1) Nm.

Install common rail assembly

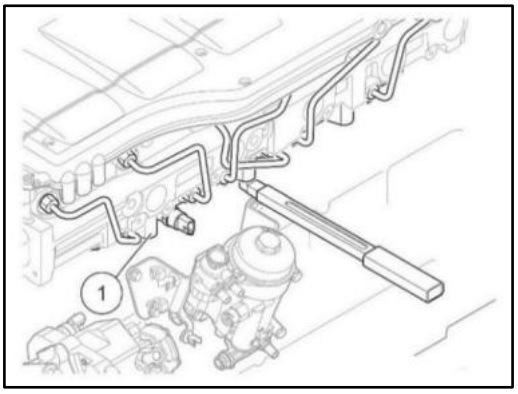

1. Tighten the bolt Ⓘ to a tightening torque of (35±5) N·m.

Installation of the high-pressure fuel pipe

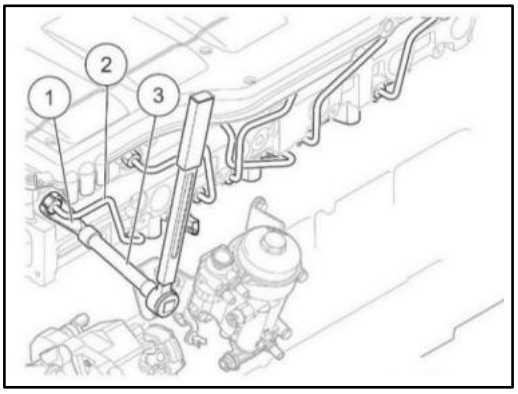

1. Turn the angle to (60±5)°, tighten the oil inlet pipe joint end from cylinder 1 first, then tighten the common rail end. Final tightening torque of high pressure oil pipe is (35-78) Nm.

Note: The high-pressure fuel pipe is a one-time-use part; replace it with a new one if the torque or rotation angle is not compliant.

Installation of the high-pressure fuel pipe

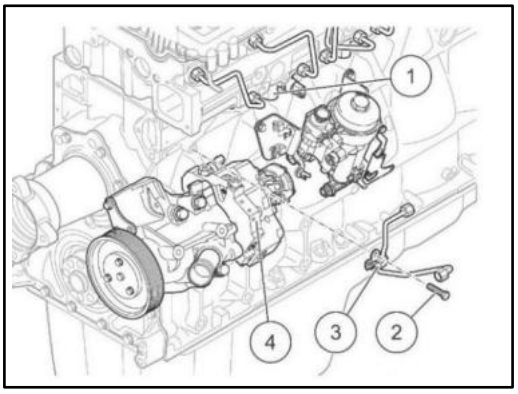

1. Connect the high-pressure fuel pipe ③, high-pressure fuel pump ④, and common rail assembly ①; use a 19mm open-end wrench to tighten the nuts at both ends of the high-pressure fuel pipe ③ to an initial torque of 10 N·m.

2. Use a 13mm socket wrench to screw in the M8×16-10.9 hexagon flange bolt ② (1 pc) by 2-3 threads, tighten the nuts at both ends of the high-pressure fuel pipe ③ to a final rotation angle of 60°, and tighten the bolt ② to a tightening torque of (30±3) N·m.

Note: The high-pressure fuel pipe is a one-time-use part; replace it with a new one if the torque or rotation angle is not compliant.

Install oil dipstick bracket

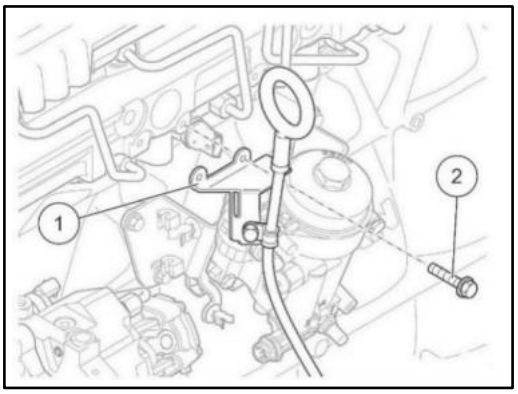

1. Install the positioning bracket ① along with the oil dipstick, and use a 13mm socket wrench to tighten the M8×16-10.9 hexagon flange bolts ② (2 pcs) to a tightening torque of (35±3) N·m.

Install common rail pressure sensor plug

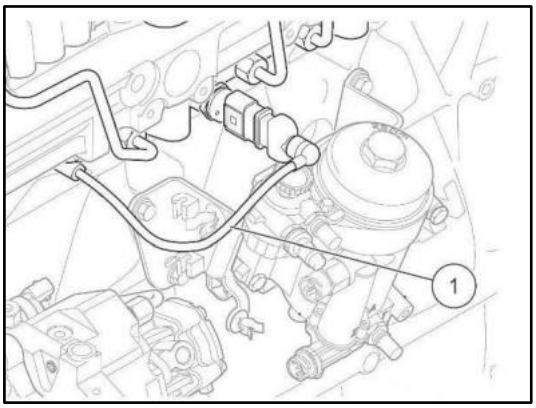

1. Connect the electrical connector plug ①.

Remove high-pressure fuel pump

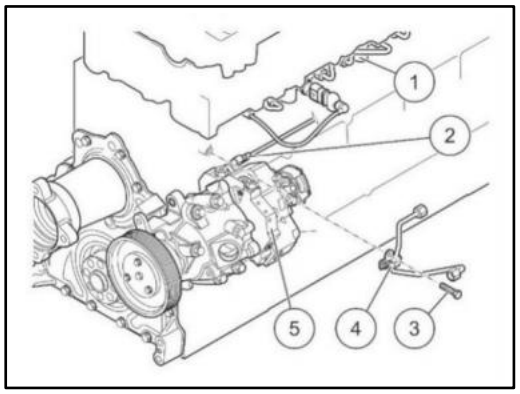

1. Disconnect the electrical connector plug ② of the metering unit, and use a 13mm socket wrench to remove the M8×16-10.9 hexagon flange bolt ③.
2. Use a 19mm open-end wrench to remove the nuts at both ends of the oil pipe, and take out the oil pipe.

Remove high-pressure fuel pump

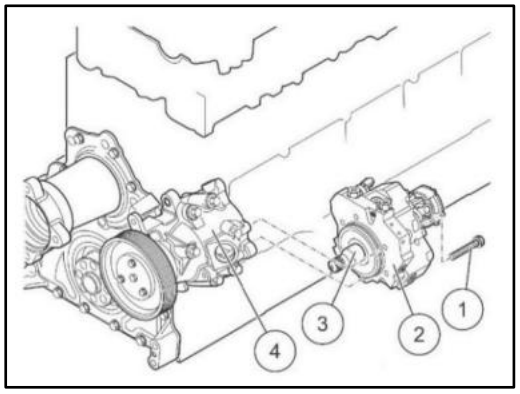

1. Use a 15mm socket wrench to remove the M10×55-10.9 hexagon flange bolts ① (3 pcs), and take out the high-pressure fuel pump ②.

Remove drive housing

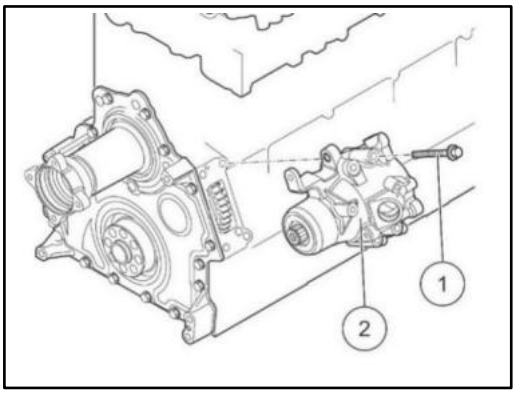

1. Use an 18mm socket wrench to remove the M12×90-10.9 hexagon flange bolts ① (4 pcs), take out the drive housing, and clean the joint surface.

Install drive housing

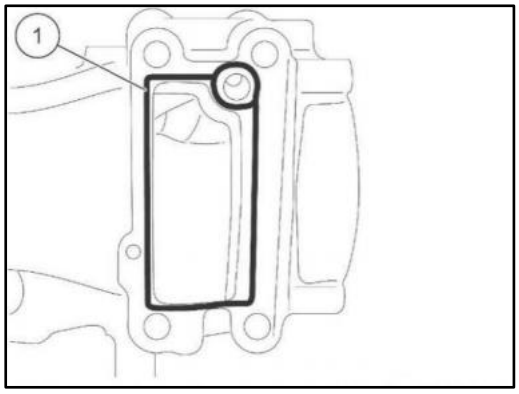

Installation steps

1. Apply a layer of Loctite 5900 sealant ① on the contact surface of the drive housing.

Auxiliary material: Loctite 5900

Note: The glue bead must be continuous and uniform without breaks, and the exposure time of the glue bead must be ≤ 24 min.

Install drive housing

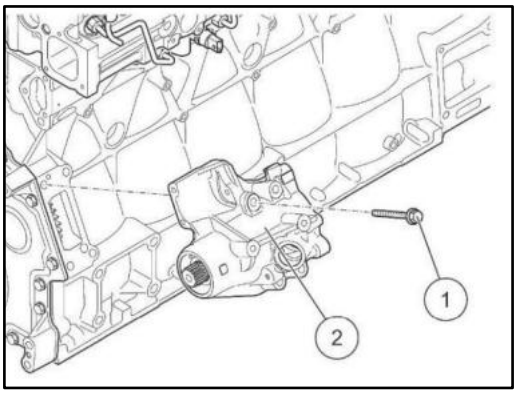

1. Position the drive housing ②, and use an 18mm socket wrench to tighten the M12×90-10.9 hexagon flange bolts ① (4 pcs) to a tightening torque of (110±11) N·m.

Install high-pressure fuel pump

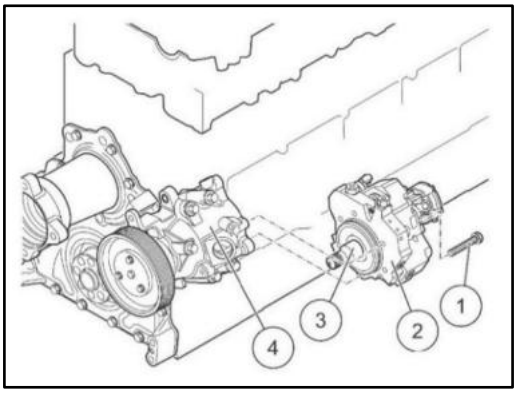

1. Install the intermediate drive shaft ③ onto the drive shaft of the high-pressure oil pump ②.

2. Install the high-pressure fuel pump ② into the drive housing ④, and use a 15mm socket wrench to tighten the M10×55-10.9 hexagon flange bolts ① (3 pcs) to a tightening torque of (65±6) N·m.

Remove fuel pipe

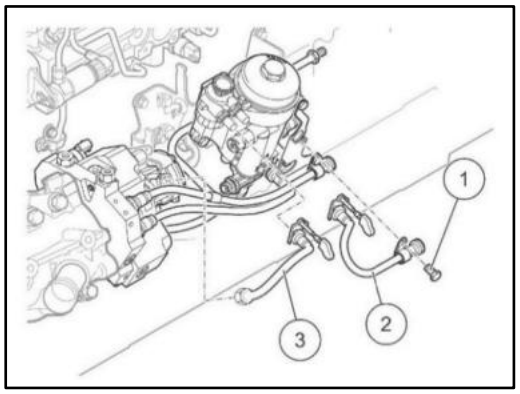

Removal steps

1. Use a 10mm socket wrench to remove the M6×16-10.9 hexagon flange bolt ① (1 pc), and take out the oil pipe ③.

Remove fuel pipe

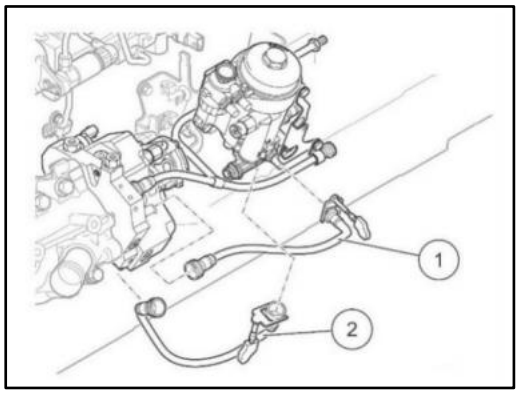

1. Remove the oil pipes ① and ②.

Remove fuel pipe

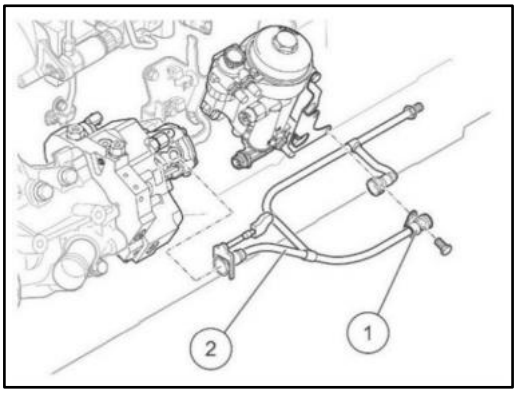

1. Use a 10mm socket wrench to remove the M6×16-10.9 hexagon flange bolt ① (1 pc), and take out the oil pipe ②.

Remove the fuel filter

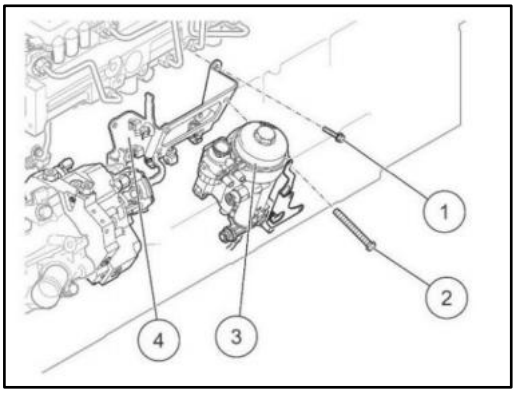

1. Use a 13mm socket wrench to remove the M8×25-10.9 hexagon flange bolts ② (3 pcs), and take out the fuel filter ③.
2. Use a 13mm socket wrench to remove the M8×16-10.9 hexagon flange bolts ① (4 pcs), and take out the bracket ④.

Installation of the fuel filter

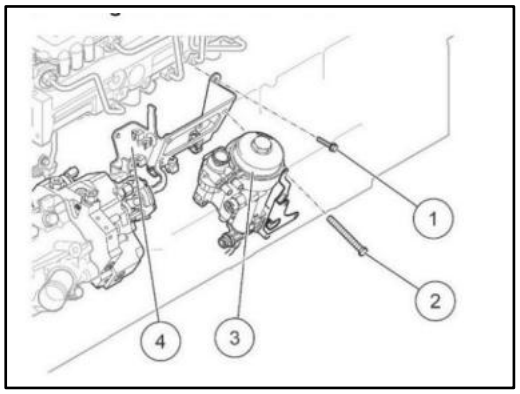

Installation steps

1. Secure the fuel filter bracket ④, and use a 13mm socket wrench to tighten the M8×16-10.9 hexagon flange bolts ① (4 pcs) to a tightening torque of (35±3) N·m.

2. Secure the fuel filter ③, and use a 13mm socket wrench to tighten the M8×25-10.9 hexagon flange bolts ② (3 pcs) to a tightening torque of (18±2) N·m.

Install the fuel pipe

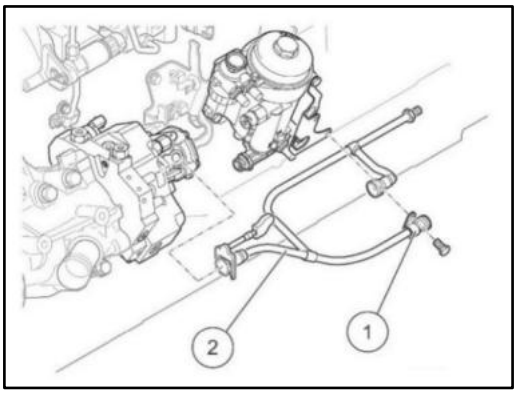

1. Connect the oil pipe ②, and use a 10mm socket wrench to tighten the M6×16-10.9 hexagon flange bolt ① to a tightening torque of (8±1) N·m.

Install the fuel pipe

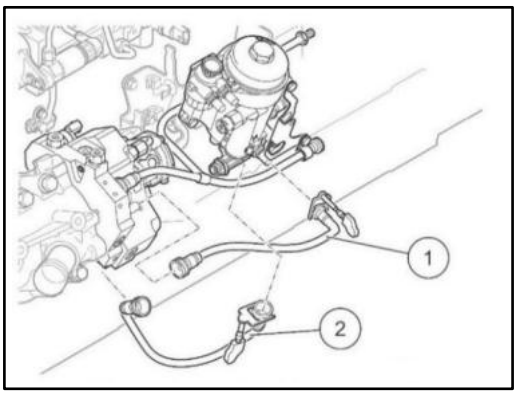

1. Connect the oil pipes ① and ②.

Install the fuel pipe

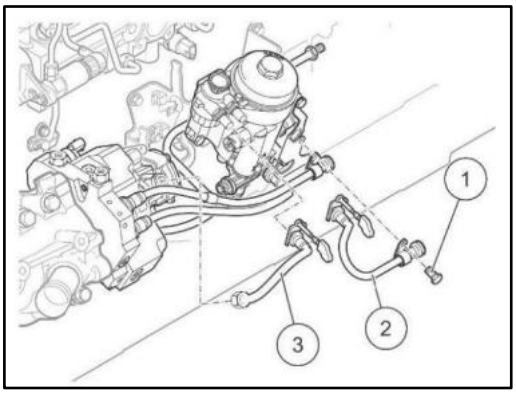

1. Connect the oil pipes ② and ③, and use a 10mm socket wrench to tighten the M6×16-10.9 hexagon flange bolt ① to a tightening torque of (8±1) N·m.

Install the fuel return pipe

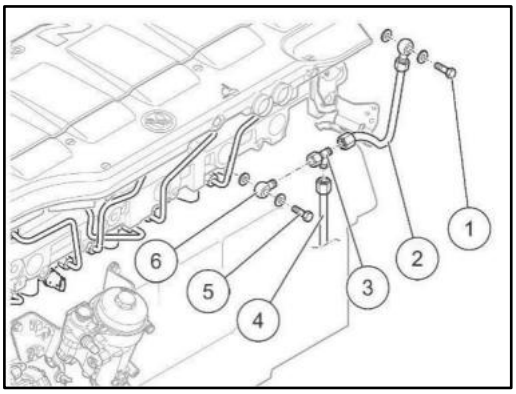

1. Screw the hollow bolt ⑤ into the ring connector ⑥, and screw the tee connector ③ into the ring connector ⑥ and tighten it.

2. Use a 19mm shaped wrench to screw the oil pipe ② onto the tee connector ③, screw the oil pipe ④ onto the tee connector ③, insert the seal ring into the hollow bolt ① and tighten it, tighten the hollow bolt ⑤, and tighten the pressure nuts of oil pipes ② and ④. The tightening torque for both the hollow bolt and the pressure nuts is (20±2) N·m + (90±5)°.

Note: The return pipe and seal ring are disposable parts.

Remove fuel pipe

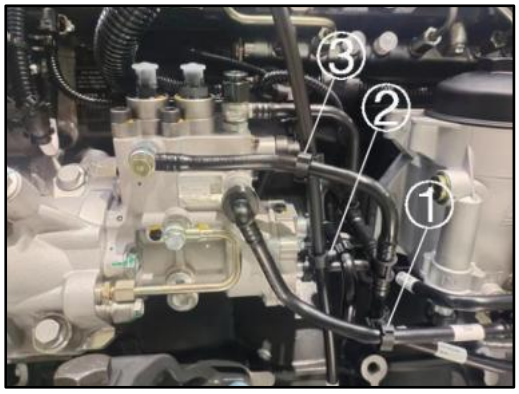

Removal steps

1. Remove the dualHline pipe clamps ①, ②, and ③.

Note: The following are the disassembly and assembly steps for the CB28 high-pressure fuel pump.

Remove fuel pipe

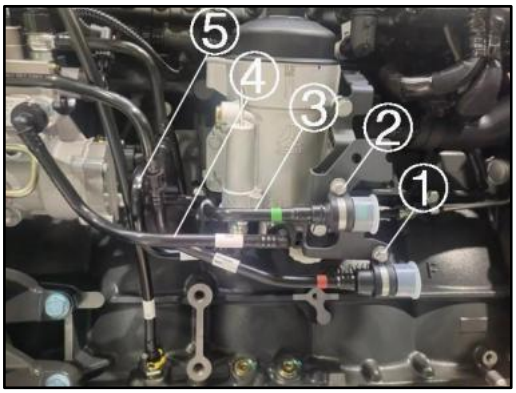

1. Remove the M6*16-10.9 hexagon flange bolts ① and ② with a 10mm socket.
2. Take out the fuel pipes ③, ④, and ⑤.

Remove fuel pipe

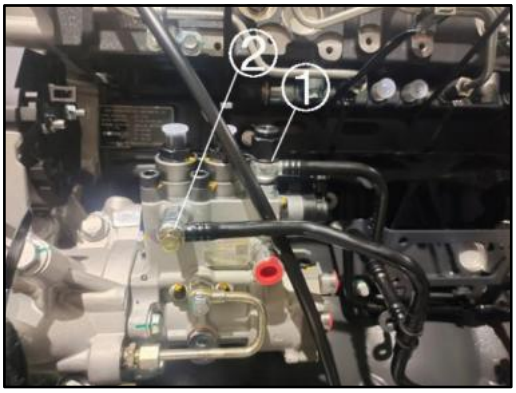

1. Use a 22mm socket wrench to remove the nut ①, and use a 14mm socket wrench to remove the hollow bolt ②.

Remove fuel pipe

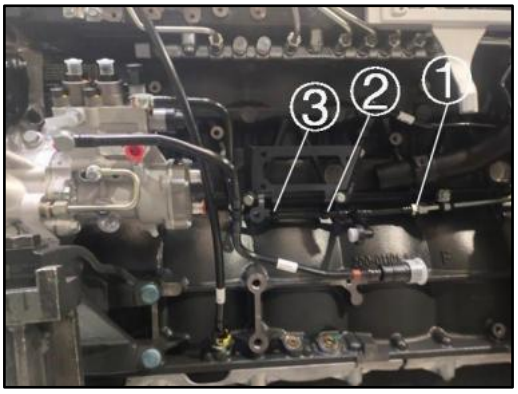

1. Use a 19mm open-end wrench to remove the oil pipe nut ①, loosen the single-line pipe clamps ② and ③ of the diesel filter bracket, and take out the return pipe.

Remove the pump-to-rail fuel pipe

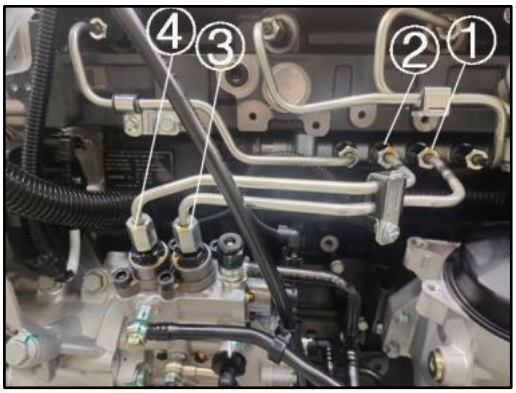

1. Use a 19mm open-end wrench to remove the rail-end nuts ① and ②, then remove the pump-end nuts ③ and ④, and take out the pump-to-rail fuel pipe.

Removal of the fuel pump

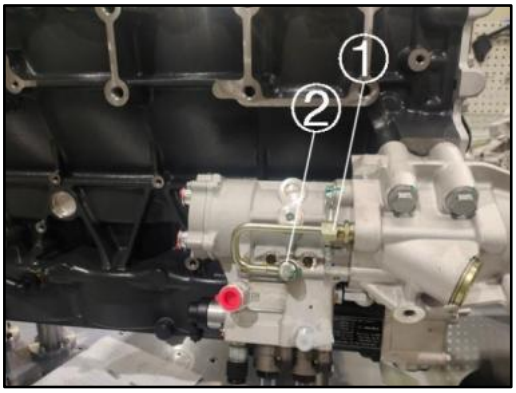

1. Use a 17mm open-end wrench to remove the oil pipe nut ①, use a 14mm socket wrench to remove the hollow bolt ②, and take out the lubrication oil pipe.

Removal of the fuel pump

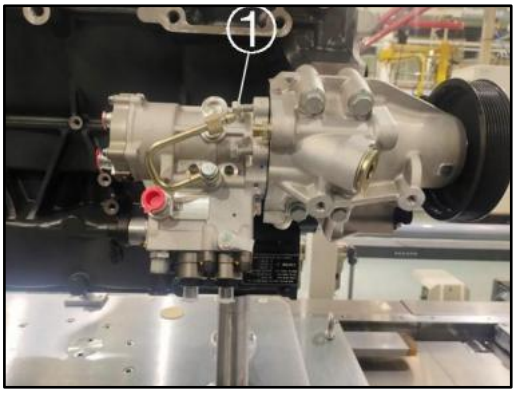

1. Use a 15mm socket wrench to remove the M10×35-10.9 hexagon flange bolts ① (4 pcs), and take out the fuel pump.

Installation of oil pump

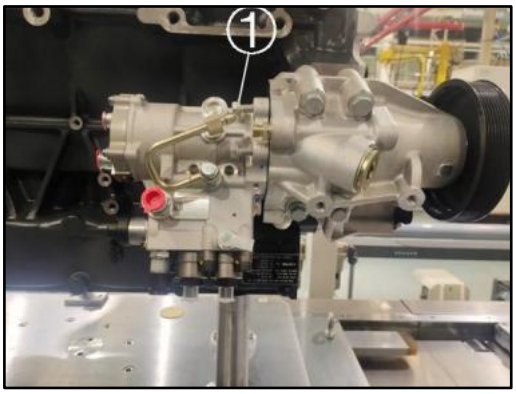

Installation steps

1. Position the oil pump, and use a 15 mm socket wrench to tighten the M10*35-10.9 hexagon flange bolts ① (4 pcs) to (65±6) Nm.

Installation of oil pump

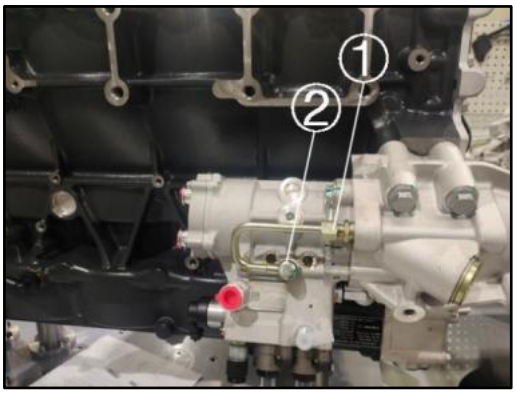

1. Use a 17mm open-end wrench to tighten the oil pipe nut ①, and use a 14mm socket wrench to tighten the hollow bolt ②. The tightening torque for the hollow bolt ② at the connection with the fuel pump is (20±2) N·m, and the tightening torque for the nut ① at the connection with the drive housing assembly is 10 N·m + 180°, with a final torque of (30—40) N·m.

Note: The lubrication oil pipe is a disposable part.

Install the pump-to-rail fuel pipe

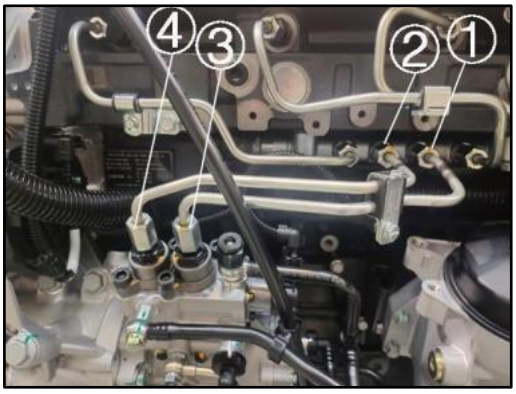

1. Use a 19mm open-end wrench to tighten the rail-end nuts ① and ②, and tighten the pump-end nuts ③ and ④ to a tightening torque of 10 N·m + 90°.

Note: The oil pipe is a disposable part.

Install the fuel pipe

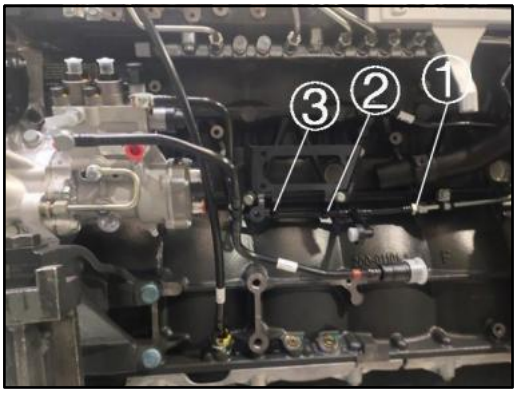

1. Use a 19mm open-end wrench to tighten the oil pipe nut ① to a tightening torque of (20±2) N·m + (90±5)°, connect the fuel pipe, and use the diesel filter bracket single-line pipe clamps ② and ③ to secure the oil pipe.

Install the fuel pipe

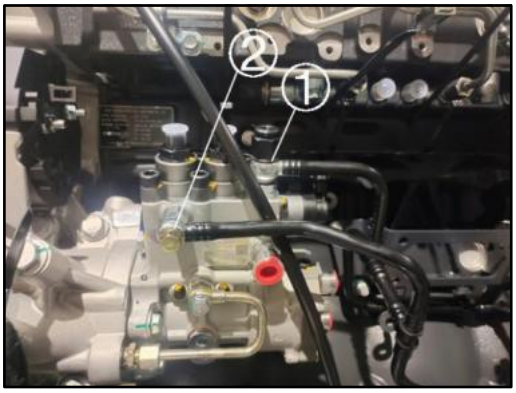

1. Use a 22mm socket wrench to tighten the nut ① to a tightening torque of (25–30) N·m, and use a 14mm socket wrench to tighten the hollow bolt ② to a tightening torque of (15±1) N·m.

Install the fuel pipe

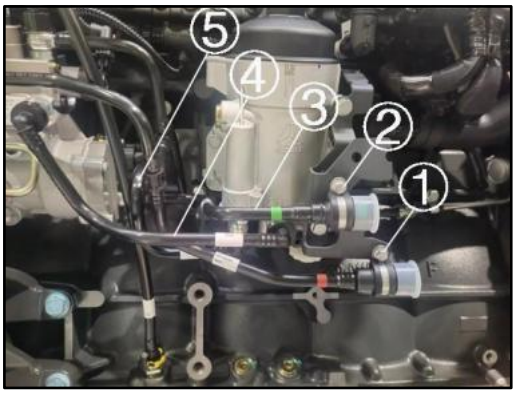

1. Connect the fuel pipes ③, ④, and ⑤; a click sound indicates proper engagement. Use a 10mm socket wrench to tighten the M6×15-10.9 hexagon flange bolts ① and ② to a tightening torque of (8±1) N·m.

Install the fuel pipe

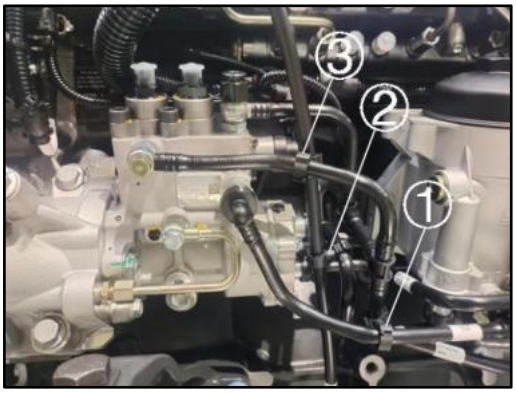

1. Secure the fuel pipe and oil dipstick using the dual-line pipe clamps ①, ②, and ③.

Remove fuel pipe

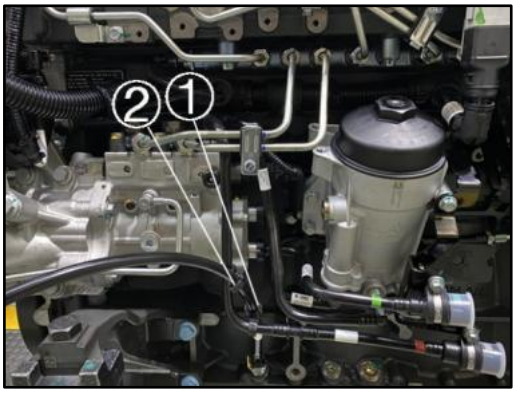

Removal steps

1. Remove the dual-line pipe clamps ① and ②.

Note: The following are the disassembly and assembly steps for the CB6 high-pressure fuel pump.

Remove fuel pipe

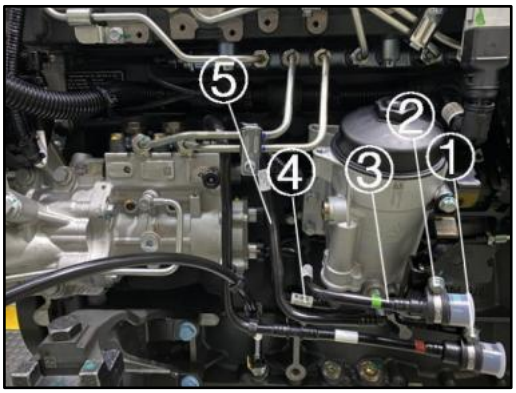

1. Remove the M6*16-10.9 hexagon flange bolts ① and ② with a 10mm socket.
2. Take out the fuel pipes ③, ④, and ⑤.

Remove fuel pipe

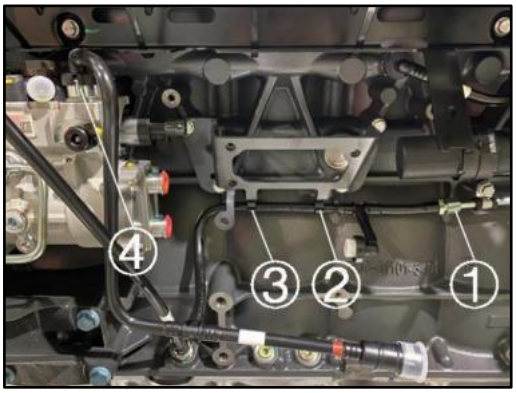

1. Use a 19mm open-end wrench to remove the fuel pipe nut ①, loosen the single-line pipe clamps ② and ③ of the fuel filter bracket, and remove the return pipe ④.

Remove the pump-to-rail fuel pipe

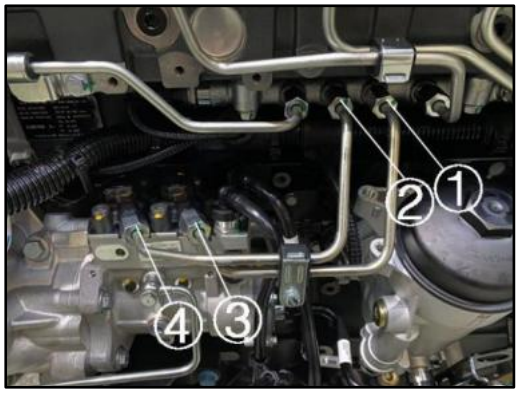

1. Use a 19mm open-end wrench to remove the rail-end nuts ① and ②, use a 21mm open-end wrench to remove the pump-end nuts ③ and ④, and remove the pump-to-rail fuel pipe.

Removal of the fuel pump

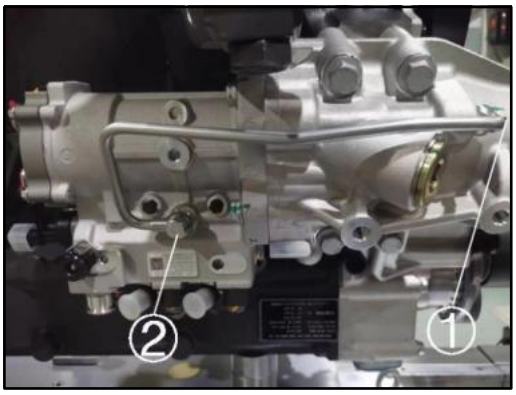

1. Use a 14mm socket wrench to remove the hollow bolts ① and ② at both ends of the oil pipe, and remove the lubrication oil pipe.

Removal of the fuel pump

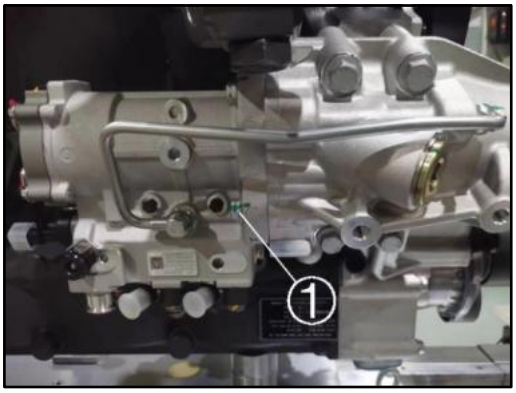

1. Use a 15mm socket wrench to remove the M10×35-10.9 hexagon flange bolts ① (4 pcs), and take out the fuel pump.

Installation of oil pump

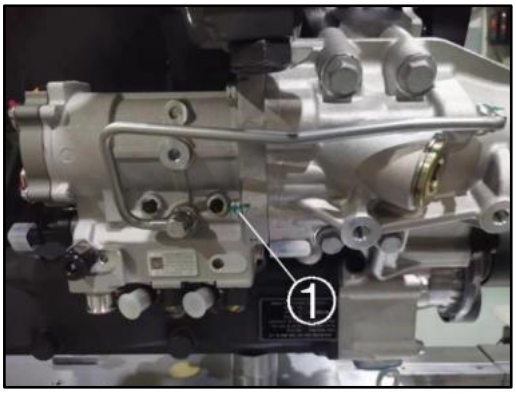

Installation steps

1. Position the high-pressure fuel pump, and use a 15 mm socket wrench to tighten the M10*35-10.9 hexagon flange bolts ① (4) to (65±6) Nm.

Installation of oil pump

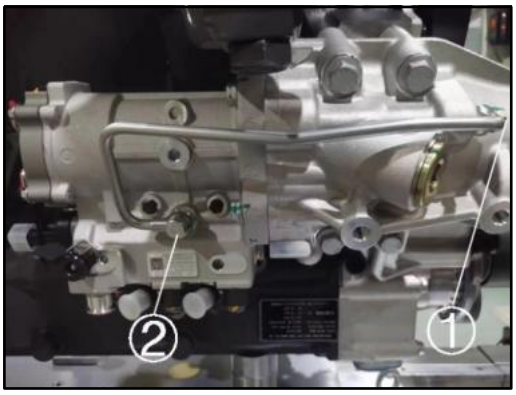

1. Position the lubrication oil pipe, and use a 14mm socket wrench to tighten the hollow bolts ① and ② at both ends of the oil pipe to a tightening torque of (20±2) N·m.

Note: The lubrication oil pipe is a disposable part.

Install the pump-to-rail fuel pipe

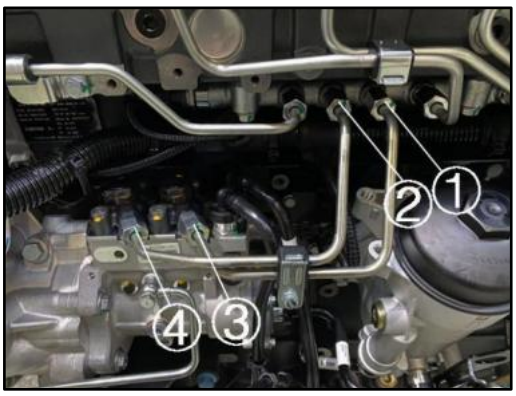

1. Use a 19mm open-end wrench to tighten the rail-end nuts ① and ②, use a 21mm open-end wrench to tighten the pump-end nuts ③ and ④ to a tightening torque of 10 N·m + 90°.

Note: The oil pipe is a disposable part.

Install the fuel pipe

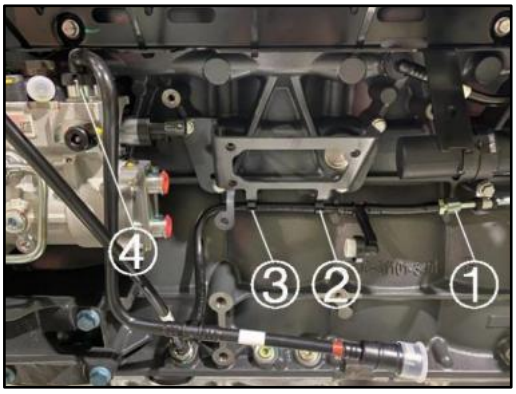

1. Use a 19mm open-end wrench to tighten the fuel pipe nut ① to a tightening torque of (20±2) N·m + (90±5)°, connect the fuel pipe ④; a click sound indicates proper assembly, and secure the fuel pipe using the fuel filter bracket single-line pipe clamps ② and ③.

Install the fuel pipe

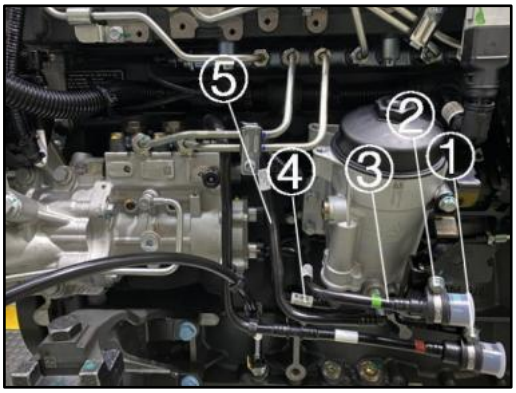

1. Connect the fuel pipes ③, ④, and ⑤; a click sound indicates proper engagement. Use a 10mm socket wrench to tighten the M6×15-10.9 hexagon flange bolts ① and ② to a tightening torque of (8±1) N·m.

Install the fuel pipe

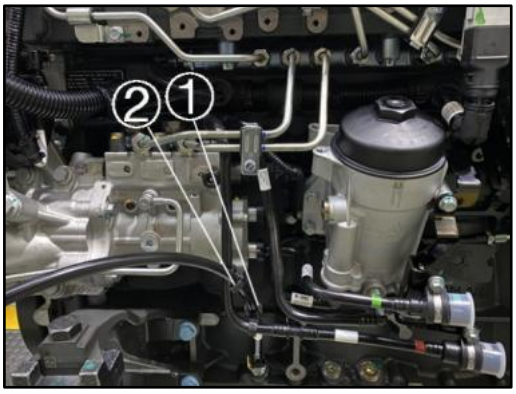

1. Secure the fuel pipe and oil dipstick using the dual-line pipe clamps ① and ②.

Remove the ECU controller

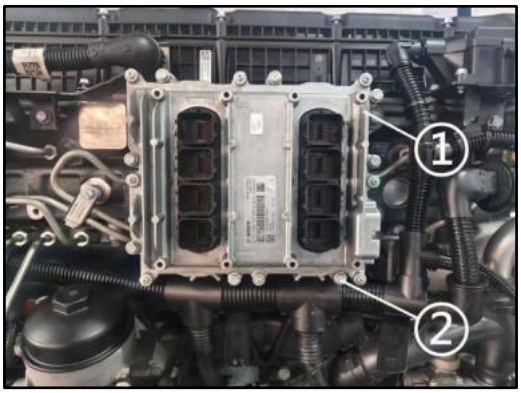

1. Use a 10mm socket wrench to remove the M6×35 hexagon flange bolts ② (8 pcs), and remove the ECU controller.

Remove the ECU controller bracket

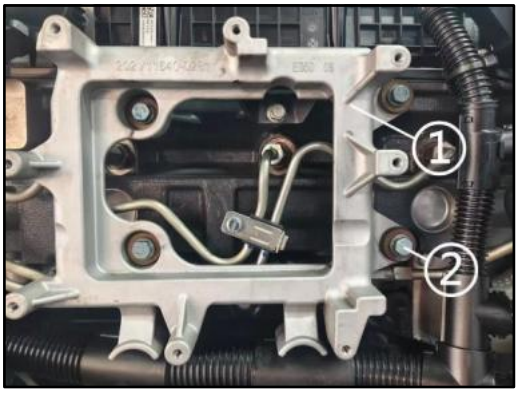

1. Use a 13mm socket wrench to remove the M8×40 hexagon flange bolts ② (4 pcs), and remove the ECU controller bracket.

Install the ECU controller bracket

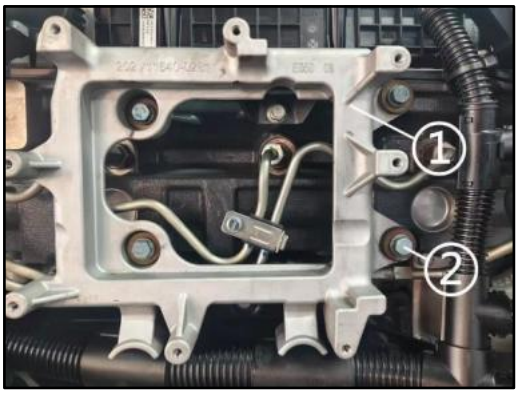

Installation steps

1. Position the ECU controller bracket ①, and use a 13mm socket wrench to tighten the M8*40 hexagon flange bolts ② (4 pcs) to a tightening torque of (35±3) N·m.

Install the ECU controller

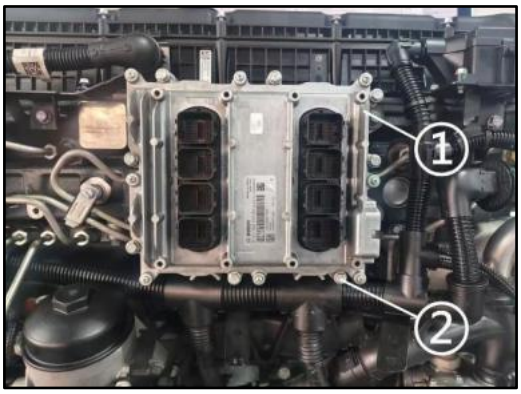

1. Install the ECU controller onto the bracket, and use a 10mm socket wrench to tighten the M6*35 hexagon flange bolts ② (8 pcs) to a tightening torque of (8±1) N·m.

Electrical accessories

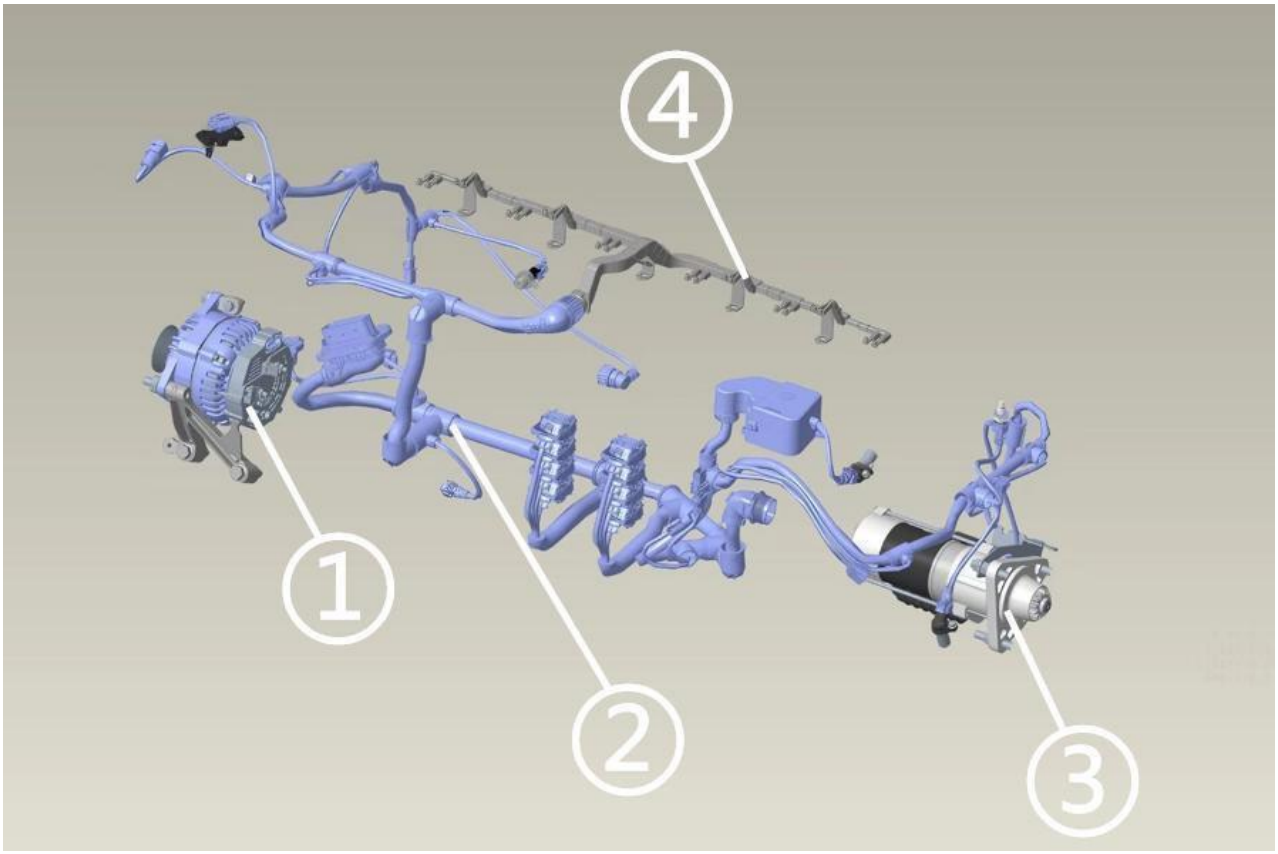

1. Alternator 2. Wire harness assembly 3. Starter 4. Injector wire harness

Removal of the starter

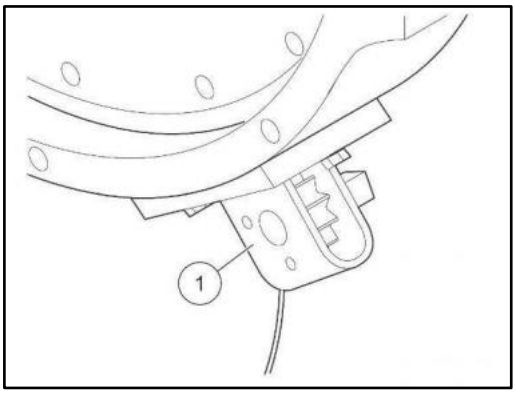

Removal steps

1. Install the engine crankshaft rotating device ① onto the flywheel casing.

Removal of the starter

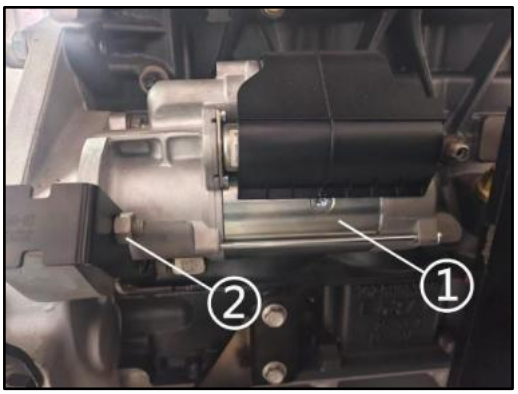

1. Use an 18mm socket wrench to remove the nuts ② (3 pcs), and take out the starter ①.

Installation of the starter

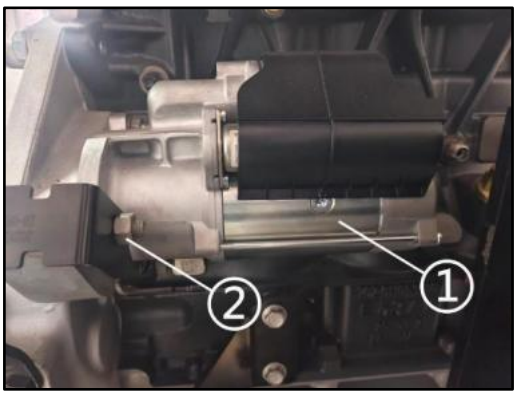

Installation steps

1. Install the starter ① onto the flywheel housing, and use an 18mm socket wrench to tighten the nuts ② (3 pcs) to a tightening torque of (110±11) N·m.

Installation of the starter

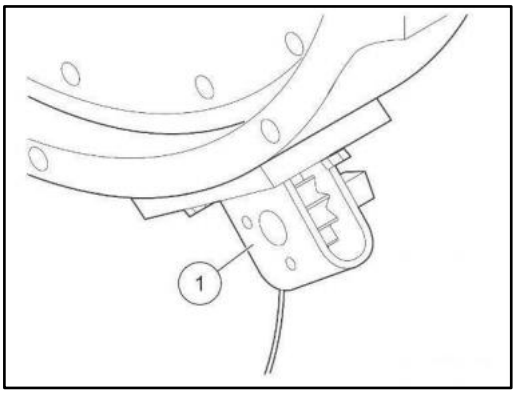

Installation steps

1. Remove the crankshaft rotating device ① from the flywheel casing.

Remove the ribbed belt

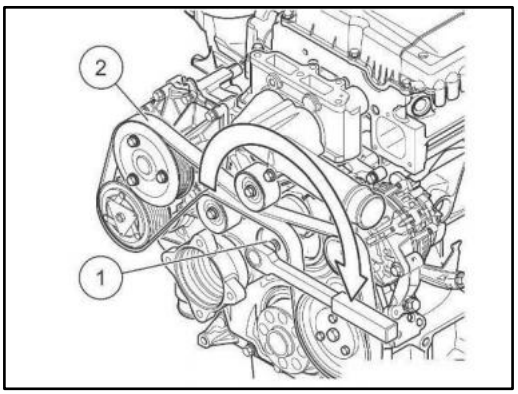

Removal steps

1. Rotate the tensioner ① clockwise to the stop, and remove the ribbed belt ②.

Remove the idler

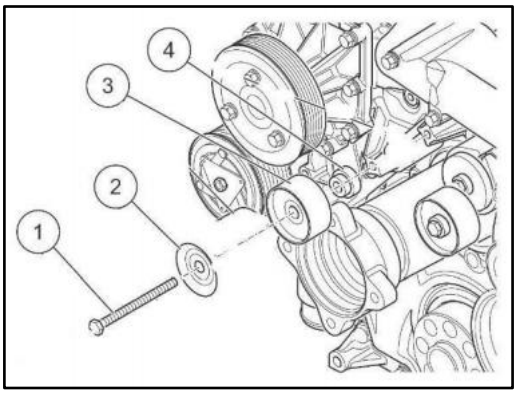

1. Remove the bolt ① (1 piece) with a 16mm socket, and take out the idler ③, spacer bushing ④ and gasket ②.

Remove the tension pulley

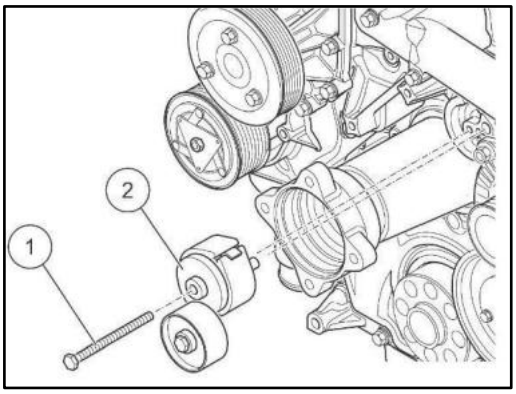

1. Remove the countersunk screw ① (1 piece) with a T50 hexagon socket wrench, and take out the tensioner ②.

Install the tension pulley

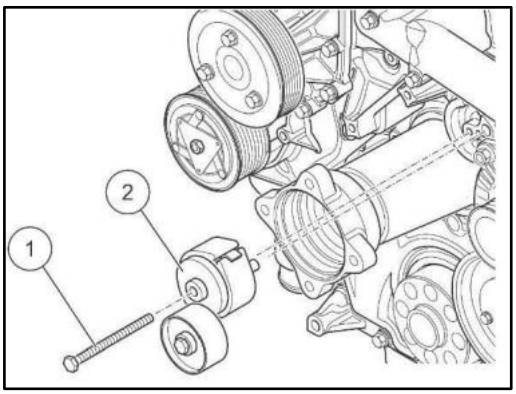

Installation steps

1. Fix the tensioner ②, and align the pin hole with the hole on the distribution housing.

2. Tighten the countersunk screw ① (1 piece) to (42~52) Nm with a T50 hexagon socket wrench.

Install idler gear

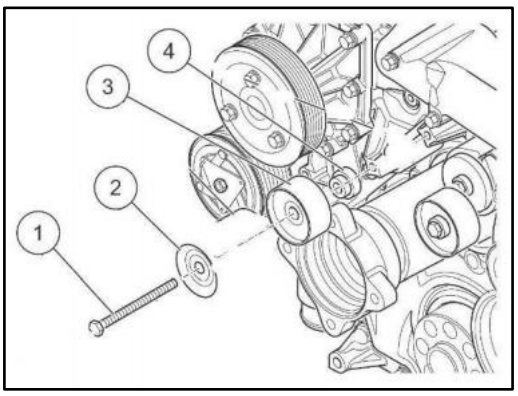

1. Use a 16mm socket wrench to tighten the idler ③, spacer bushing ④ and gasket ② bolt ① (1 piece) to (50~70) Nm.

Install the ribbed belt

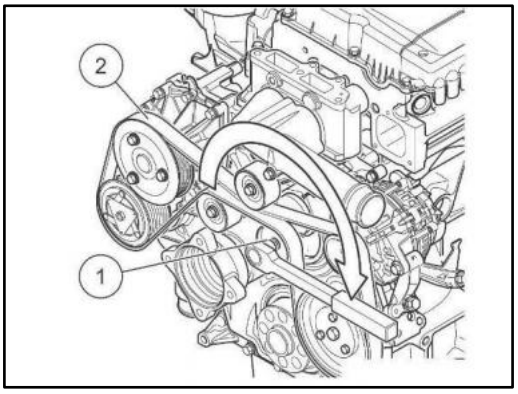

1. Rotate the tensioner ① clockwise to the stop, and install the ribbed belt ②.

Remove the ribbed belt

Removal steps

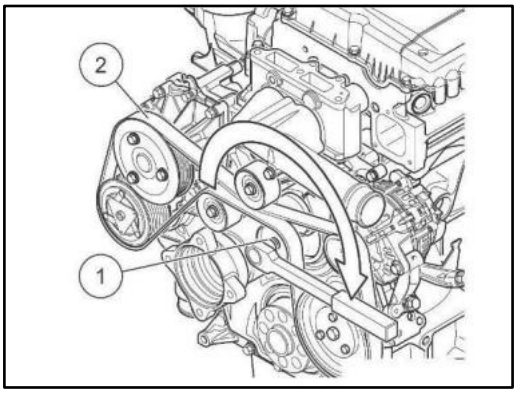

1. Rotate the tensioner ① clockwise to the stop, and take out the ribbed belt ②.

Removal of generator

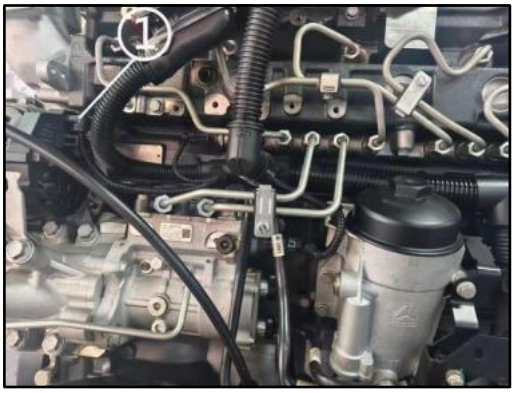

1. Unplug the alternator wire harness plug ①.

Removal of generator

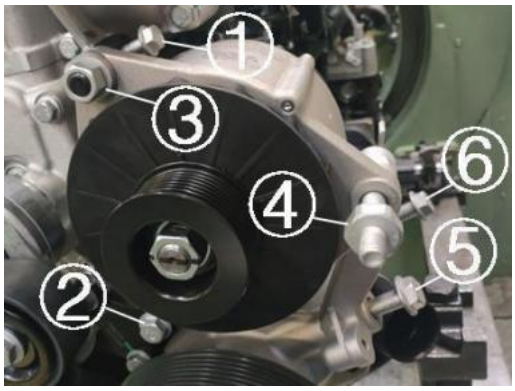

1. Remove the stud ④ with a 24mm socket, and remove the M12*60-10.9 hexagon flange bolts ⑤ and ⑥ with an 18mm socket.

Removal of generator

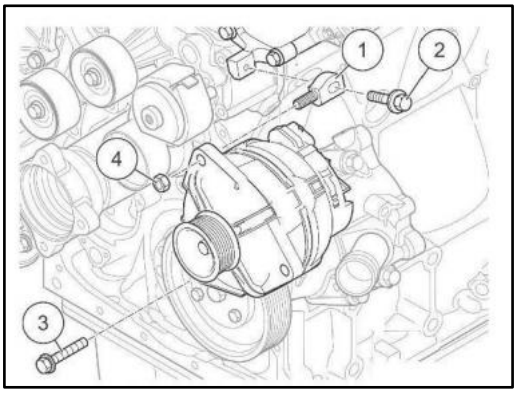

1. Remove the nut ④ with an 18mm socket wrench, remove the M10*110-10.9 hexagon flange bolt ③ (1 piece) with a 15mm socket wrench, and remove the M8*35-10.9 Hexagon flange bolt ② (1 piece) with an 13mm socket wrench to take out the alternator.

Installation of the generator

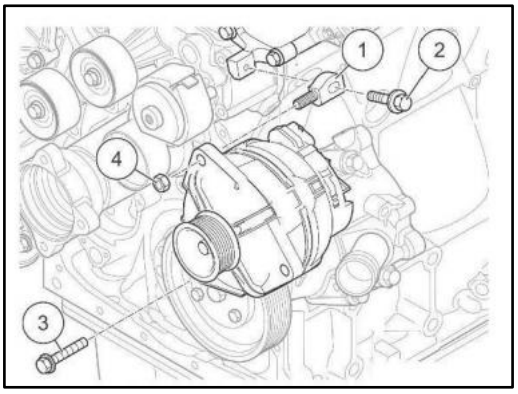

Installation steps

1. Install the bracket ①, and use a 13mm socket wrench to loosen the M8*35-10.9 hexagon flange bolt ② (1 piece).

2. Use a 15mm socket wrench to loosen the M10*110-10.9 hexagon flange bolt ③ (1 piece).

3. Use an 18mm socket wrench to loosen the nut ④.

Installation of the generator

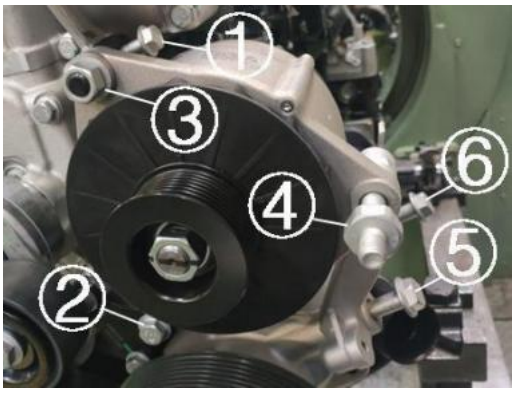

1. Use a 24mm socket to loosen the stud ④, and use an 18mm socket to loosen M12*60-10.9 hexagon flange bolts ⑤ and ⑥.

2. Tightening sequence: ② tighten to 10Nm, ③ tighten to 10 Nm, ① tighten to (30±3) Nm, ③ tighten (75±7) Nm, ② tighten to (65±6) Nm, ④ tighten to (81±8) Nm, and finally tighten ⑤ and ⑥ to (81± 8) Nm.

Installation of the generator

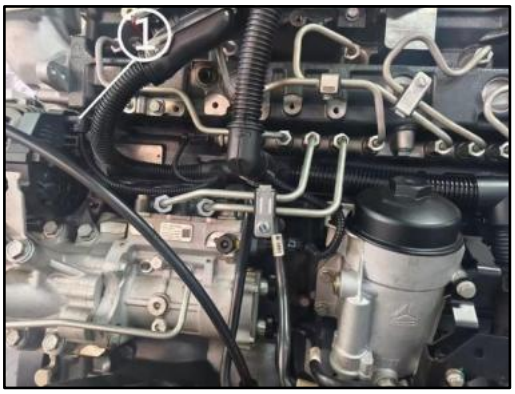

1. Connect the alternator wire harness plug ①

Install the ribbed belt

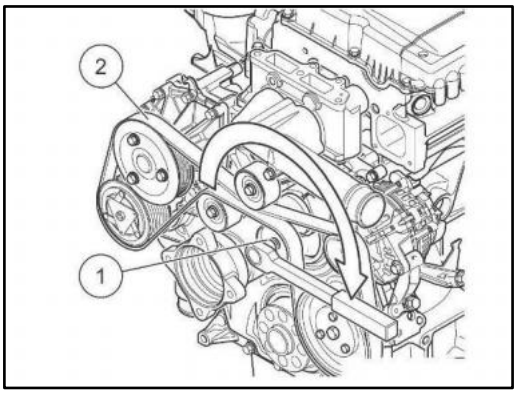

1. Rotate the tensioner ① clockwise to the stop, and install the ribbed belt ②.

Remove the ribbed belt

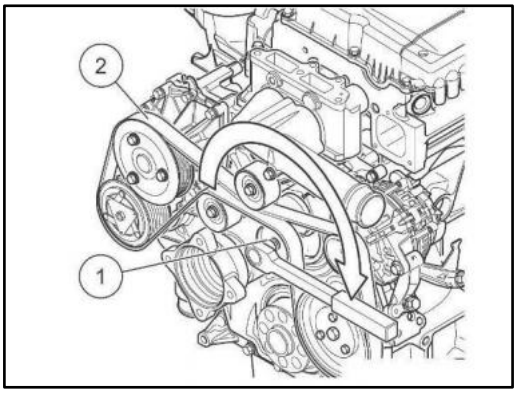

Removal steps

1. Rotate the tensioner ① clockwise to the stop, and take out the ribbed belt ②.

Removal of the A/C compressor

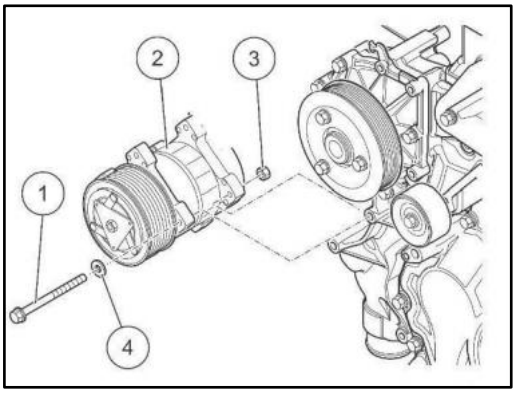

1. Use an H8 hexagon socket to remove the M10*130-10.9 hexagon socket bolts ① (2 pcs), and take out the air conditioning compressor ②.

Install the A/C compressor

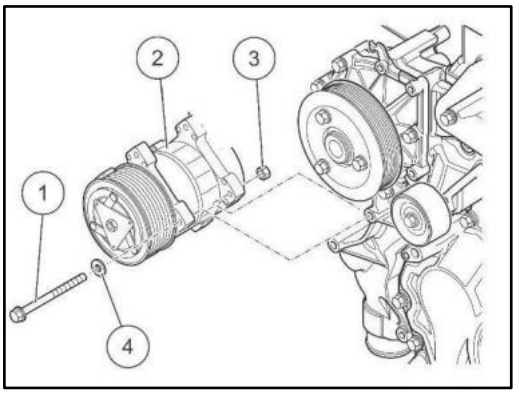

Install the ribbed belt

1. Use an H8 hexagon socket to secure the air conditioning compressor to the distribution housing with M10*130-10.9 hexagon socket bolts ① (2 pcs) and spacer washers ④, then use nuts ③ to tighten them to a tightening torque of (40±4) N·m.

Install the ribbed belt

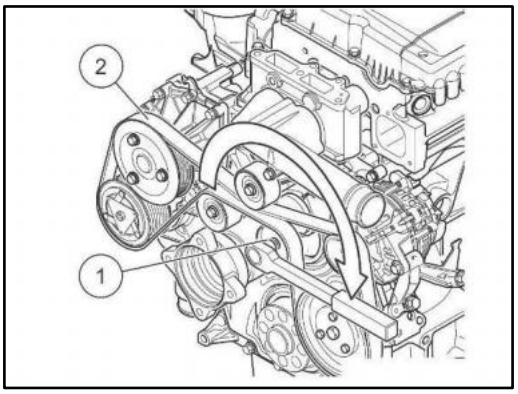

1. Rotate the tensioner ① clockwise to the stop.
2. Install the ribbed belt ②. ,

Remove the harness assembly

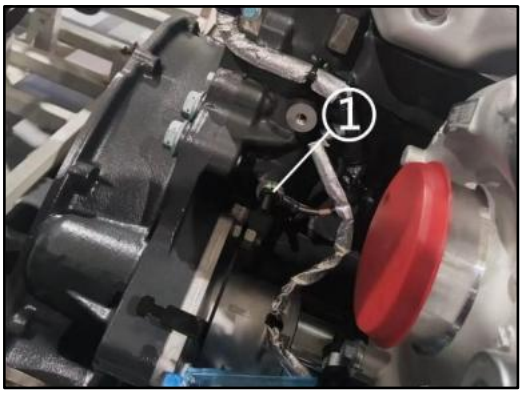

Removal steps

1. Use a 17mm socket wrench to remove the ground wire nut ①.

Remove the harness assembly

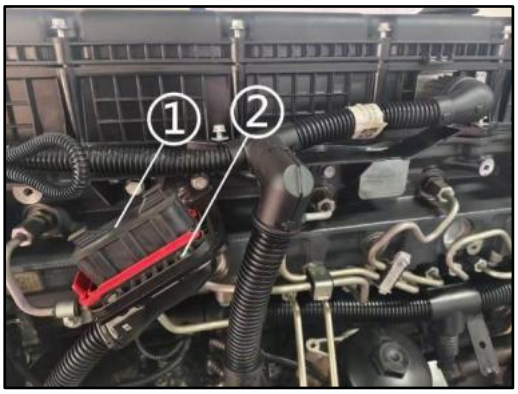

1. Use a 7mm socket wrench to remove the bolts ② (4 pcs), and take out the vehicle wire harness plug ①.

Remove the harness assembly



1. Use a special tool to loosen the nut ②, and take out the aftertreatment wire harness plug ①.
2. Unplug the camshaft speed sensor wire harness plug ③.

Remove the harness assembly

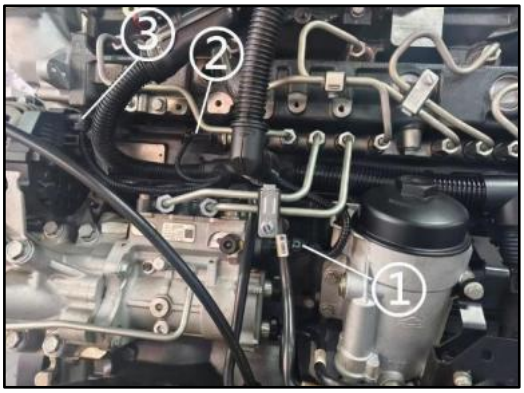

1. Unplug the oil pump metering unit harness connector ①, rail pressure sensor ②, and alternator connector ③.

Remove the harness assembly

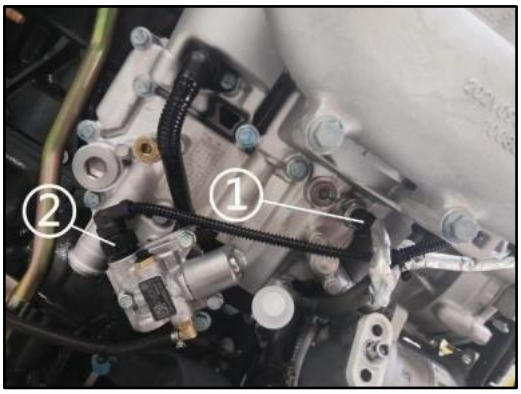

1. Unplug the oil pressure sensor ① and the proportional solenoid valve ②.

Remove the harness assembly



1. Unplug the crankshaft speed sensor ①.

Remove the harness assembly

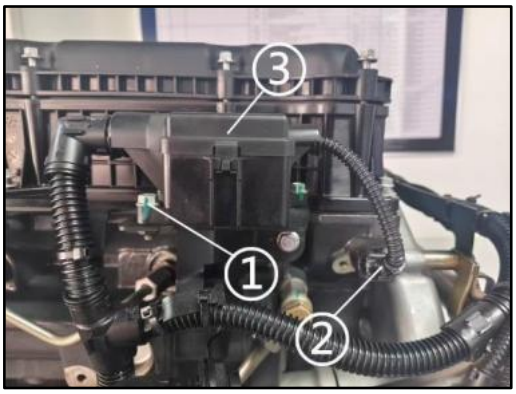

1. Remove the bolts ① (2 pcs) with a 10mm socket, and take out the aftertreatment relay ③.
2. Unplug the camshaft speed sensor ②.

Remove the harness assembly



1. Unplug the A/C compressor harness connector ①.

Remove the harness assembly

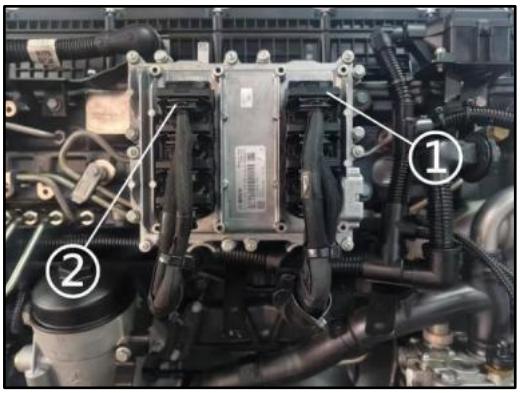

1. Unplug the ECU controller harness connectors ① and ② (8 pcs).

Remove the harness assembly

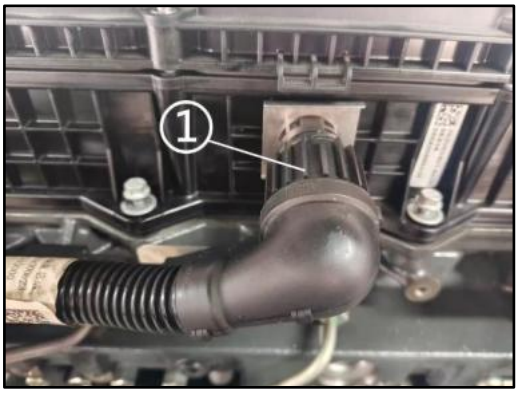

1. Rotate the harness connector ① counterclockwise, and unplug the injector harness connector.

Remove the harness assembly



1. Pull out the locking plate ① and push the plug ② into the cylinder head.

Remove the harness assembly

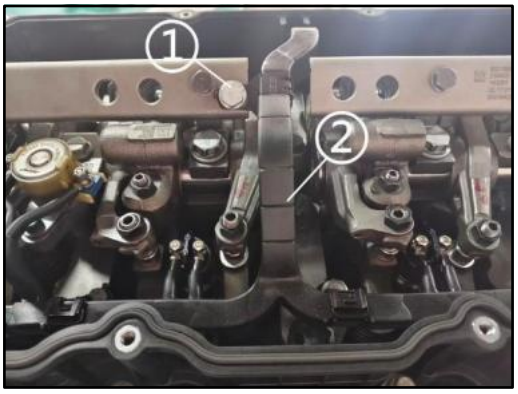

1. Remove the M8*15 hexagon flange bolts ① (6 pcs) with a 13mm socket wrench.

Remove the harness assembly

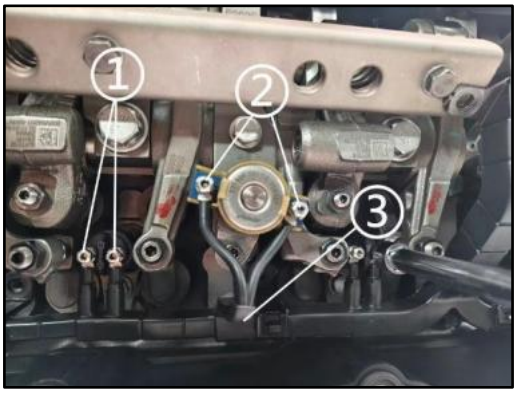

1. Use a 7mm socket to remove the injector harness nut ① and the DRB solenoid valve nut ②, then remove the harness ③.

Remove the harness assembly



1. Remove the harness assembly ①.

Install harness assembly

Installation steps



1. Install the harness assembly ① onto the harness bracket.

Install harness assembly



1. Install the injector harness ② in place, and lock it using the locking plate ①.

Install harness assembly

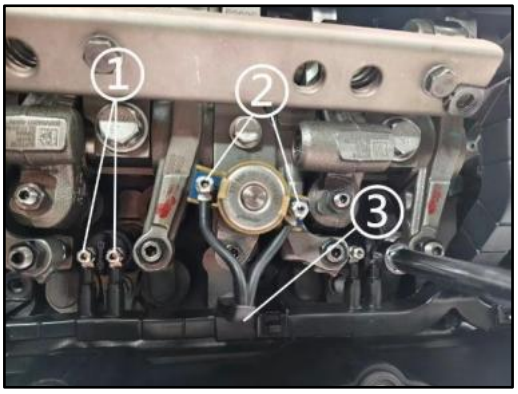

1. Hand-tighten the DRB solenoid valve harness nut ② and the injector harness nut ① by 2-3 threads, then use a 7mm socket to tighten them to a torque of 2 N·m.

Install harness assembly

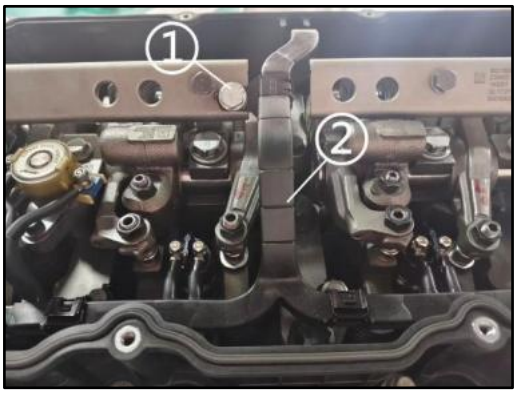

1. Use a 13mm socket wrench to tighten the M8*15 hexagon flange bolts ① (6 pcs) to a tightening torque of (35+3) N·m.

Install harness assembly

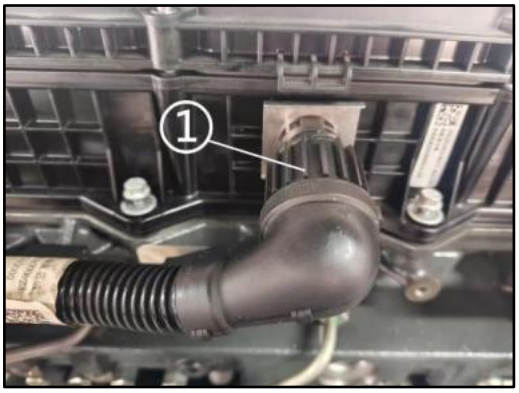

1. Rotate the harness plug ① clockwise into position.

Note: The plug must be aligned before insertion.

Install harness assembly

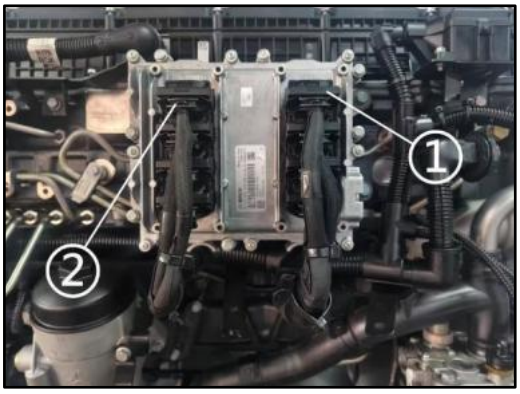

1. Connect the ECU controller harness connectors ① and ② (8 pcs).

Install harness assembly



1. Connect the A/C compressor harness connector ①.

Install harness assembly

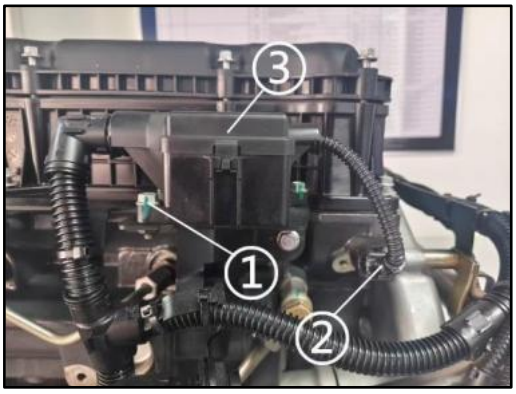

1. Install the aftertreatment relay ③ onto the bracket, and use a 10mm socket wrench to tighten the M6 hexagon flange bolts ① (2 pcs) to a tightening torque of 10 N·m.
2. Connect the camshaft speed sensor ②.

Install harness assembly

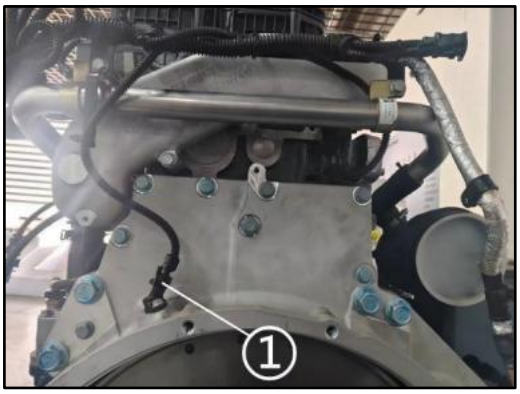

1. Connect the crankshaft speed sensor harness connector ①.

Install harness assembly

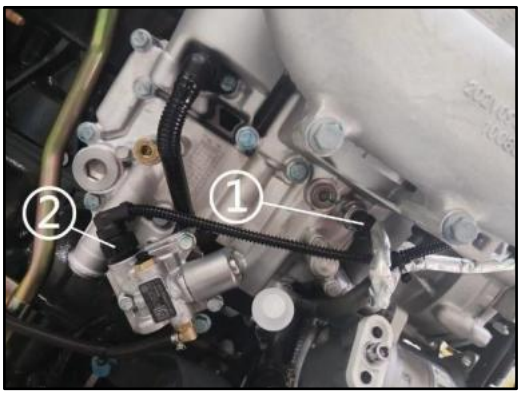

1. Connect the oil pressure sensor ① and the proportional solenoid valve ②.

Install harness assembly

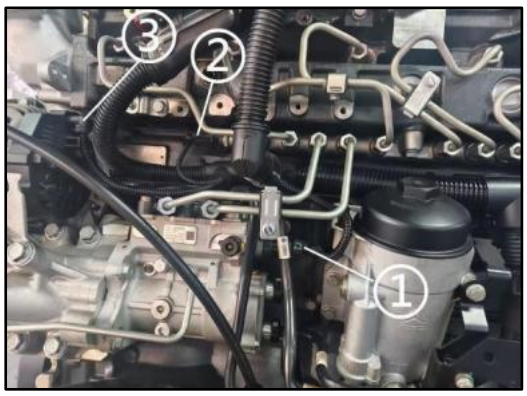

1. Connect the oil pump metering unit harness connector ①, rail pressure sensor ②, and alternator connector ③.

Install harness assembly



1. Install the aftertreatment harness connector ① onto the bracket, and use a special tool to tighten the nut ② to a tightening torque of 4.2 N·m.
2. Connect the camshaft speed sensor harness connector ③.

Install harness assembly

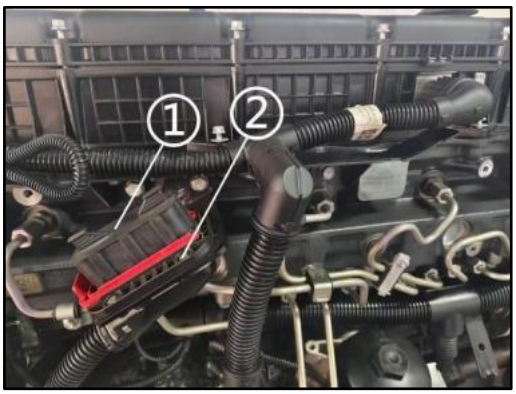

1. Install the vehicle harness connector ① onto the bracket, and use a 7mm socket to tighten the bolts ② (4 pcs) to a tightening torque of 5 N·m.

Install harness assembly

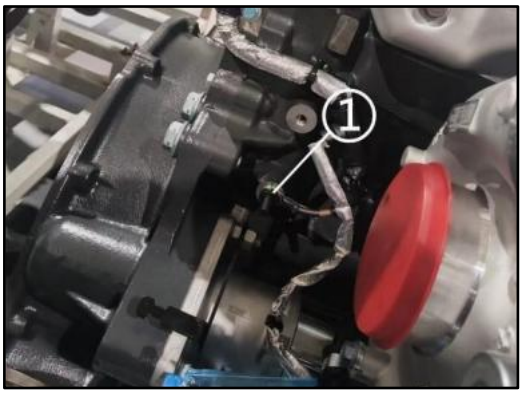

1. Use a 17mm socket wrench to tighten the ground wire nut ① to a tightening torque of 45 N·m.

Rear Power Take-off (PTO)

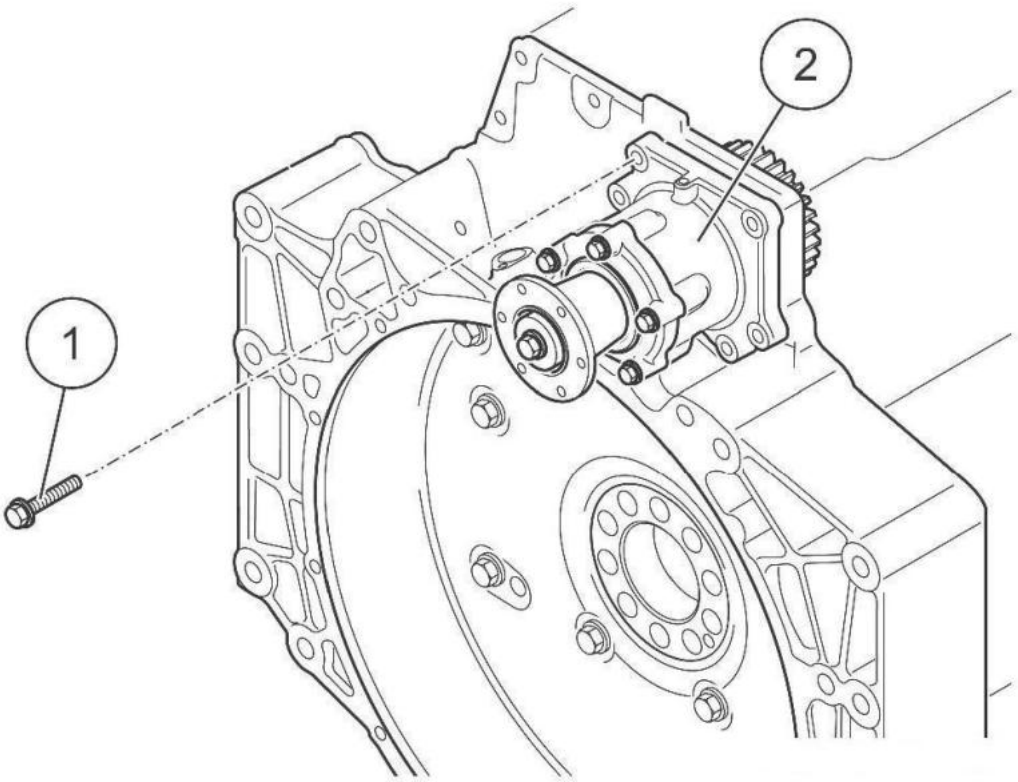

1. Bolt 2. Rear PTO assembly

PTO after removal

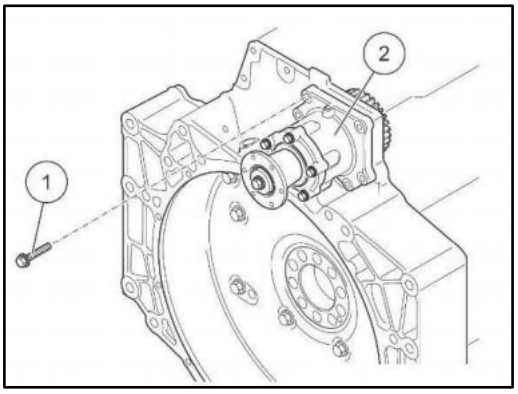

Removal steps

1. Use a 15mm socket wrench to remove the M10*60-10.9 hexagon flange bolts ① (5 pcs), and take out the rear PTO assembly ②.

PTO after installation

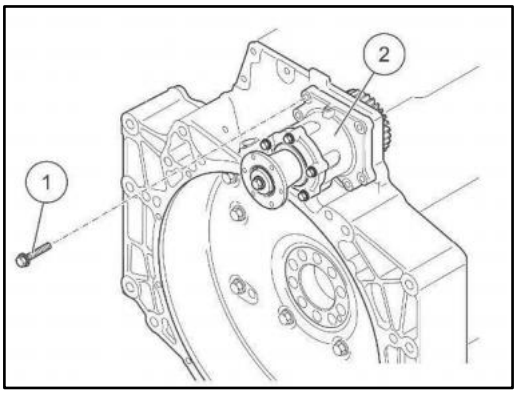

Installation steps

1. Apply Vaseline evenly to the mounting holes of the rear PTO, install the rear PTO in place, and use a 15mm socket wrench to tighten the M10*60-10.9 hexagon flange bolts ① (5 pcs) to (65±6) Nm.

Auxiliary material: Vaseline

Repair Instructions

TRAXON
Stage 1-2
Maintenance, Diagnosis, Component Replacement
Trucks

Copyright © ZF Friedrichshafen AG

This document is protected by copyright.
Complete or partial reproduction or distribution of this document is not permitted without the approval of ZF Friedrichshafen AG.
Infringements lead to civil and criminal prosecution.
This document is a translation of the German original.

1	**Preface**	7
1.1	Validity and field of application	7
1.2	Product designation	8
1.3	Information about the documentation	9
2	**Safety**	10
2.1	Signal words and symbols	10
2.2	General safety instructions	11
2.3	Product-specific safety instructions	13
2.3.1	ESD protection	13
2.3.2	Screw connection	14
3	**Notes on Repairs and Assembly**	15
3.1	General Notes	15
3.2	Cleaning the ZF product	15
3.3	Dismantling the ZF product	15
3.4	Assembling the ZF product	15
3.5	Cleaning parts	16
3.6	Reusing parts	16
3.7	Replacing parts	16
3.8	Reworking parts	17
3.9	Cleanliness specifications for transmissions with hydraulic components	17
4	**Technical Data**	19
4.1	Weight	19
4.2	Oil	19
4.2.1	Oil grade	19
4.2.2	Oil purity	20
4.2.3	Oil quantity	20
4.2.4	Oil filter	21
4.3	Type plate	21
4.3.1	Transmission type plate	21
4.3.2	INTARDER type plate	22
4.3.3	PTO type plate	22
6	**Tightening Torques**	23
7	**Workshop Equipment**	25
7.1	Special tools	25
7.2	Standard tools and fixtures	27
7.3	Operating supplies and auxiliary materials	28
8	**Maintenance**	29
8.1	Maintenance plan	29
8.2	Maintenance preparations	29
8.2.1	Completing back-up documentation	29

8.3	Checking wiring	29
8.4	Checking the venting	29
8.5	Checking leak tightness	30
8.6	Checking oil level	30
8.6.1	Checking transmission oil level	30
8.6.2	Checking oil level for version with INTARDER	31
8.7	Oil change interval	32
8.8	Oil change	32
8.8.1	Draining oil	32
8.8.2	Draining oil for the version with INTARDER	33
8.8.3	Replacing the oil filter at the INTARDER	33
8.8.4	Filling oil	35
8.8.5	Filling oil for version with INTARDER	36
8.9	Servicing the compressed air system	36
9	**Diagnosis**	37
9.1	ZF Testman	37
9.1.1	System scope	38
10	**Transport and Storage**	39
10.1	Transport	39
10.1.1	General transport instructions	39
10.1.2	Transporting with a crane	41
10.2	Storage	43
10.3	Corrosion protection and preservation	43
11	**Preparatory Activities**	44
11.1	Preparing ZF product	44
11.1.1	Completing back-up documentation	44
11.1.2	Bleeding the ConAct	44
11.1.3	Preparing for retrofitting of the oil/coolant heat exchanger	45
11.1.4	Preparing for retrofitting of the oil-air heat exchanger valve block	46
12	**Replacing components**	48
12.1	Replacing the transmission control unit	48
12.1.1	Removing the transmission control	48
12.1.2	Installing the transmission control	50
12.2	Replacing breather	52
12.2.1	Removing breather	52
12.2.2	Mounting breather	53
12.3	Replacing the Valve Block	53
12.3.1	Removing the valve block	53
12.3.2	Installing the valve block	55
12.4	Replace the sensor module	56
12.4.1	Removing the sensor module	56
12.4.2	Installing the sensor module	57

12.5	Replacing the selector actuator	59
12.5.1	Removing the selector actuator – model range 12	59
12.5.2	Installing the selector actuator – model range 12	60
12.5.3	Removing the selector actuator – model range 16	61
12.5.4	Installing the selector actuator – model range 16	63
12.6	Replacing the TRAXON cable for the transmission control unit	64
12.6.1	Removing the TRAXON cable	64
12.6.2	Installing the TRAXON cable	66
12.7	Replacing the speed sensor	68
12.7.1	Removing the speed sensor	68
12.7.2	Installing the speed sensor	69
12.8	Replacing the speedometer impulse sensor	70
12.8.1	Removing the impulse sensor – version without INTARDER	70
12.8.2	Installing the impulse sensor – version without INTARDER	71
12.8.3	Removing the impulse sensor – version with INTARDER	72
12.8.4	Installing the impulse sensor – version with INTARDER	73
12.9	Replacing the oil/coolant heat exchanger	74
12.9.1	Removing the oil/coolant heat exchanger	74
12.9.2	Installing the oil/coolant heat exchanger	75
12.10	Replacing the oil-air heat exchanger valve block	76
12.10.1	Removing the oil-air heat exchanger valve block	76
12.10.2	Installing the oil-air heat exchanger valve block	77
12.11	Replacing the cover for the PTO connection	79
12.11.1	Removing the cover for the PTO connection	79
12.11.2	Installing the cover for the PTO connection	80
12.12	Replacing the compressed air connecting nozzle	82
12.12.1	Removing the compressed air connecting nozzle	82
12.12.2	Installing the compressed air connecting nozzle	83
12.13	Replacing the ConAct	84
12.13.1	Removing the ConAct	84
12.13.2	Installing the ConAct	86
12.14	Replacing the output flange	88
12.14.1	Removing the output flange – version without INTARDER	88
12.14.2	Installing the output flange – version without INTARDER	89
12.14.3	Removing the output flange – version with INTARDER	89
12.14.4	Installing the output flange – version with INTARDER	90
13	**Inspections, Records**	91
14	**Initial Operation**	92
14.1	Before initial operation	92
14.2	Calibrating the inclination sensor	92
14.3	Initial operation conditions	92
15	**Annex**	93
15.1	List of abbreviations	93

15.2 Overview of revisions 93

1 Preface

In addition to the ZF documentation, observe the provisions of the vehicle manufacturer or the body manufacturer.

1.1 Validity and field of application

This documentation applies to the following ZF products:

- TRAXON, model range 12.1, direct drive
  - 12 TX 1410 TD, 12 TX 1610 TD, 12 TX 1810 TD, 12 TX 2010 TD, 12 TX 2210 TD
  - 12 TX 1411 TD, 12 TX 1611 TD, 12 TX 1811 TD, 12 TX 2011 TD, 12 TX 2211 TD
  - 12 TX 1415 TD, 12 TX 1615 TD, 12 TX 1815 TD, 12 TX 2015 TD, 12 TX 2215 TD
- TRAXON, model range 12.1, overdrive
  - 12 TX 1610 TO, 12 TX 1810 TO, 12 TX 2010 TO, 12 TX 2210 TO, 12 TX 2410 TO, 12 TX 2610 TO
  - 12 TX 1611 TO, 12 TX 1811 TO, 12 TX 2011 TO, 12 TX 2211 TO, 12 TX 2411 TO, 12 TX 2611 TO
  - 12 TX 1611 TO, 12 TX 1815 TO, 12 TX 2015 TO, 12 TX 2215 TO, 12 TX 2415 TO, 12 TX 2615 TO
- TRAXON, model range 12.2, direct drive
  - 12 TX 2420 TD, 12 TX 2620 TD, 12 TX 2820 TD
  - 12 TX 2421 TD, 12 TX 2621 TD, 12 TX 2821 TD
  - 12 TX 2425 TD, 12 TX 2625 TD, 12 TX 2825 TD
- TRAXON, model range 12.2, overdrive
  - 12 TX 2820 TO, 12 TX 3020 TO, 12 TX 3220 TO, 12 TX 3420 TO
  - 12 TX 2821 TO, 12 TX 3021 TO, 12 TX 3221 TO, 12 TX 3421 TO
  - 12 TX 2825 TO, 12 TX 3025 TO, 12 TX 3225 TO, 12 TX 3425 TO
- TRAXON, model range 16, direct drive
  - 16 TX 1640 TD, 16 TX 1840 TD, 16 TX 2040 TD, 16 TX 2240 TD, 16 TX 2440 TD, 16 TX 2640 TD, 16 TX 2840 TD
  - 16 TX 1641 TD, 16 TX 1841 TD, 16 TX 2041 TD, 16 TX 2241 TD, 16 TX 2441 TD, 16 TX 2641 TD, 16 TX 2841 TD
  - 16 TX 1645 TD, 16 TX 1845 TD, 16 TX 2045 TD, 16 TX 2245 TD, 16 TX 2445 TD, 16 TX 2645 TD, 16 TX 2845 TD
- TRAXON, model range 16, overdrive
  - 16 TX 1840 TO, 16 TX 2040 TO, 16 TX 2240 TO, 16 TX 2440 TO, 16 TX 2640 TO, 16 TX 3440 TO
  - 16 TX 1841 TO, 16 TX 2041 TO, 16 TX 2241 TO, 16 TX 2441 TO, 16 TX 2641 TO, 16 TX 3441 TO
  - 16 TX 1845 TO, 16 TX 2045 TO, 16 TX 2245 TO, 16 TX 2445 TO, 16 TX 2645 TO, 16 TX 3445 TO

Scope
This document serves as a technical guide for the ZF product to vehicle manufacturers, bodybuilders and employees of ZF Friedrichshafen AG. This document describes a ZF standard application. Customer-specific deviations must be agreed with ZF in writing.

1.2 Product designation

The product designation is composed of the following:

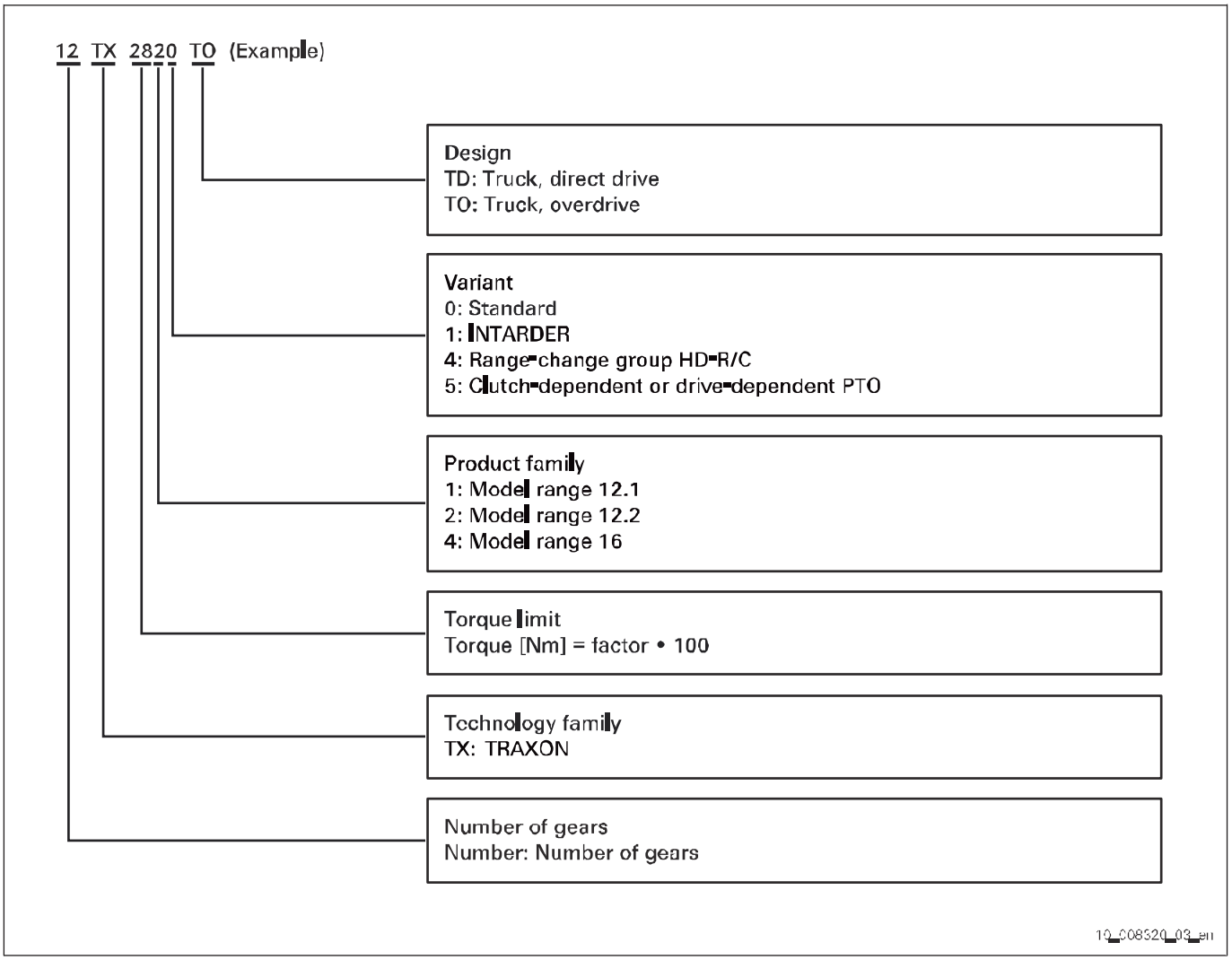

Fig. 1

In the event of a variant combination, the lower digit is used.

1.3 Information about the documentation

The following illustrations serve as examples and may deviate from the documentation's content.

Illustration of text and figure

- Number counting the respective work step (3)
- Number of the respective part in the figure (2)
- Item number of the respective part in the spare parts catalog (4)
- Figure number (1)

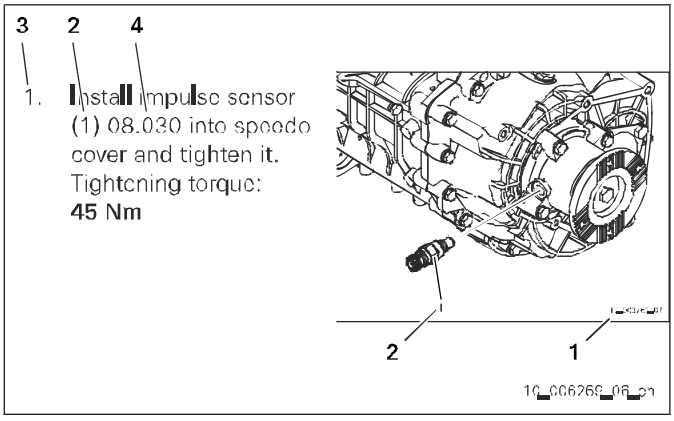

Fig. 2

Illustration of special tool

- Instruction (1)
- Special tools (2) used are listed at the beginning of an instruction (1).
- Designation of the special tool (3)
- Order no. of the special tool (4)

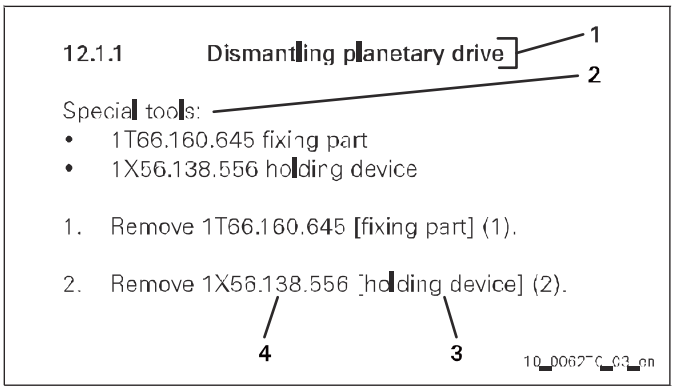

Fig. 3

Illustration of operating supplies and auxiliary materials

- Instruction (1)
- Operating supplies and auxiliary materials (2) used are listed at the beginning of an instruction (1).
- Manufacturer's designation of operating supplies and auxiliary materials (3)
- Order no. of operating supplies or auxiliary materials (4)

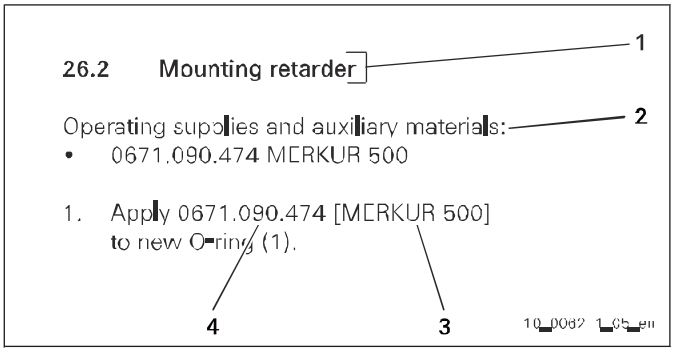

Fig. 4

2 Safety

2.1 Signal words and symbols

This document contains particularly highlighted safety instructions which are marked with one of the following signal words depending on the severity of the danger.

⚠ DANGER

DANGER
The signal word DANGER indicates a dangerous situation that, if not prevented, will lead to a severe injury or death.
⇨ Information as to how the danger can be prevented.

⚠ WARNING

WARNING
The signal word WARNING indicates a dangerous situation that, if not prevented, can lead to a severe injury or death.
⇨ Information as to how the danger can be prevented.

⚠ CAUTION

CAUTION
The signal word CAUTION indicates a dangerous situation that, if not prevented, can lead to a slight or moderate injury.
⇨ Information as to how the danger can be prevented.

NOTICE

The signal word NOTICE indicates a situation that, if not prevented, can lead to property damage.
⇨ Information as to how the property damage can be prevented.

The following symbols are additionally used:

⚠ This symbol refers to additional, safety-relevant information.

ⓘ This symbol indicates information concerning special workflows, methods, application of aids, etc.

2.2 General safety instructions

Read all safety instructions and information. Failure to comply with safety instructions and information may lead to property damage, serious injuries or death.

Intended use
The ZF product is exclusively intended for the application as defined in the contract and as agreed on the time of delivery. Any other or extended form of use does not comply with this definition of intended use. The intended use includes compliance with this documentation and other applicable documents, in order to avoid malfunctions and damage in operation.

The ZF product is designed and produced in line with state-of-the-art technology. The ZF product in its delivery status is safe to operate. However, the ZF product may pose dangers if improperly used by unauthorized, untrained and uninstructed staff or if not used according to its intended use.

Figures might deviate from the ZF product and are not drawn to scale. No conclusions can be drawn with regard to size and weight.

Installation, commissioning, maintenance and repair
Perform assembly, commissioning, maintenance and repair work exclusively according to this documentation and other applicable documents.

Observe the following points:

- Employ authorized, trained and instructed staff.
- Observe technical provisions.
- Only use genuine ZF spare parts.
- Only use genuine ZF accessories.
- Only use genuine ZF special tools.
- Unauthorized changes and modifications lead to the expiry of the operator's license, warranty or guarantee.

In case of damage, contact ZF and have the following information on the product ready:

- Type
- Parts list [BoM] number
- Serial number
- Operating hours
- Description of damage

Observe safety instructions, valid safety regulations and legal conditions to prevent malfunctions and damage.

The country-specific safety regulations, accident prevention regulations and environmental protection provisions apply additionally.

Wear safety-relevant workwear for all work. Depending on the work, also wear personal protective equipment.

After completing the work, check correct function and functional security.

Handling of ZF product

Unauthorized changes and modifications might impair functional security. Changes, modifications and applications are only permissible upon written approval by ZF Friedrichshafen AG.

Observe the following when working on the ZF product:

- Secure workspace.
- Only carry out work at the unit when in a voltage-free state.
- Protect unit against being started accidentally. Attach instruction plate where it is clearly visible.
- Perform work when engine is switched off.
- Protect engine against being started accidentally. Attach instruction plate where it is clearly visible.
- Do not stand beneath a suspended load.
- Do not work on a suspended load.
- Only use permitted means of transport and lifting devices with sufficient load-bearing capacity.
- Close open tubings and hoses and avoid damage.
- Observe tightening torques.
- Protect cables against mechanical damage.

Noise

Noise might cause irreversible damage to hearing.

The perception of acoustic signals, warning calls or sounds warning of impending danger is impaired by noise.

Observe the following when working on the ZF product:

- Avoid noise.
- Wear ear protection.

Operating supplies and aids

Operating supplies and aids might cause permanent damage to health and environmental damage.

Observe the following when selecting operating supplies and aids:

- Health risks
- Environmental compatibility
- Material safety data sheets

Observe the following when handling operating supplies and aids:

- Store operating supplies and aids in suitable and correctly labeled containers.
- Seek medical help in case of injuries due to hot, cold or caustic operating supplies or aids.

Observe the following to protect the environment:

- Collect leaking operating supplies and aids in sufficiently large containers.
- Observe disposal regulations.
- Observe material safety data sheets.

2.3 Product-specific safety instructions

2.3.1 ESD protection

Electrostatic discharge (ESD) might cause damage at electronic components due to overvoltage.



Fig. 5

Electrostatic discharge sensitive devices are marked with this symbol.



Fig. 6

Products protecting against ESD, e.g., electrically conductive safety footwear, protective coverings, clothing, mats, trolleys, etc., are marked with this symbol.

Protect components from damage due to electrostatic discharge (ESD):

- Do not touch contacts.
- Wear conductive workwear.
- Ground workplace.
- Use ESD transport protection.
- Use ESD protective packaging.
- Use ESD transport protection and ESD protective packaging when transporting electronic components.

Further information:

- DIN EN 61340-5-1/2/3
- VDE 0300
- IEC/TR 61340
- ANSI/ESD standards

2.3.2 Screw connection

The torque wrenches must be calibrated to DIN EN ISO 6789.

3 Notes on Repairs and Assembly

3.1 General Notes

- Please read this documentation prior to starting repair or assembly work.
- Prior to starting repair or assembly work, please find out whether ZF Service Information on the ZF product is available. ZF Service Information may contain tests or supplements to the product or to repair processes, which may not be included in this documentation. The ZF-Service Information is available at all ZF Services Partner or in the ZF-ServiceLine.
- In case of doubt, always contact the relevant expert departments of ZF Aftermarket.
- Please ensure that all work on the ZF product is performed expertly and under clean conditions.
- Use the specified special tools and equipment intended for the working procedures described.
- Please perform all work according to the working procedure described.
- Cover opened ZF products to prevent entry of foreign matter.
- Cover parts that have been removed and that are reusable and protect them against dirt and damage.
- After completion of work and inspections, specialized staff must ensure that the ZF product is again functioning perfectly and is safe to operate.

3.2 Cleaning the ZF product

Clean the ZF product with an appropriate cleaning agent prior to repair or assembly works.

NOTICE

Possible damage to ZF product due to water infiltration.

⇨ Be careful when using a pressure washer on the ZF product.

3.3 Dismantling the ZF product

- To avoid mixing up parts, the parts must be clearly assigned to the disassembled ZF product. In particular, this applies to gear parts, reusable spacer washers or shims, electronic components, etc.
- Assemblies which must not be disassembled or are only available as spare parts assembly are described accordingly. Please refer to the spare parts catalog for the ZF product.
- Inspect the parts during disassembly in order to find a potential cause of damage.

3.4 Assembling the ZF product

Assemble the ZF product at a clean workplace. The order of work steps, configuration data, and tightening torques must be retained. Use the special tools specified in the work steps.

Bearings

The provisions for assembly of the bearings are described in the respective work step. Each bearing integrated must be lubricated with operating oil after assembly.

Sealing compound
Sealing compound is only to be used when described as such in the work step *(refer to section Operating supplies and auxiliary materials)*. Please observe the manufacturer guidelines and processing instructions. Apply the sealing compound thinly and evenly. Keep oil ducts and oil bores free of sealing compound. When assembling the parts, no sealing compound must enter the oil ducts or oil bores.

Retaining agents
Retaining agents are only to be used when described as such in the work step *(refer to section Operating supplies and auxiliary materials)*. Please observe the manufacturer guidelines and processing instructions.

Oil
Fill the ZF product with oil before operation. For the procedure and approved oil grades, refer to the document valid for the ZF product, the type plate, and/or the latest List of Lubricants TE-ML. These documents are available at all ZF Services Partner and here www.zf.com.

3.5 Cleaning parts

- Clean all reusable parts.
- Clean lined clutch disks with a lint-free cloth only.
- Remove sealing compound residues on sealing faces or retaining agent residues, e.g., in tapped holes or on splines.
- Clean joining surfaces.
- Clean blind holes and blind hole threads.
- Lubricating bores, oil bores, oil ducts, bores for oil press fits and lubricating grooves must be free from dirt, preservatives and foreign matter. Check for free passage.
- Hose assemblies, tubes and joining elements must be free from dirt, oil and damage. Clean dirty or oily parts. Check for free passage. Replace damaged parts.
- Clean all cavities and reliefs.
- Remove preservatives from new parts.

3.6 Reusing parts

Authorized, specialized staff assess whether parts can be reused. Replace parts

- if they are damaged
- if they are worn, e. g. bearings, multidisks, thrust washers, etc.
- if they have a permanent deformation
- if they have been overheated during operation or during disassembly.

Only replace with original ZF parts or ZF-approved parts. Please refer to the spare parts catalog for the ZF product.

3.7 Replacing parts

The following parts must always be replaced:

- Bolts with reduced shank and seals

- Single-use parts
- Sealing rings
- Safety plates
- Shaft sealing rings

Only replace with original ZF parts or ZF-approved parts. Please refer to the spare parts catalog for the ZF product.

3.8 Reworking parts

Specialized staff assess whether parts need to be reworked.

Minor damage on reusable components can be removed and reworked with suitable special tools if the component's function is not impaired.

Minor damage includes:

- Indentation marks on sealing faces
- Score marks or burrs caused by the disassembly of the ZF product
- Fretting corrosion
- Paint and corrosion damage

If rework is needed on spacer washers or shims because of clearance settings, ensure that the reworked surface is level with the starting face and has the same surface quality.

Debur all edges that can cause chip formation during the assembly process or represent a risk of injury for the specialized staff. Remove burrs or other similar instances of unevenness.

3.9 Cleanliness specifications for transmissions with hydraulic components

Ensure cleanliness when performing repair and assembly works at hydraulic systems. This applies to the following areas in particular:

- hydraulic shift control unit,
- oil pump,
- oil filters (pressure filters),
- oil supply,
- valve housing, and
- oil feed flange.

NOTICE

Dirt particles in the hydraulic system may cause malfunctions.

↳ Ensure cleanliness when performing repair and assembly works.

The following requirements must be observed for the work process and the workshop equipment:

- Install separate cleaning processes for outer transmission parts and for parts of the hydraulic system.

- Avoid using mechanical stroke and blow processes. In case it cannot be avoided: Use impact adapter with large stroke/impact face.
- Parts made of Fe metals must be demagnetized.
- Only use cleaning cloths which do not fray.
- When applying operating supplies and auxiliary materials, only use high-quality, wear-resistant brushes whose bristles do not fall out (e.g. silicone brushes).
- Use operating supplies and auxiliary materials with the specified purity only (e.g. lubricants, sealing compounds, compressed air for inspection processes, etc.).
- Cover operating supplies and auxiliary materials before and after use.
- Store and transport ready-to-install components and assembly groups when properly covered.
- Fixtures must be designed and used in such a way that mechanical damage of the part or the ZF product is excluded and the fixture does not suffer from excessive wear.
- Avoid the utilization of easily distributable auxiliary materials in assembly (e.g. wood, Styrofoam, fiber plates, waxed paper).
- Chip-cutting machining and the blowing out of parts with compressed air has to be performed in a separate room and must not be performed in the assembly area.

Observe the following specifications for the workshop equipment:

- Design support surfaces for parts and tools in such a way that no deposits may accumulate (e.g. grate, perforated sheet metal).
- The work surfaces must be abrasion-proof and easy to clean (e. g. V4A sheets with rubber pads).
- If possible, make sure that work surfaces do not have any inaccessible corners and recesses.
- The workshop equipment (cabins, racks, workbenches, etc.) and its respective arrangement in the room must always be designed in such a way that proper cleaning of the room and floor is possible.
- It must be possible to properly clean the floor (e.g. through abrasion-proof sealing).
- Vacuum the floor regularly – do not sweep!
- Regularly wet-clean the floor.

4 Technical Data

4.1 Weight

Model range	Weight [kg] ±3% Transmission without oil	Weight [kg] ±3% Transmission filled with oil	Weight [kg] ±3% with INTARDER, transmission without oil	Weight [kg] ±3% with INTARDER, transmission filled with oil
12.1	253	264	335	355
12.2	265	279	347	369
16	290	303	372	394

Tab. 1 Transmission weight[1)]

PTOs incl. add-on components	Note	Approx. weight [kg] [2)]
NH/1	Design b	8
	Design c	6
NH/4	Design b	12
	Design c	11
N TX/10	Design b	20
	Design c	18
	Design b + b	28
	Design c + c	25
	Design b + c	26
NH/PL	Without pump	5
	With pump 8604	10
	With pump 8605	14

Tab. 2 PTO weight

The transmission's center of gravity is indicated in the customer-specific installation drawing.

4.2 Oil

4.2.1 Oil grade

NOTICE

Damage to ZF product due to incorrect oil possible.

⇨ Only use oils listed in the valid ZF List of Lubricants.

Observe the information on the type plate.

Approved oils and their material safety data sheets which are listed in the ZF List of Lubricants, e.g. TE-ML 02, are binding.

1) ±3% (without peripherals, PTOs, clutch)

2) Values are rounded; deviations are possible depending on the parts list [BoM].

The latest ZF List of Lubricants can be obtained from all ZF Service Centers and viewed at www.zf.com.

The transmission is supplied filled with ZF-Ecofluid M as a standard.

ZF recommendation: Also use ZF-Ecofluid M as service oil.

4.2.2 Oil purity

Oil purity essentially influences the product's service life.

The oil must not contain any visible solid impurities.

Please observe the following for the initial fill by the vehicle manufacturer and for oil changes:

- Please use oil that corresponds to the information on the type plate, e.g., TE-ML 02.
- Maximum water content in the oil: 400 ppm (test method ASTM D 6304, procedure C, 120°C)
- Maximum water content in used oil: 750 ppm.

4.2.3 Oil quantity

The quantities specified are reference values. The oil quantity after the oil level check is decisive. Observe the information on the type plate.

Model range	Oil quantity in liters (approx.)	
	After an oil change or an oil fill at the vehicle manufacturer	After repairs (dry transmission)
12.1	11	12.5
12.2	12	13.5
16	13	14.5

Tab. 3 Transmissions without INTARDER

Model range	Oil quantity in liters (approx.)	
	After an oil change or an oil fill at the vehicle manufacturer	After repairs (dry transmission)
12.1	19	22.5
12.2	19	23.5
16	20.5	24.5

Tab. 4 Transmission with INTARDER

The quantities specified refer to the basic transmission without vehicle-specific add-ons (e.g. heat exchanger, supply and return lines, ...).

The transmission oil fill quantity increases when a PTO and/or a heat exchanger is attached to the transmission. The required oil quantities are indicated in the installation drawings. If there is no corresponding information in the installation drawing, the values in the following table apply.

PTO	Note	Oil quantity in liters (approx.)	
		after an oil change	for initial fill after repair
N1	in addition to the transmission oil quantity	–	–
N4	in addition to the transmission oil quantity	0.5	0.5
N10	in addition to the transmission oil quantity	1.0	1.0

Tab. 5 PTO oil quantity

4.2.4 Oil filter

Only use original ZF-oil filters.

4.3 Type plate

Position of type plates

- Transmission type plate: on the side of the transmission
- INTARDER type plate: on the side of the INTARDER
- Electronic control unit type plate on the INTARDER: on the control unit
- PTO type plate: on the PTO

4.3.1 Transmission type plate

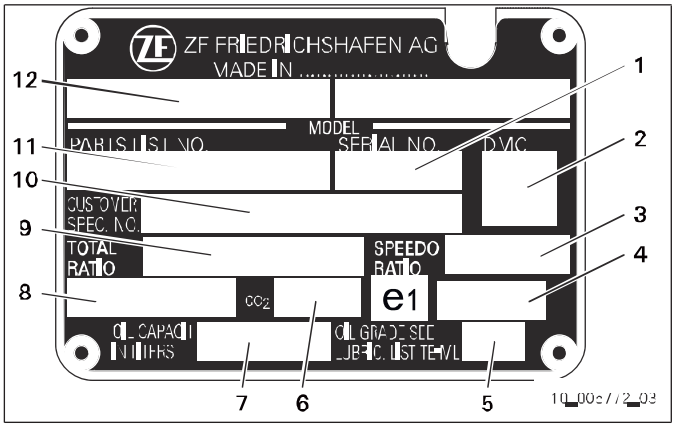

Fig. 7 Transmission type plate

1 Transmission serial number
2 Data Matrix Code
3 Speedometer ratio (impulses/revolutions)
4 CO_2 certificate
5 Number of List of Lubricants
6 CO_2 family
7 Approx. oil quantity for initial fill
8 PTO type
9 Transmission ratio
10 Customer spec. number, if known to ZF
11 Transmission parts list (BoM) number
12 Product designation and transmission type with number of gears

The following data should be quoted when making inquiries or undertaking repairs: 1, 11, 12

4.3.2 INTARDER type plate

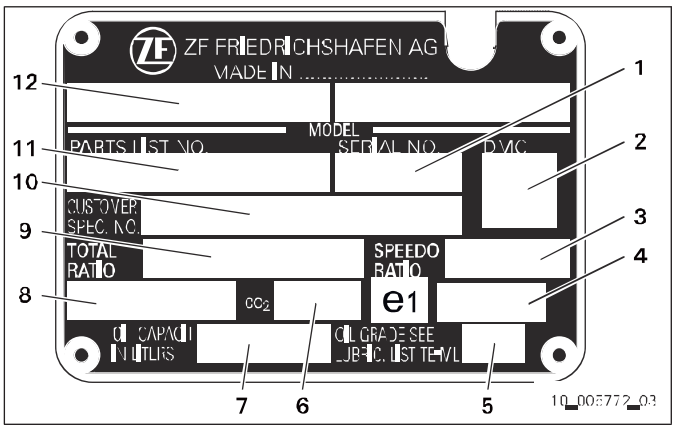

Fig. 8 INTARDER type plate

1 INTARDER serial number
2 Data matrix code
3 Speedometer ratio (impulses/revolutions)
4 CO_2 certificate
5 Number of List of Lubricants
6 CO_2 family
7 Approx. oil quantity for initial fill
8 PTO type
9 INTARDER ratio
10 Customer spec. number, if known to ZF
11 INTARDER parts list [BoM] number
12 Product designation and type of INTARDER

The following data should be quoted when making inquiries or undertaking repairs: 1, 9, 11, 12

4.3.3 PTO type plate

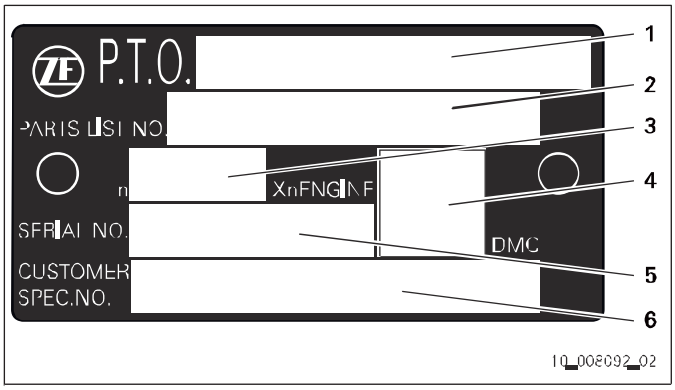

Fig. 9 PTO type plate

1 PTO type
2 PTO parts list [BoM] number
3 PTO speed factor
4 Data Matrix Code
5 PTO serial number
6 Customer spec. number, if known to ZF

The following data should be quoted when making inquiries or undertaking repairs: 1, 2, 5

6 Tightening Torques

Designation	Tightening torque	Measuring instrument	Comment Chapter/Section
M24x1.5 screw plug *01.010*	**60 Nm**	Torque wrench	• Checking transmission oil level, page 30
M24x1.5 screw plug *01.010*	**60 Nm**	Torque wrench	• Checking oil level for version with INTARDER, page 31
M24x1.5 screw plug *31.150*	**60 Nm**	Torque wrench	• Draining oil, page 32
M24x1.5 screw plug *01.050, 31.150*	**60 Nm**	Torque wrench	• Draining oil for the version with INTARDER, page 33
M8x20 hexagon screw *01.210, 01.220*	**23 Nm**	Torque wrench	• Replacing the oil filter at the INTARDER, page 33
M24x1.5 screw plug *01.010*	**60 Nm**	Torque wrench	• Filling oil, page 35
M24x1.5 screw plug *01.010*	**60 Nm**	Torque wrench	• Filling oil for version with INTARDER, page 36
Breather screw *27.010/035*	**10 Nm**	Torque wrench	• Manually bleeding the ConAct, page 45
Screw plug *27.010/035*	**35 Nm**	Torque wrench	• Manually bleeding the ConAct, page 45
Hexagon screw *27.100-27.380*	**29 Nm**	Torque wrench	• Installing the transmission control, page 50
Breather *27.050*	**10 Nm**	Torque wrench	• Mounting breather, page 53
M8 torx screw *27.010/025*	**23 Nm**	Torque wrench	• Installing the valve block, page 55
Torx screw *27.010/025*	**23 Nm**	Torque wrench	• Installing the valve block, page 55
Torx screw *27.030/015*	**9.5 Nm**	Torque wrench	Observe tightening sequence. • Installing the sensor module, page 57
M6x22 cap screw *27.040/025*	**4.5 Nm**	Torque wrench	• Installing the selector actuator – model range 12, page 60 • Installing the selector actuator – model range 16, page 63
M6x22 cap screw *27.040/025*	**4.5 Nm**	Torque wrench	Observe tightening sequence. • Installing the selector actuator – model range 12, page 60 • Installing the selector actuator – model range 16, page 63
M6x22 cap screw *27.040/025*	**14 Nm**	Torque wrench	• Installing the selector actuator – model range 12, page 60 • Installing the selector actuator – model range 16, page 63
M6x22 cap screw *27.040/025*	**14 Nm**	Torque wrench	Observe tightening sequence. • Installing the selector actuator – model range 12, page 60 • Installing the selector actuator – model range 16, page 63

Designation	Tightening torque	Measuring instrument	Comment Chapter/Section
M8x16 hexalobular driving screw *31.882*	**9.5 Nm**	Torque wrench	• Installing the TRAXON cable, page 66
M6x16 hexalobular driving screw *71.033*	**9.5 Nm**	Torque wrench	• Installing the speed sensor, page 69
Impulse sensor *31.341*	**45 Nm**	Torque wrench	• Installing the impulse sensor – version without INTARDER, page 71 • Installing the impulse sensor – version with INTARDER, page 73
M24x1.5 hollow screw *47.210/080, 47.210/090*	**60 Nm**	Torque wrench	• Installing the oil/coolant heat exchanger, page 75 • Installing the oil-air heat exchanger valve block, page 77
M10x85 hexagon screw *47.210/100–47.210/120*	**46 Nm**	Torque wrench	• Installing the oil/coolant heat exchanger, page 75
M8x25 torx screw *47.200/130-47.200/160*	**23 Nm**	Torque wrench	• Installing the oil/coolant heat exchanger, page 75
M30x1.5 screw plug *47.200/070*	**80 Nm**	Torque wrench	• Installing the oil/coolant heat exchanger, page 75 • Installing the oil-air heat exchanger valve block, page 77
M10x95 hexagon screw *47.210/100–47.210/120*	**46 Nm**	Torque wrench	• Installing the oil-air heat exchanger valve block, page 77
M8x35 torx screw *47.200/130-47.200/160*	**23 Nm**	Torque wrench	• Installing the oil-air heat exchanger valve block, page 77
M12x45 screw with washer assembly *31.350-31.390*	**79 Nm**	Torque wrench	• Installing the cover for the PTO connection, page 80
M10x40 hexagon screw *31.400, 31.410*	**46 Nm**	Torque wrench	• Installing the cover for the PTO connection, page 80
Connecting nozzle *59.010*	**50 Nm**	Torque wrench	• Installing the compressed air connecting nozzle, page 83
M8x25 torx screw *68.100, 68.110, 68.120, 68.130*	**23 Nm**	Torque wrench	• Installing the ConAct, page 86
M6x40 hexagon screw *68.032, 68.034*	**9.5 Nm**	Torque wrench	• Installing the ConAct, page 86
M12x60 hexagon screw *35.030, 35.040*	**120 Nm**	Torque wrench	• Installing the output flange – version without INTARDER, page 89 • Installing the output flange – version with INTARDER, page 90

7 Workshop Equipment

7.1 Special tools

The required quantity is listed. Please inquire as to packaging unit before ordering.

Figure	Order no. Designation Chapter/Section	Qty.	Comment
 12_0C3056_02	**6008.208.550** **Diagnostic unit** • System scope, page 38 • Bleeding the ConAct with the diagnostic unit, page 44	1	ZF Testman Service Edition Kit (full version, only for ZF Aftermarket) Contains: diagnostic software 6008.208.500, diagnostic tool 6008.208.200 with different connection adapters.
 12_0C3057_02	**6008.208.500** **Diagnostic software** • System scope, page 38	1	ZF Testman Service Edition (full version, use only permitted for ZF Services Partners with valid contract)
 12_0C3056_02	**6008.208.450** **Diagnostic unit** • System scope, page 38 • Bleeding the ConAct with the diagnostic unit, page 44	1	ZF Testman IAM Edition Kit (customer version) Contains: diagnostic software 6008.208.400, diagnostic tool 6008.208.200 with different connection adapters.
 12_0C3057_02	**6008.208.400** **Diagnostic software** • System scope, page 38	1	ZF Testman IAM Edition (customer version)

Figure	Order no. Designation Chapter/Section	Qty.	Comment
 12_0C3553_01	**6008.206.052** **Adapter cable** • System scope, page 38	1	
 12_0C0502_01	**6008.207.050** **Adapter** • System scope, page 38	1	9-pin
 12_0C0502_01	**6008.207.150** **Adapter** • System scope, page 38	1	15-pin
 12_0C3556_01	**6008.207.085** **Adapter** • System scope, page 38	1	
 12_0C3557_01	**6008.207.025** **Adapter** • System scope, page 38	1	9-pin

Figure	Order no. Designation Chapter/Section	Qty.	Comment
 12_0C3568_01	**6008.205.033** **Customer service test equipment** • System scope, page 38	1	Contains: Adapter 6008.207.065, adapter cable 6008.206.056, adapter cable 6008.206.060, assembly aid 1X56.911.560
 12_0C0501_01	**6008.207.077** **Adapter cable** • System scope, page 38	1	On-board diagnosis 2

7.2 Standard tools and fixtures

To repair the ZF product, the following standard tools and fixtures must be available.

Standard tool		
Designation	**Requirement**	**Comment**
Torque wrench	Calibrated to DIN EN ISO 6789, with noticeable and audible actuation	Tightening torques *(refer to Chapter Tightening Torques)*
Socket wrenches, open-end wrenches, box wrenches, hammers, screw drivers, pliers	Various sizes	

Tab. 6

Measuring instrument and test equipment		
Designation	**Requirement**	**Comment**
Caliper with digital display	Measurement accuracy: 0.01 mm Measurement range: various lengths	

Tab. 7

Other equipment		
Designation	**Requirement**	**Comment**
Funnel	Oil-resistant, flexible metal outlet	
Container	Container volume: at least oil quantity of ZF product *(refer to Section Oil quantity)*	

Tab. 8

7.3 Operating supplies and auxiliary materials

Order no. Designation	Manufacturer name	Comment Chapter/Section
0671.190.009 Grease	RENOLIT CX-FO 20	• Installing the sensor module, page 57 • Installing the speed sensor, page 69 • Installing the cover for the PTO connection, page 80 • Installing the compressed air connecting nozzle, page 83
0671.190.148 Grease	RENOLIT 283 EP2	• Installing the sensor module, page 57 • Installing the speed sensor, page 69 • Installing the cover for the PTO connection, page 80 • Installing the compressed air connecting nozzle, page 83
0671.190.107 Grease	RENOLIT CX-EP2	• Installing the sensor module, page 57 • Installing the speed sensor, page 69 • Installing the cover for the PTO connection, page 80 • Installing the compressed air connecting nozzle, page 83
0671.190.158 Vaseline	COXTEC 5141	• Installing the oil/coolant heat exchanger, page 75 • Installing the oil-air heat exchanger valve block, page 77

8 Maintenance

Regular maintenance extends the transmission's service life.

Observe the following in addition:

- Engage the parking brake of the vehicle.
- Avoid damage during maintenance works.
- Observe the vehicle manufacturer specifications.

8.1 Maintenance plan

Maintenance interval	Maintenance work
According to specifications in the List of Lubricants	Change oil.
At every vehicle inspection	Complete back-up documentation.
	Check wiring.
	Check venting.
	Check leak tightness.
	Check the oil level.
	Service the compressed air system.
	Complete the checklist.[3)]

Tab. 9 Maintenance plan

8.2 Maintenance preparations

8.2.1 Completing back-up documentation

Complete back-up documentation with ZF Testman *(refer to ZF-ServiceLine)*.

8.3 Checking wiring

- Check wiring for damage.
- Ensure correct fit of plugs.
  - Plugs are fully engaged
  - Plugs are mounted without any strain

8.4 Checking the venting

The transmission is equipped with a breather as standard. The breather is only visible when the transmission control is removed. The air escapes at the bottom of the transmission. The air outlet must be free from contamination.

3) The TRAXON checklist is available in ZF Testman or from the ZF-ServiceLine.

8.5 Checking leak tightness

For intervals refer to maintenance plan.

Check transmission and add-on components for leak tightness.

8.6 Checking oil level

NOTICE

Possible malfunction of or damage to transmission due to insufficient oil quantity.
⇨ Perform oil level checks regularly and keep right oil level.

8.6.1 Checking transmission oil level

Requirements:
- Test drive has been concluded.
- Vehicle is in horizontal position.
- Engine is off.
- Vehicle parking brake is engaged.
- Transmission oil temperature approx. 30°C.
- In the event of a transverse installation inclination, the transmission is aligned to 0° transverse inclination.

Check oil level within 5 minutes after the test drive.

1. Remove M24x1.5 screw plug (2) *01.010* at the oil filling point.
2. Check the oil level. If the oil level has fallen below the oil filler hole, top up the oil *(refer to Section Filling oil)*.
3. Clean M24x1.5 screw plug (2) *01.010*.
4. Renew O-ring on the M24x1.5 screw plug (2) *01.010*.
5. Screw in M24x1.5 screw plug (2) *01.010* and tighten.
   Tightening torque: **60 Nm**

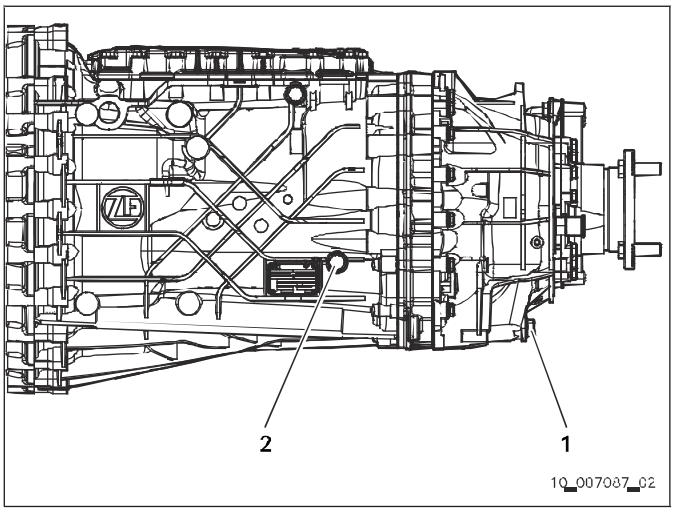

Fig. 10 Version without INTARDER

8.6.2 Checking oil level for version with INTARDER

Test drive:

- Accelerate to at least 10 km/h.
- Briefly actuate the INTARDER at the highest brake stage.
- Switch off the INTARDER.
- Drive at a speed of at least 10 km/h for at least 1 minute, do not actuate the INTARDER during this period.

Requirements:

- Test drive has been concluded.
- Vehicle is in horizontal position.
- Engine is off.
- Vehicle parking brake is engaged.
- Transmission oil temperature approx. 30°C.
- In the event of a transverse installation inclination, the transmission is aligned to 0° transverse inclination.

Check oil level within 5 minutes after the test drive.

NOTICE

Damage or operational malfunction of the INTARDER could occur if the oil level is too low.

⇨ Apply the service brake.

⇨ Continue driving with increased caution, with deceleration via service brake.

⇨ Maintain the INTARDER.

1. Remove M24x1.5 screw plug (1) *01.010* at the oil filling point.

2. Check the oil level. If the oil level has fallen below the oil filler hole, top up the oil *(refer to Section Filling oil)*.

3. Clean M24x1.5 screw plug (1) *01.010*.

4. Renew O-ring on the M24x1.5 screw plug (1) *01.010*.

5. Screw in M24x1.5 screw plug (1) *01.010* and tighten.
   Tightening torque: **60 Nm**

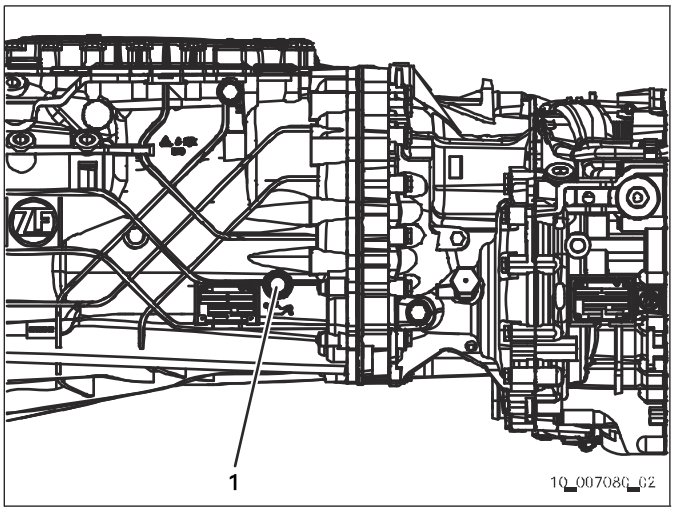

Fig. 11 Version with INTARDER

8.7 Oil change interval

To maintain the service life and the operational safety of the ZF product, the oil change intervals specified in the ZF List of Lubricants must be observed. For the applicable ZF List of Lubricants, please refer to the type plate or to Chapter Technical Data.

The latest List of Lubricants can be obtained from all ZF Service Centers or viewed at www.zf.com.

8.8 Oil change

8.8.1 Draining oil

Requirements:

- Vehicle is in horizontal position.
- Engine is off.
- Vehicle parking brake is engaged.
- Transmission oil temperature is at approx. 50°C.

⚠ CAUTION

Risk of burn injuries due to contact with hot oil.
Slight or moderate injury possible.
⇨ Wear protective goggles.
⇨ Wear protective gloves.

⚠ Observe safety instructions for operating supplies and auxiliary materials *(refer to Section General safety instructions)*.

1. Remove M24x1.5 screw plug (1) *31.150*. Collect oil in a suitable container and dispose of in accordance with environmental guidelines.

2. Clean the magnet on M24x1.5 screw plug (1) *31.150*.

3. Renew O-ring on the M24x1.5 screw plug (1) *31.150*.

4. Screw in M24x1.5 screw plug (1) *31.150* and tighten.
   Tightening torque: **60 Nm**

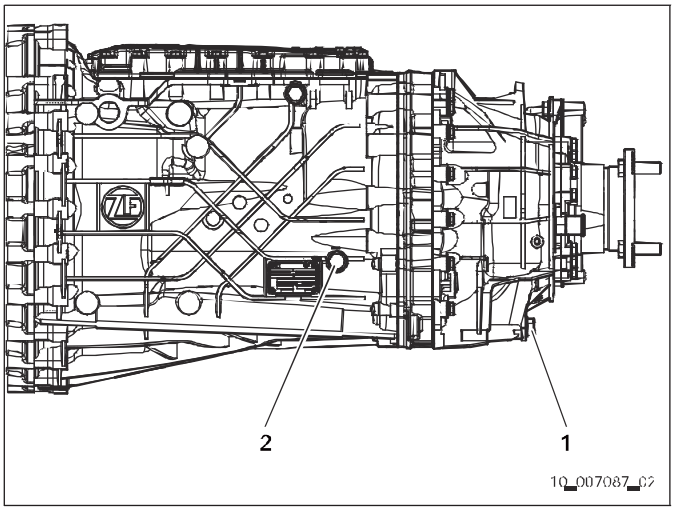

Fig. 12 Version without INTARDER

8.8.2 Draining oil for the version with INTARDER

Requirements:

- Vehicle is in horizontal position.
- Engine is off.
- Vehicle parking brake is engaged.
- Transmission oil temperature approx. 50°C.

Do not actuate the INTARDER just before parking the vehicle. This ensures that the correct oil quantity for oil drainage is set in the transmission.

⚠ CAUTION

Risk of burn injuries due to contact with hot oil.
Slight or moderate injury possible.
⇨ Wear protective goggles.
⇨ Wear protective gloves.

Observe safety instructions for operating supplies and auxiliary materials *(refer to Section General safety instructions)*.

1. Remove M24x1.5 screw plugs (1) *01.050, 31.150*. Collect oil in a suitable container and dispose of in accordance with environmental guidelines.
2. Clean the magnet on M24x1.5 screw plugs (1) *01.050, 31.150*.
3. Replace the O-ring on M24x1.5 screw plugs (1) *01.050, 31.150*.
4. Turn in M24x1.5 screw plugs (1) *01.050, 31.150* and tighten.
   Tightening torque: **60 Nm**

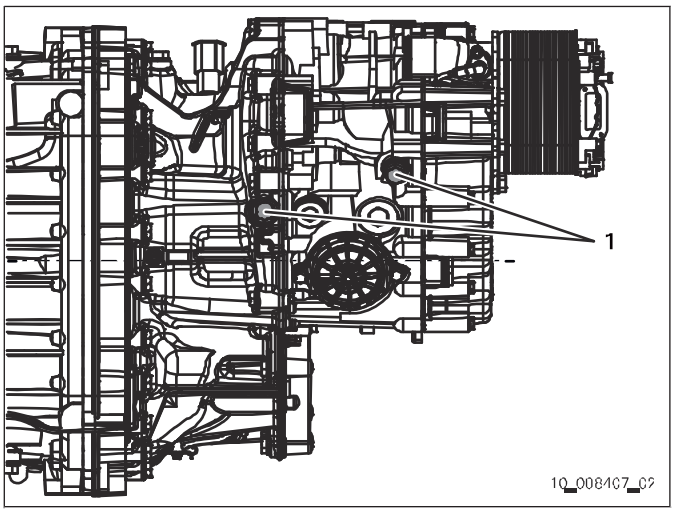

Fig. 13

The oil filter must be replaced after draining the oil *(refer to Section Replacing the oil filter at the INTARDER)*.

8.8.3 Replacing the oil filter at the INTARDER

Requirements:

- Oil has been drained.

- Use a new oil filter for each oil change.
- O-rings have been installed at the oil filter.

⚠ CAUTION

Risk of burn injuries due to contact with hot oil.
Slight or moderate injury possible.
⇨ Wear protective goggles.
⇨ Wear protective gloves.

1. Remove M8x20 hexagon screws (2) *01.210, 01.220* at suction filter (1) *01.200*.

2. There is residual oil in the INTARDER housing.

   Collect oil in a suitable container and dispose of in accordance with environmental guidelines.

   Pull suction filter (1) *01.200* out of the INTARDER housing.

3. Dispose of suction filter (1) *01.200* in compliance with environmental regulations.

4. Apply a thin layer of grease to O-rings (2) at the new suction filter (1) *01.200*.

5. Insert the new suction filter (1) *01.200* into the INTARDER housing.

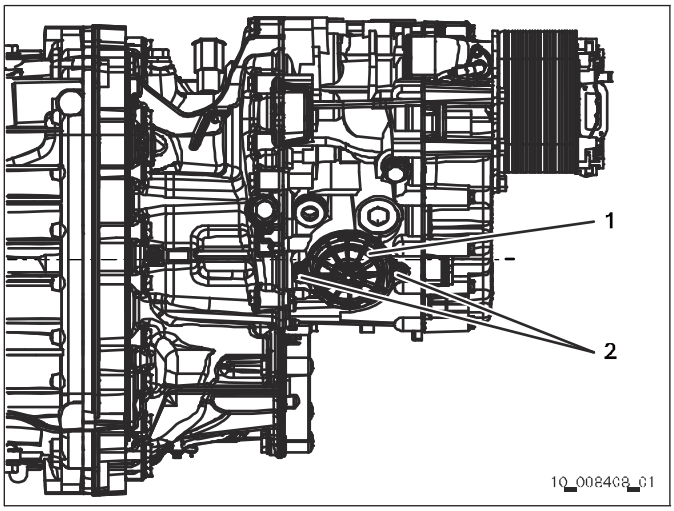

Fig. 14

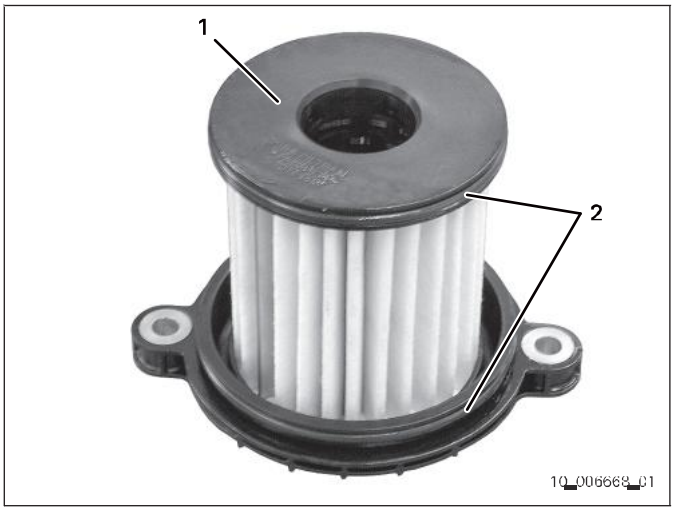

Fig. 15

6. Screw in M8x20 hexagon screws (2) *01.210, 01.220* and tighten.
Tightening torque: **23 Nm**

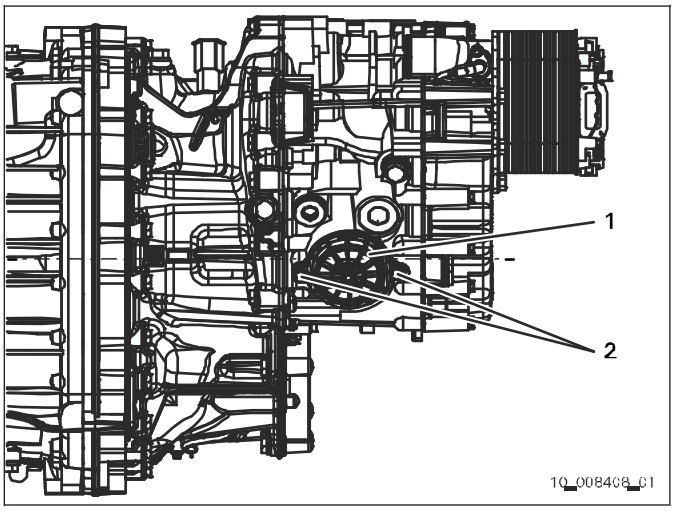

Fig. 16

8.8.4 Filling oil

Requirements:

- Vehicle is in horizontal position.
- Engine is off.
- Vehicle parking brake is engaged.
- In the event of a transverse installation inclination, the transmission is aligned to 0° transverse inclination.

⚠ Observe safety instructions for operating supplies and auxiliary materials *(refer to Section General safety instructions)*.

1. Remove M24x1.5 screw plug (2) *01.010* at the oil filling point.
2. Fill in oil through the oil filler hole (2) until the oil level reaches the lower edge of the oil filler hole.
3. Clean M24x1.5 screw plug (2) *01.010*.
4. Renew O-ring on the M24x1.5 screw plug (2) *01.010*.
5. Screw in M24x1.5 screw plug (2) *01.010* and tighten.
Tightening torque: **60 Nm**
6. Check oil level *(refer to Section Checking oil level at the transmission)*.

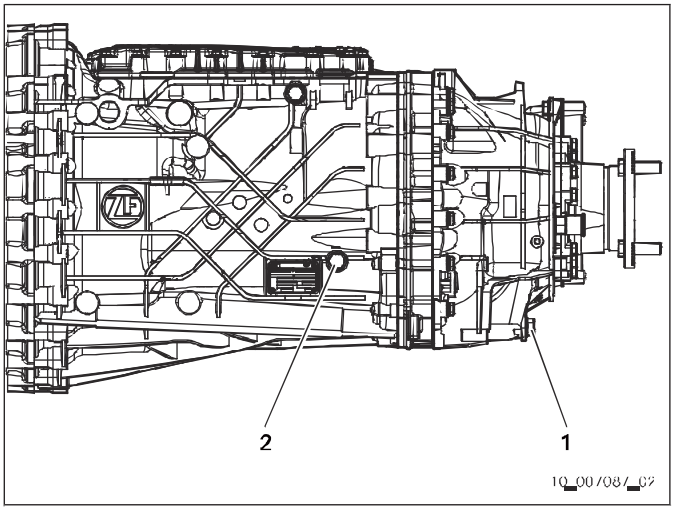

Fig. 17 Version without INTARDER

8.8.5 Filling oil for version with INTARDER

Requirements:

- Vehicle is in horizontal position.
- Engine is off.
- Vehicle parking brake is engaged.
- In the event of a transverse installation inclination, the transmission is aligned to 0° transverse inclination.

Transmission and INTARDER share a common oil supply.

Observe safety instructions for operating supplies and auxiliary materials *(refer to Section General safety instructions)*.

1. Remove M24x1.5 screw plug (1) *01.010* at the oil filling point.
2. Fill in oil through the oil filler hole (1) until the oil level reaches the lower edge of the oil filler hole.
3. Clean M24x1.5 screw plug (1) *01.010*.
4. Renew O-ring on the M24x1.5 screw plug (1) *01.010*.
5. Screw in M24x1.5 screw plug (1) *01.010* and tighten.
   Tightening torque: **60 Nm**

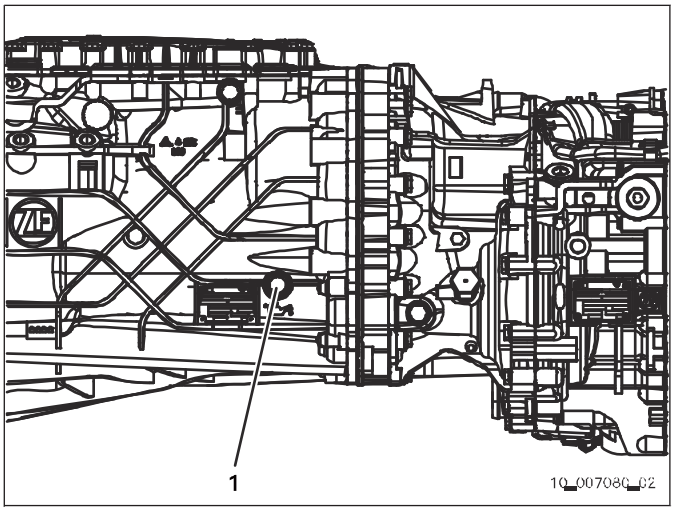

Fig. 18 Version with INTARDER

6. Check oil level *(refer to Section Checking oil level for version with INTARDER)*.

8.9 Servicing the compressed air system

The specifications in the vehicle manufacturer's Maintenance manual are binding.

9 Diagnosis

9.1 ZF Testman

The ZF Testman software can be used universally on all diagnosable ZF vehicle systems.

All necessary, system-specific data required for a rapid and comprehensive diagnosis can be retrieved using the ZF Testman software. The ZF Testman software licensed by ZF is made available for download. The software is saved onto the hard disk by means of an installation routine. The license term of the ZF Testman software is limited and must be extended every year. General licensing conditions are included in the Operating Instructions ZF Testman *(refer to Operating Instructions 6008.758.104)*.

Targeted troubleshooting allows staff trained by ZF to rapidly find the fault in the transmission system or the propulsion system.[4)] After having identified the fault, the ZF Testman software will propose remedial measures.

Communication between the electronic control units and the ZF Testman interface adapter occurs via various interfaces (e.g. CAN). Communication between the ZF Testman interface adapter and the PC occurs via USB, LAN or Bluetooth. Each screen page can be printed or saved for fault documentation. The ZF Testman software is available in several languages.

Scope of functions (standard)

- **Statistics data**
  All statistics data saved on the control unit can be displayed and saved locally.
- **Diagnosis**
  Current fault display; read fault memory; delete fault memory; read identification data.
- **Monitoring** (depending on the application)
  Test device (displays all digital inputs and outputs); display of digital and analog parameters, e.g. speeds, amperage and voltage.
- **Documentation**
  Repair instructions, information regarding preventive maintenance, pressures, circuit diagrams, electrical measuring values, troubleshooting tips as well as diagnostics logs are sometimes made available as a PDF file.

Scope of functions (depending on the ZF Testman edition and application)

- **Vehicle configuration**
  Depending on the ZF product, all vehicle-specific data can be set or driving programs can be selected and adapted.
- **Programming (flashing)**
  Available programming files can be installed.
- **Calibration**
  ZF products can be calibrated.
- **Datalogger**
  ZF Testman can be used to record and evaluate all system-relevant values.
- **Control of outputs**
  Outputs (e.g. clutch valves) can be actuated, depending on the ZF product. This allows testing a function, e.g. checking clutch pressures.

4) Depends on the application.

- **CAN measuring technology (optional)**
  The CAN measuring technology can be used to read in and record external values like real pressures, temperatures and volumes. Internal values from the electronic transmission control module and external values can be combined here.

System requirements and scope of supply
Refer to Operating Instructions 6008.758.104.

9.1.1 System scope

The following system scope for ZF Testman is available for the ZF product.

Order no. / Designation	Business
6008.208.550 [Diagnostic unit]	ZF Testman Service Edition Kit
6008.208.500 [Diagnostic software]	ZF Testman Service Edition
6008.208.450 [Diagnostic unit]	ZF Testman IAM Edition Kit
6008.208.400 [Diagnostic software]	ZF Testman IAM Edition
6008.206.052 [Adapter cable]	T adapter
6008.207.050 [Adapter]	Connection of ZF Testman to the DPA 05 interface adapter.
6008.207.150 [Adapter]	Connection of ZF Testman to the DPA 06 interface adapter.
6008.207.085 [Adapter]	Table mode adapter connection
6008.207.025 [Adapter]	Universal diagnostic adapter
6008.205.033 [Customer service test equipment]	Actuation of the ZF AS TRONIC test bench clutch.
6008.207.077 [Adapter cable]	Connection of ZF Testman at the control unit (for on-board diagnosis).

Tab. 10 System scope

(refer to Section Special tools)

10 Transport and Storage

10.1 Transport

10.1.1 General transport instructions

⚠ WARNING

Risk of injury due to uncontrolled motion of the load.
Death or serious injury possible.

- ⇨ Only use the suspension points intended for transportation purposes.
- ⇨ Only use secure, permitted, and tested means of transport, chain hoist, and lifting equipment with sufficient load capacity and suitable lifting technology.
- ⇨ Ensure that lifting equipment such as ropes and belts are not in contact with sharp edges and are not knotted or twisted.
- ⇨ Properly attach lifting appliances to load.
- ⇨ Observe the load's center of gravity! The crane hook must be located above the load's center of gravity.
- ⇨ Lift load slowly and observe whether the load tilts or swivels out laterally. If required, immediately put down load and modify attachment.
- ⇨ Keep distance.
- ⇨ Do not walk under suspended loads.
- ⇨ Only ever move load under supervision.

NOTICE

Possible damage to ZF product due to inappropriate transport.

- ⇨ The ZF product must be protected from damage during transport.

NOTICE

Possible damage to transmission due to inappropriate weight at suspension points and suspension eyes.

- ⇨ The provided suspension points and suspension eyes are designed to carry the transmission weight only.
- ⇨ When the engine or auxiliaries are installed on the transmission, the transmission's suspension points and suspension eyes must not be used.

⚠ Observe safety instructions for handling ZF products *(refer to Section General safety instructions)*.

- The ZF product is delivered on a special load carrier.
- Secure the load carrier to the transport vehicle using suitable devices.
- Protect the ZF product against dirt, moisture and damage by means of suitable covers and load carriers.
- Do not set down or store the load carrier with the ZF product outdoors.
- If the transmission was tilted during transport, this must be immediately reported to ZF.

- Immediately notify ZF of transport damage.
- Only use permitted means of transport, lifting tools with sufficient load capacity and suitable lifting technology.

Observe the general transport instructions also for return deliveries of the ZF product to ZF. If required, request a suitable load carrier from ZF.

10.1.2 Transporting with a crane

Please observe the safety instructions *(refer to Section General safety instructions).*

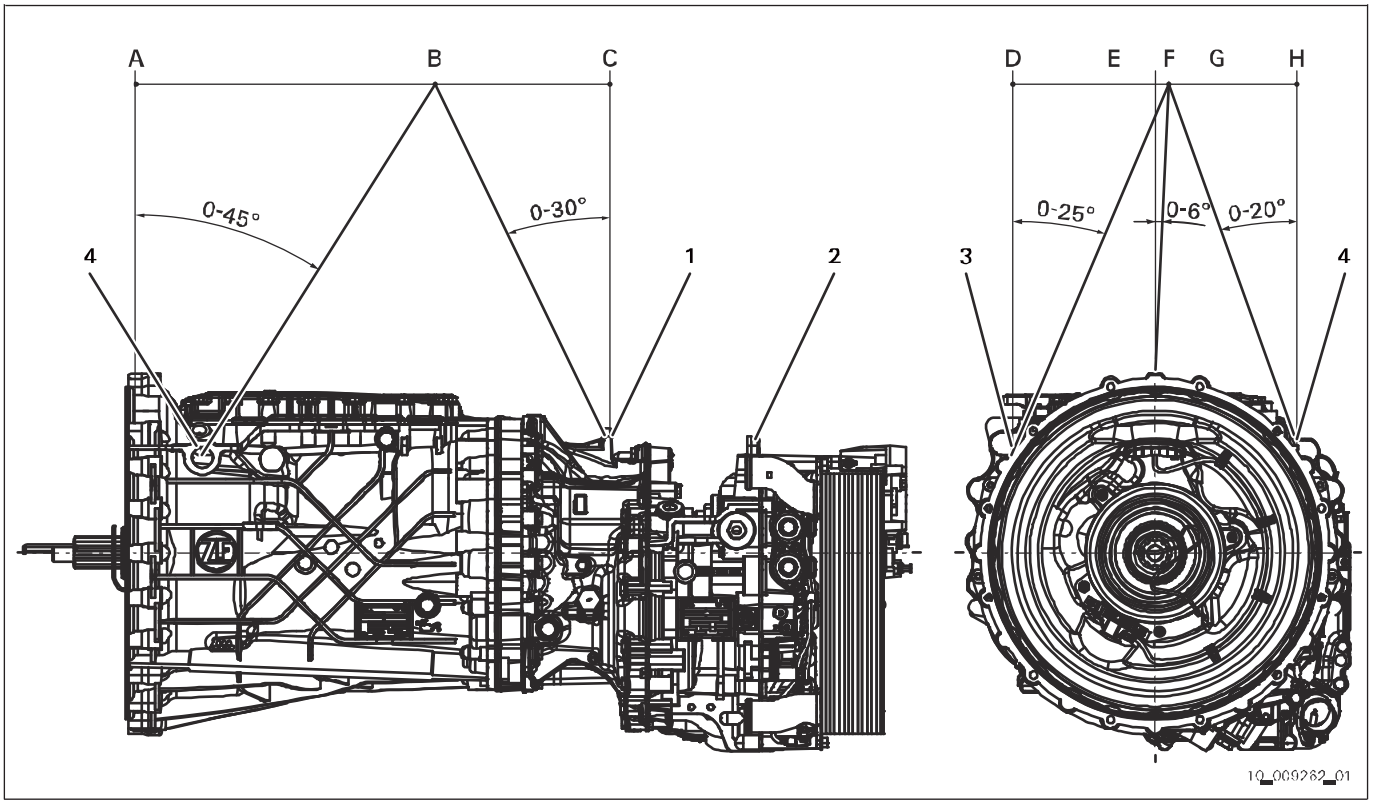

Fig. 19 Lifting tackle: fastening points and angles

Use lugs (1, 3, 4) to transport the transmission. Do **not** use lug (2) on the INTARDER to transport the transmission.

ZF will not accept liability for damage to transmission components caused by inappropriate transport.

Transporting the transmission

- For lifting and transporting, only use the three lugs on the transmission that are intended for this purpose.
- Select an appropriate hook size (maximum hook size 10 as per DIN 15401) so that the hooks can move freely and are not supported inside the lugs (risk of breakage).
- Select an appropriate chain length and angle so that the bending forces applied to the lugs are as low as possible. The permissible angles (refer to the figure) must be observed.
- The transmission must not be suspended at its input shaft, e.g. during transport (damage to bearings and gearings).
- Using slings on the transmission for transport purposes is not permitted.
- Using the lugs or the transmission to lift or transport the transmission is not permitted if the transmission is flanged to the engine. The lugs are designed to carry the weight of the transmission only.
- When transporting the transmission, a maximum acceleration of 1.8 m/min^2 must not be exceeded (use precision speed).
- The maximum permissible load on the lugs as indicated in the installation drawing must not be exceeded.
- ZF Friedrichshafen AG cannot be held liable for any damage caused by incorrect transport.



Fig. 20

Transporting the transmission with the INTARDER
Only use the three lugs (1) on the basic transmission intended for this purpose to lift and transport the transmission. Do not use lug (2) on the INTARDER. Lug (2) is not designed to lift or transport the transmission. When setting down the transmission, make sure that the heat exchanger does not come into contact with the floor.



Fig. 21

10.2 Storage

The transmissions may be stored at temperatures between -40°C and +80°C.

10.3 Corrosion protection and preservation

ZF recommends ordering the transmission with standard corrosion protection. The standard corrosion protection is effective for 6 months. Special applications involving a high corrosion risk (e. g. snow-clearing) require special corrosion protection measures, which can be specified when requested.

11 Preparatory Activities

11.1 Preparing ZF product

11.1.1 Completing back-up documentation

Complete back-up documentation with ZF Testman *(refer to ZF-ServiceLine)*.

11.1.2 Bleeding the ConAct

⚠ CAUTION

Risk of crushing due to moving parts.
Slight or moderate injury possible.
⇨ Do not reach into danger area!

Always bleed the ConAct and make sure the ConAct is in a hazard-free state. Only then work on the transmission may be performed with the transmission installed or removed.

- Hazard-free state with the transmission installed in the vehicle:
  The ConAct is retracted. The ConAct is made hazard-free via the clutch pressure plate.
- Hazard-free state with the transmission removed from the vehicle:
  The ConAct is extended. The ConAct is made hazard-free via the integrated spring.

11.1.2.1 Bleeding the ConAct with the diagnostic unit

Requirements:
- Vehicle is in horizontal position.
- Engine is off.
- Parking brake of the vehicle is engaged.

Special tools:
- 6008.208.450 Diagnostic unit
- 6008.208.550 Diagnostic unit

1. Connect the diagnostic unit to the transmission system (e.g., 6008.208.450 [Diagnostic unit], 6008.208.550 [Diagnostic unit]).

2. Bleed the ConAct.

3. Make sure the ConAct is in a hazard-free state *(refer to Section Bleeding the ConAct)*.

   → The ConAct is depressurized. Work on the transmission may now be performed.

4. If the ConAct is not in a hazard-free state *(refer to Section Bleeding the ConAct)*, bleed the ConAct manually *(refer to Section Manually bleeding the ConAct)*.

11.1.2.2 Manually bleeding the ConAct

Requirements:
- Vehicle is in horizontal position.
- Engine is off.
- Parking brake of the vehicle is engaged.

Only manually bleed the ConAct in an exceptional case (e.g., in the event of a malfunction).

1. Loosen screw plug (1) and remove together with sealing ring *27.010/035*.

   → The breather screw (2) *27.010/035* is now accessible through the opening.

2. Loosen the breather screw (2) *27.010/035* and wait until the air has escaped.

   - Use a magnetic hexagon socket wrench, width across flats 5.
   - Leave the hexagon socket wrench on the breather screw and wait until the air has escaped. Otherwise, there is a risk that the breather screw will be pulled out of its guide and fall next to the guide.
   - No dirt may enter the inside of the ConAct.

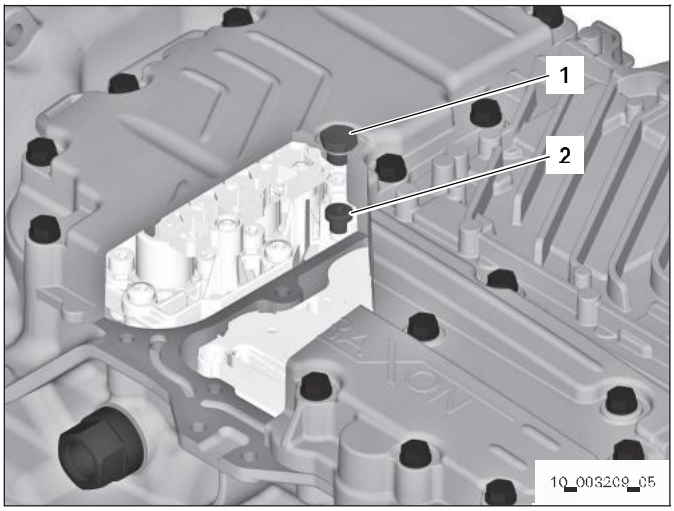

Fig. 22

3. Make sure the ConAct is in a hazard-free state *(refer to Section Bleeding the ConAct)*.

   → The ConAct is depressurized.

4. Tighten breather screw (2) *27.010/035*.
   Tightening torque: **10 Nm**

5. Screw in and tighten screw plug (1) with new sealing ring *27.010/035*.
   Tightening torque: **35 Nm**

   → Work on the transmission may now be performed.

11.1.3 Preparing for retrofitting of the oil/coolant heat exchanger

Requirements:
- Ignition is off.

- Battery is disconnected.
- Protective measures for leaking oil and coolant have been taken.
- Oil has been drained *(refer to Section Draining oil)*.
- Coolant has been drained in accordance with the vehicle manufacturer's specifications.

Oil might escape when removing the screw plug. Drain liquid into suitable container.

Observe safety instructions for operating supplies and auxiliary materials *(refer to Section General safety instructions)*.

1. Loosen and remove the two M24x1.5 screw plugs (2) *47.400, 47.410*.
2. Remove the three screw plugs (1).
3. Clean the supporting surfaces.

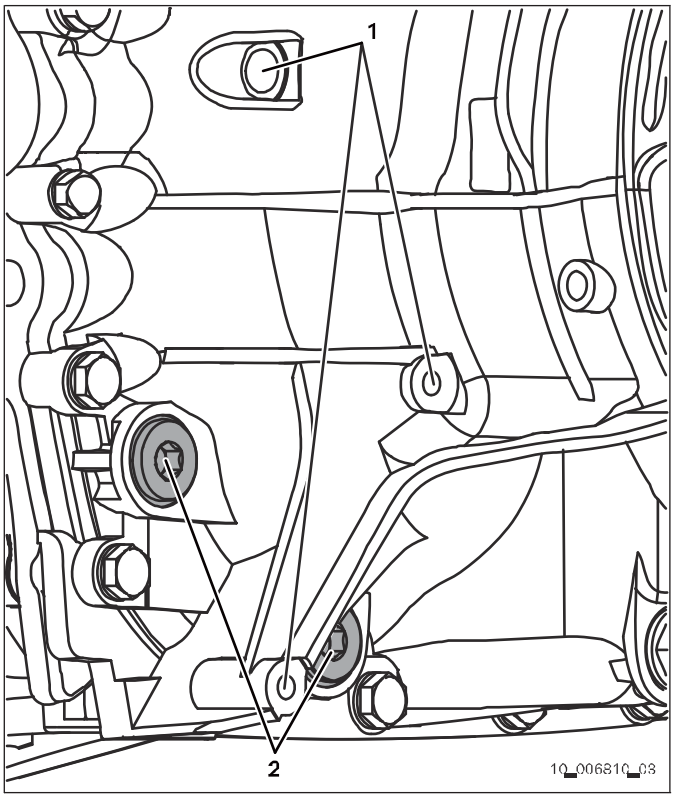

Fig. 23

11.1.4 Preparing for retrofitting of the oil-air heat exchanger valve block

Requirements:

- Ignition is off.
- Battery is disconnected.
- Protective measures for leaking oil have been taken.
- Oil has been drained *(refer to Section Draining oil)*.

Oil might escape when removing the screw plug. Drain liquid into suitable container.

Observe safety instructions for operating supplies and auxiliary materials *(refer to Section General safety instructions)*.

1. Loosen and remove the two M24x1.5 screw plugs (2) *47.400, 47.410*.

2. Remove the three screw plugs (1).

3. Clean the supporting surfaces.

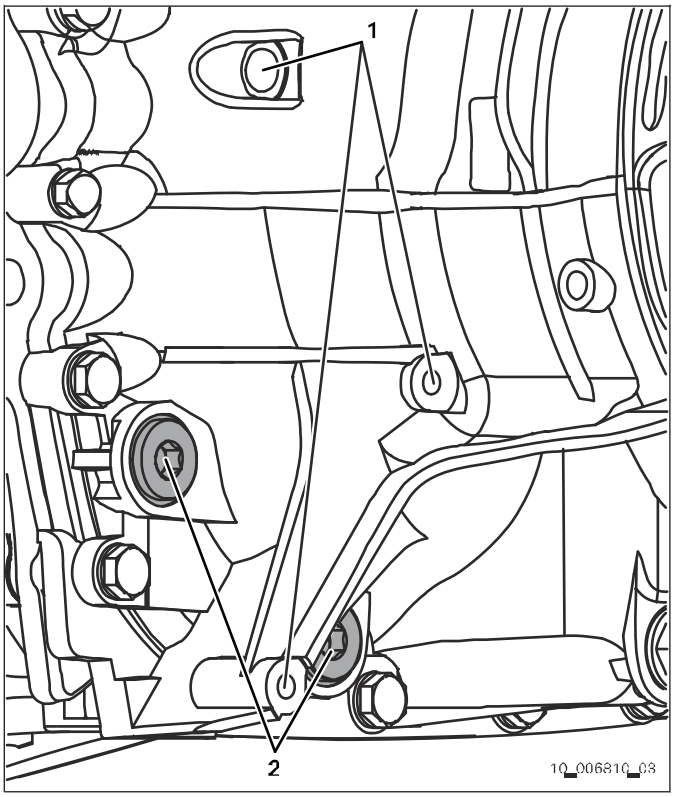

Fig. 24

12 Replacing components

Observe the following:

- Engage the parking brake of the vehicle.

12.1 Replacing the transmission control unit

12.1.1 Removing the transmission control

Requirements:

- Ignition is off.
- Battery is disconnected.
- Plug connection has been cleaned.
- Vehicle-end connector of the transmission control has been removed according to the vehicle manufacturer's provisions.

NOTICE

Property damage due to electrostatic discharge (ESD) possible.

⇨ Observe ESD protection.
⇨ Do not touch contacts.
⇨ Wear conductive workwear.
⇨ Use ESD transport protection.
⇨ Use ESD protective packaging.

1. Remove TRAXON cable (1) *27.060* from cable clamp (2) *27.062*.

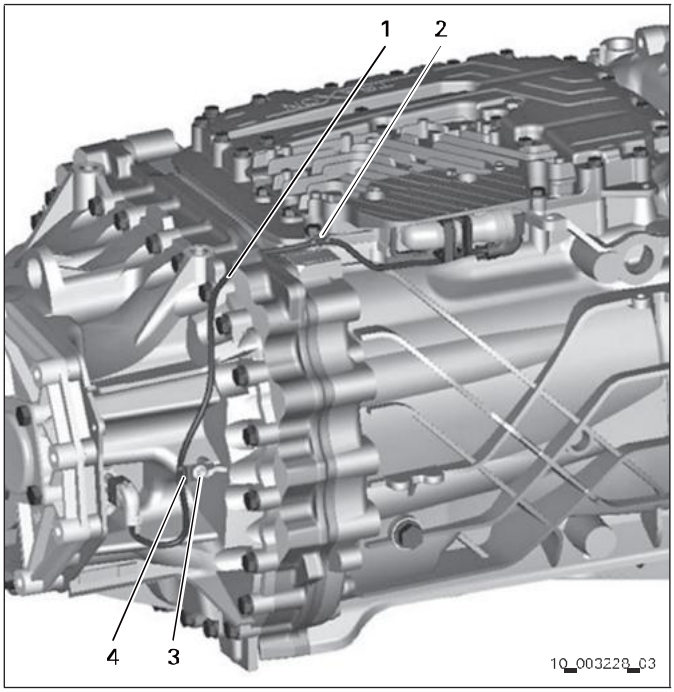

Fig. 25

2. With a screwdriver, carefully push forward locking slide (2) of plug (1) of TRAXON cable *27.060* to the stop.

3. Remove plug (1) of TRAXON cable *27.060* from transmission control.

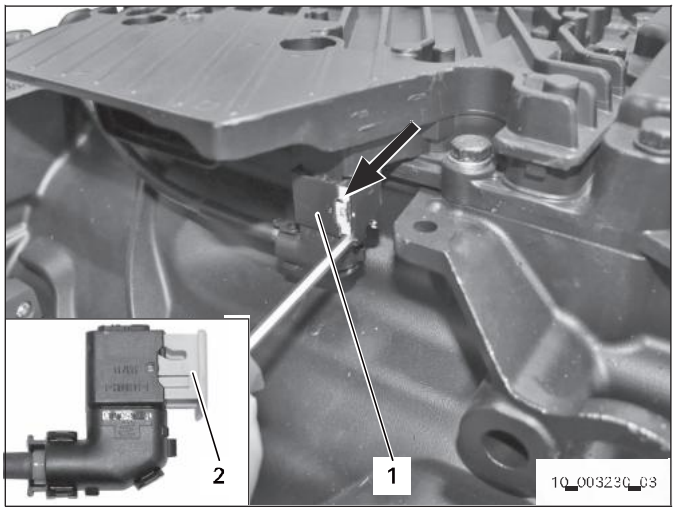

Fig. 26

4. Loosen and remove 23 M8x55 hexagon screws (1, 5, 6) *27.100–27.320*.

5. Loosen and remove three M8x35 hexagon screws (4) *27.350, 27.370, 27.380*.

6. Loosen M8x35 hexagon screw (3) *27.360* and remove together with cable clamp (2) *27.062*.

7. Screw two M8 guide pins into tapped holes for M8x55 hexagon screws (1, 5).

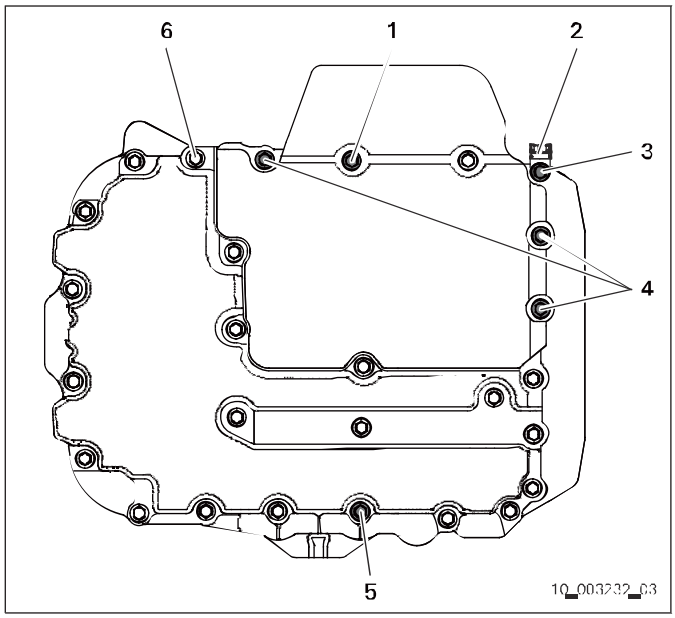

Fig. 27

8. Carefully lift off transmission control (1) *27.020*.

9. Put down transmission control (1) *27.020* with sealing surface facing upwards.

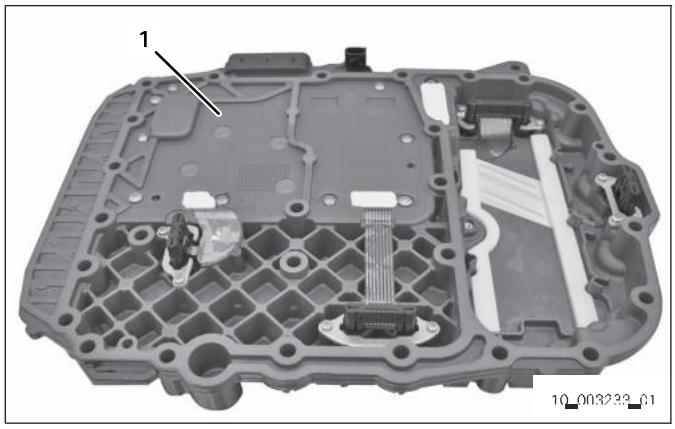

Fig. 28

10. Remove two M8 guide pins (1).

11. Remove gasket (2) *27.090*.

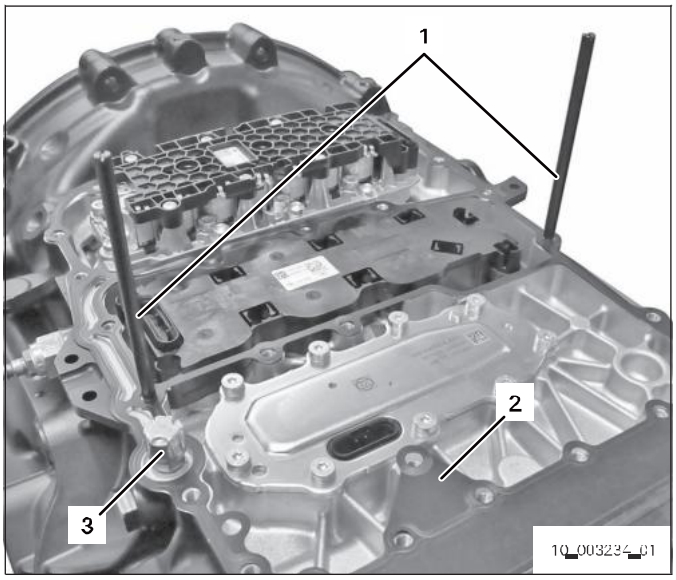

Fig. 29

12.1.2 Installing the transmission control

NOTICE

Property damage due to electrostatic discharge (ESD) possible.

⇨ Observe ESD protection.
⇨ Do not touch contacts.
⇨ Wear conductive workwear.
⇨ Use ESD transport protection.
⇨ Use ESD protective packaging.

1. Clean sealing faces.

2. Fit new gasket (2) *27.090*.

3. The guide pins prevent that the flex foil of the transmission control becomes damaged when positioning the transmission control.

   Screw in two M8 guide pins (1).

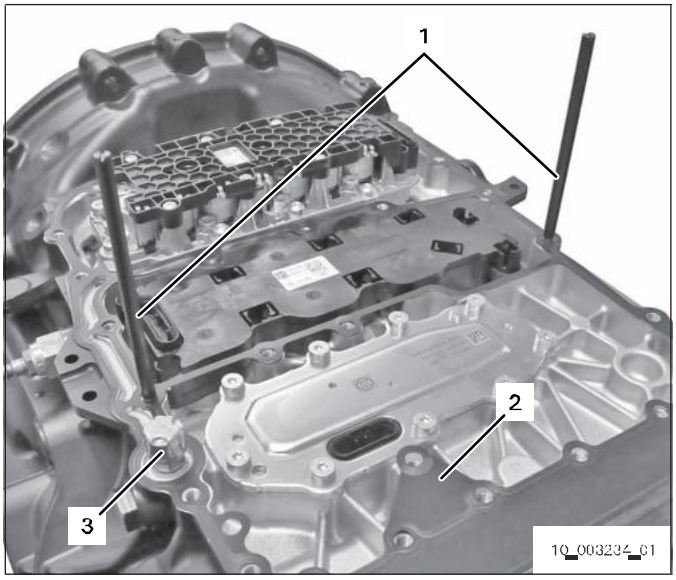

Fig. 30

4. Carefully position transmission control unit (1) *27.020*, avoiding damage to the electronic components.

   → Connectors of the transmission control have snapped in.

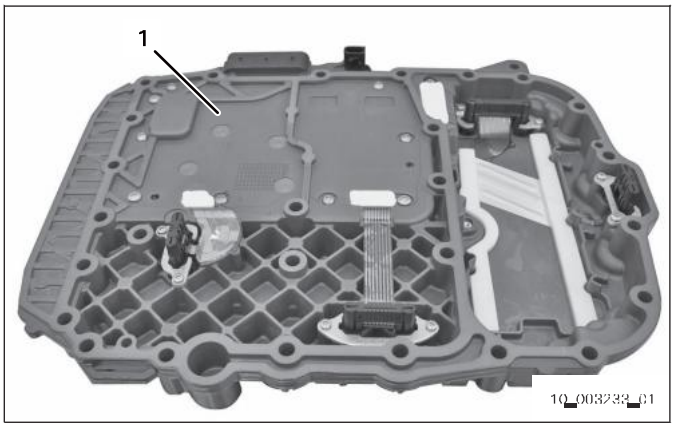

Fig. 31

5. Turn in 21 M8x55 hexagon screws (6) *27.100–27.300* by hand.

6. Remove two M8 guide pins.

7. Turn in two M8x55 hexagon screws (1, 5) *27.310, 27.320* by hand.

8. Turn in three M8x35 hexagon screws (4) *27.350, 27.370, 27.380* by hand.

9. Position cable clamp (2) *27.062* and turn in M8x35 hexagon screw (3) *27.360* by hand.

10. Tighten screw connection from inside to the outside.

    Tighten 27 hexagon screws *27.100–27.380*.
    Tightening torque: **29 Nm**

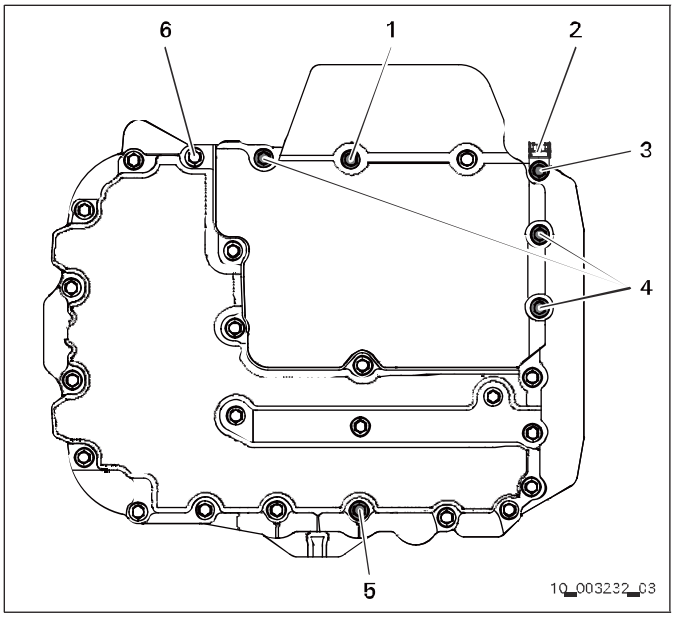

Fig. 32

11. Insert TRAXON cable (1) *27.060* into cable clamp (2) *21.062*.

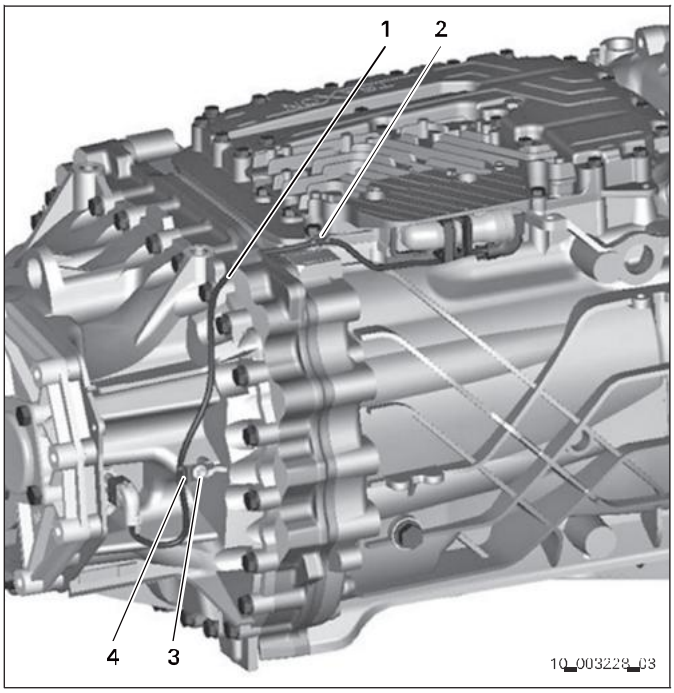

Fig. 33

12. The transmission control must be completely screwed to the transmission.

    Insert connector (1) of TRAXON cable *27.060* into transmission control in a strain-relieved way.

13. Push connector (1) of TRAXON cable *27.060* in transmission control until firmly home and lock locking slide (2) of the connector (1) of TRAXON cable *27.060*.

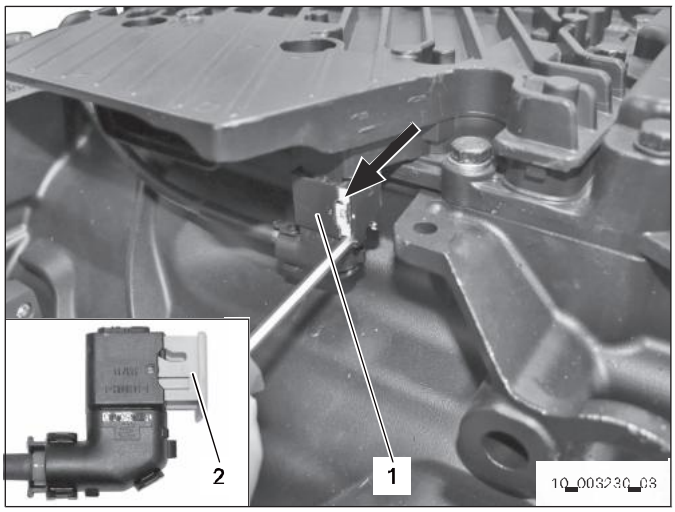

Fig. 34

12.2 Replacing breather

12.2.1 Removing breather

Requirements:

- Transmission control has been removed *(refer to Section Removing the transmission control)*.

1. Loosen and remove breather (3) *27.050*.

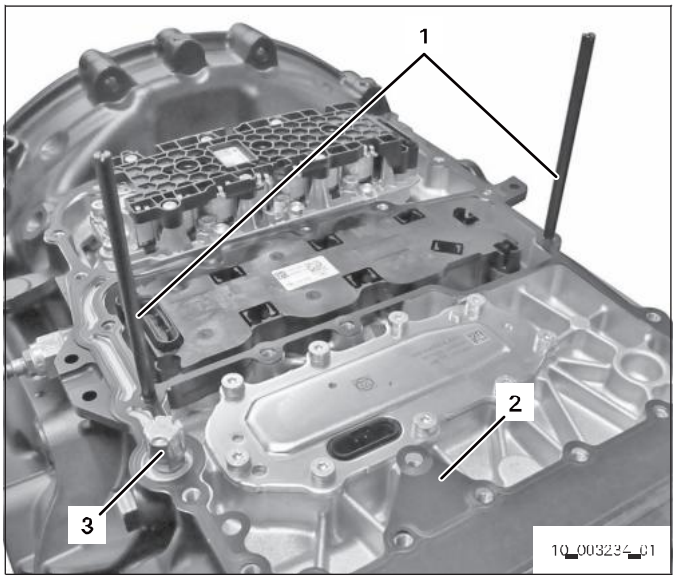

Fig. 35

12.2.2 Mounting breather

1. Screw in breather (3) *27.050* and tighten.
   Tightening torque: **10 Nm**

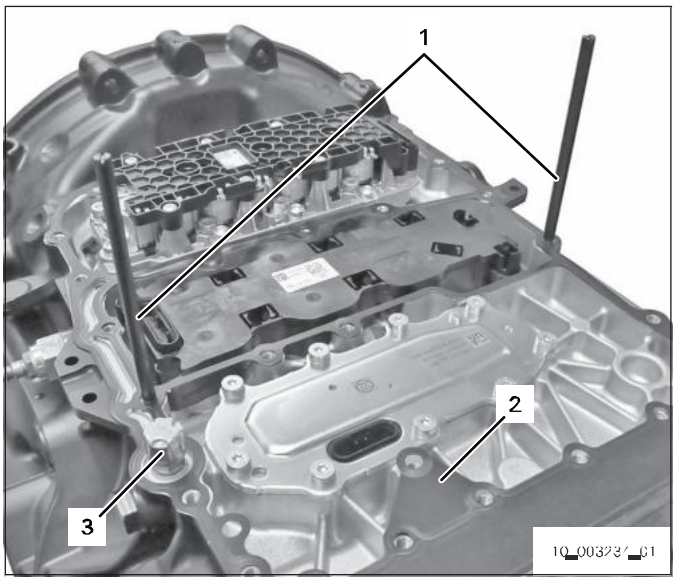

Fig. 36

12.3 Replacing the Valve Block

12.3.1 Removing the valve block

Requirements:

- Transmission control has been removed *(refer to Section Removing the transmission control)*.

Only loosen the specified screws.

NOTICE

Property damage due to electrostatic discharge (ESD) possible.

⇨ Observe ESD protection.
⇨ Do not touch contacts.
⇨ Wear conductive workwear.
⇨ Use ESD transport protection.
⇨ Use ESD protective packaging.

1. Loosen seven M8 torx screws (´) *27.010/025* until they touch the loss-prevention device.

2. Loosen three M8 torx screws (2) *27.010/025* until they touch the loss-prevention device.

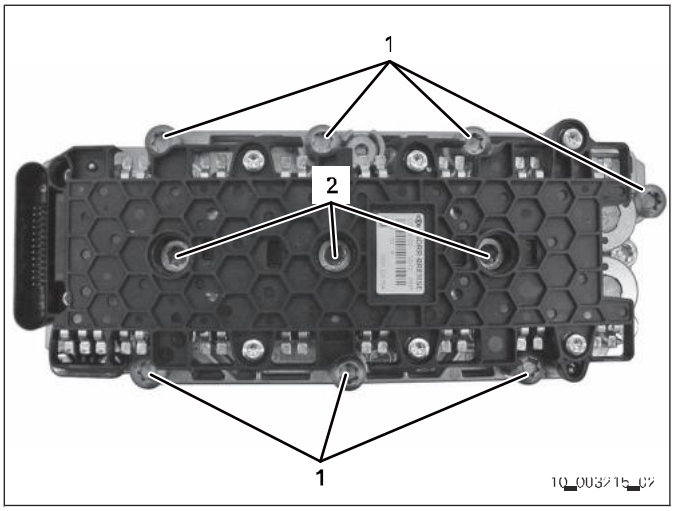

Fig. 37

3. Lift the valve block (1) *27.010* and, in doing so, do not touch the plug, solenoid valves or pressure sensor contacts.

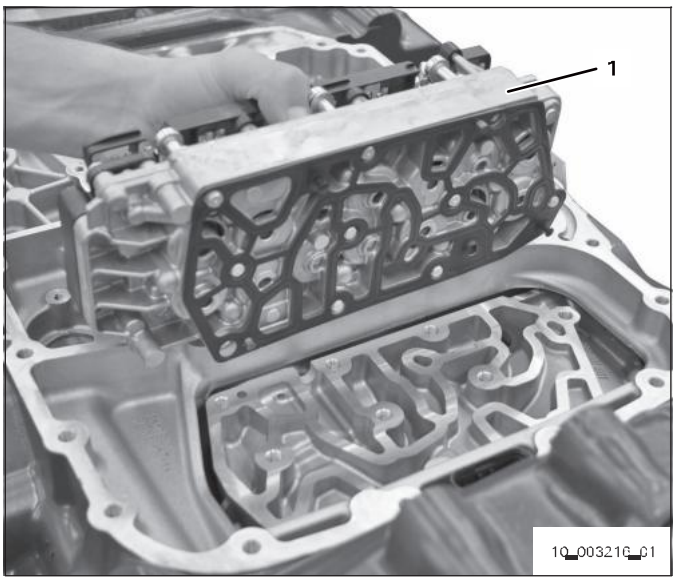

Fig. 38

4. Remove two pins (1) *27.010/015*.

5. Remove gasket (2) *27.010/015*.

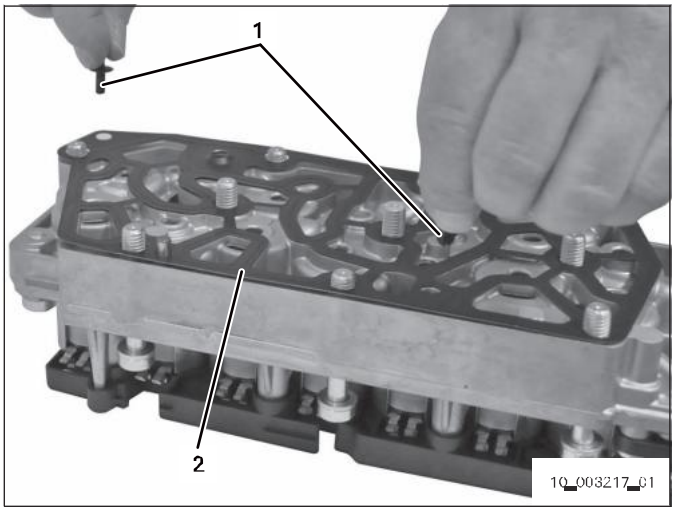

Fig. 39

12.3.2 Installing the valve block

NOTICE

Property damage due to electrostatic discharge (ESD) possible.

⇨ Observe ESD protection.
⇨ Do not touch contacts.
⇨ Wear conductive workwear.
⇨ Use ESD transport protection.
⇨ Use ESD protective packaging.

1. Clean sealing faces.

2. Fit new gasket (2) *27.010/015*.

3. Install flat seal with two new pins (1) *27.010/015*.

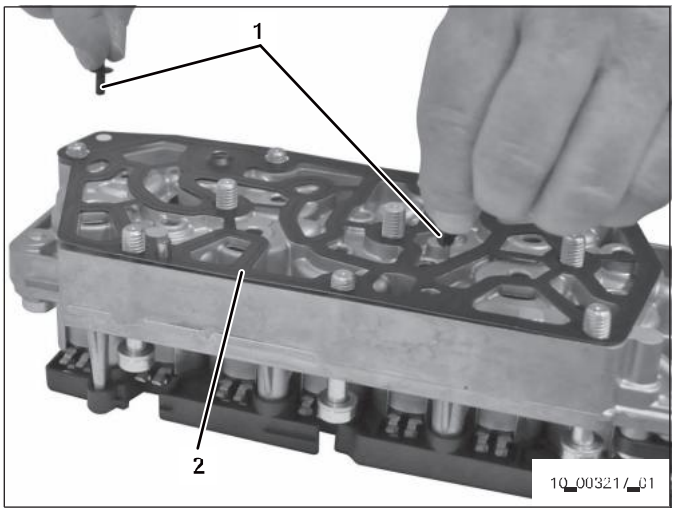

Fig. 40

4. Position the valve block (1) *27.010* and, in doing so, do not touch the plug, solenoid valves or pressure sensor contacts.

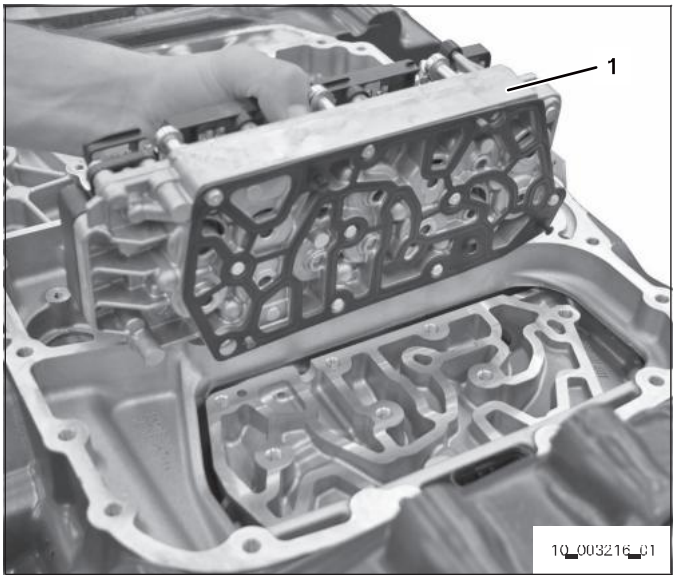

Fig. 41

5. Screw in and tighten three M8 torx screws (2) *27.010/025*.
Tightening torque: **23 Nm**

6. Screw in and tighten seven M8 torx screws (1) *27.010/025*.
Tightening torque: **23 Nm**

7. Retighten three M8 torx screws (2) *27.010/025*.
Tightening torque: **23 Nm**

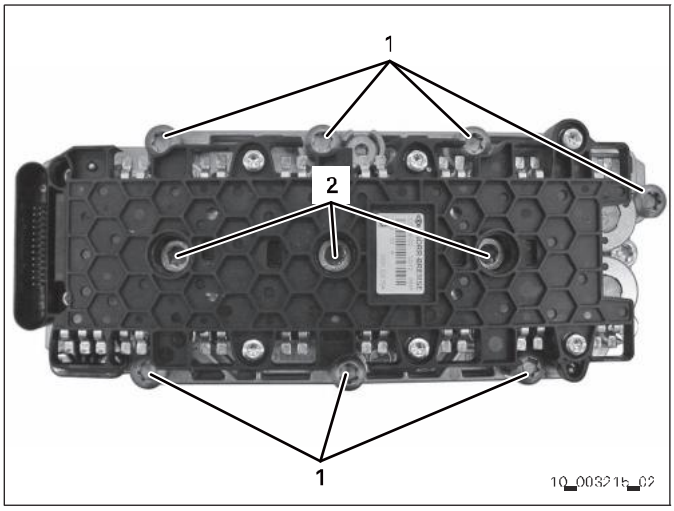

Fig. 42

12.4 Replace the sensor module

12.4.1 Removing the sensor module

Requirements:

- Transmission control has been removed (refer to Section Removing the transmission control).

NOTICE

Property damage due to electrostatic discharge (ESD) possible.

⇨ Observe ESD protection.
⇨ Do not touch contacts.
⇨ Wear conductive workwear.
⇨ Use ESD transport protection.
⇨ Use ESD protective packaging.

1. Loosen the ten torx screws *27.030/015* by hand in the specified order until they touch the loss-prevention device.

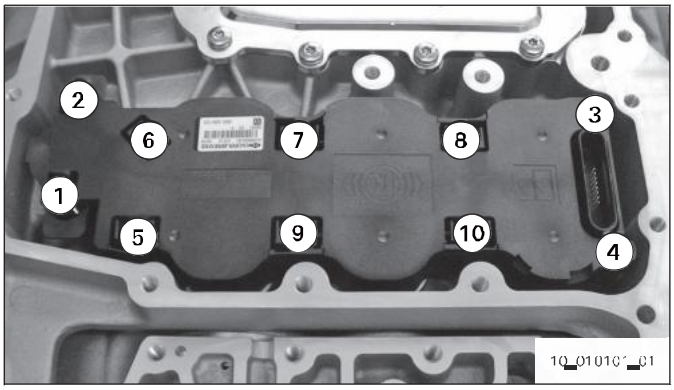

Fig. 43

2. Lift the sensor module (2) *27.030* and loosen the 10 torx screws (1) *27.030/015* by hand, until you can lift the sensor module (2) *27.030* out.

3. Remove the sensor module (2) *27.030*.

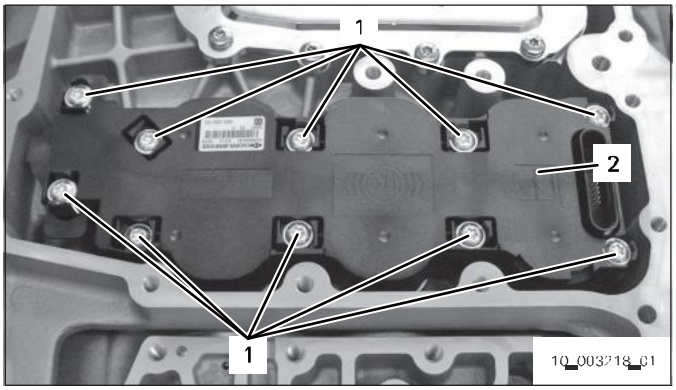

Fig. 44

4. Remove the O-ring (3) *27.030/015* and three seals (2) *27.030/015*.

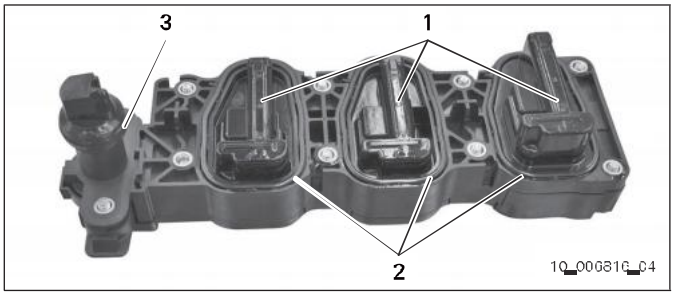

Fig. 45

12.4.2 Installing the sensor module

Operating supplies and auxiliary materials:

- 0671.190.009 RENOLIT CX-FO 20

- 0671.190.148 RENOLIT 283 EP2
- 06/1.190.10/ RENOLIT CX-EP2

NOTICE

Property damage due to electrostatic discharge (ESD) possible.

⇨ Observe ESD protection.
⇨ Do not touch contacts.
⇨ Wear conductive workwear.
⇨ Use ESD transport protection.
⇨ Use ESD protective packaging.

1. Clean sealing faces (1).

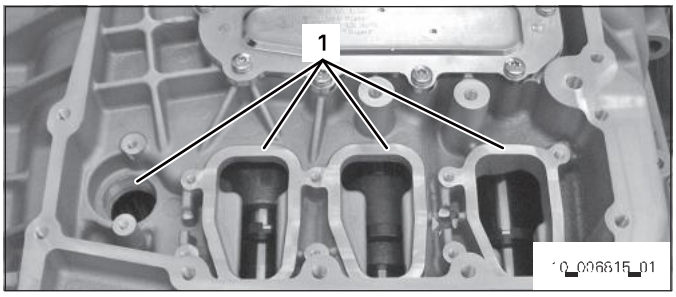

Fig. 46

2. Clean the sensor surfaces (1).

3. Insert a new O-ring (3) *27.030/015* and three new seals (2) *27.030/015*.

4. Apply a thin layer of 06/1.190.009 [RENOLIT CX-FO 20], 0671.190.148 [RENOLIT 283 EP2] or 0671.190.107 [RENOLIT CX-EP2] to the O-ring (1) *27.030/015*.

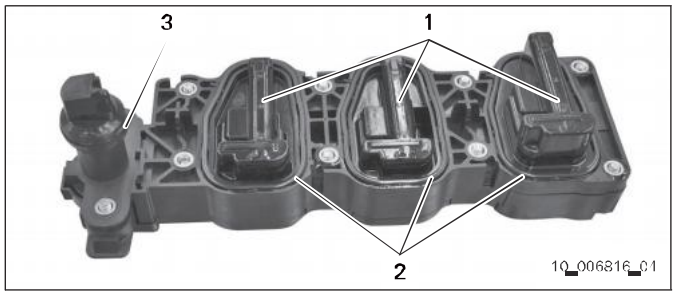

Fig. 47

5. Position the sensor module (2) *27.030*.

6. Carefully screw in ten torx screws (1) *27.030/015* by hand until firmly home.

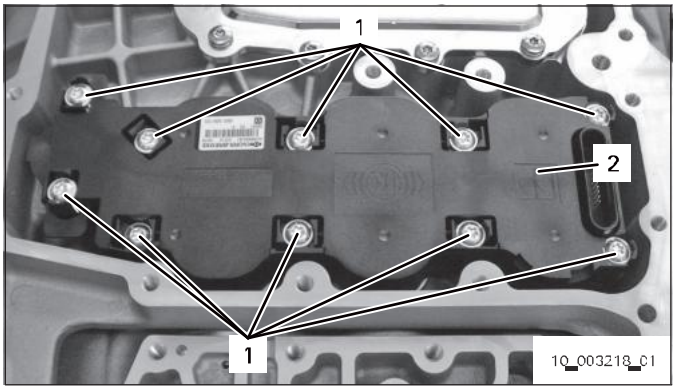

Fig. 48

7. Tighten the ten torx screws *27.030/015* according to specified order.
Tightening torque: **9.5 Nm**

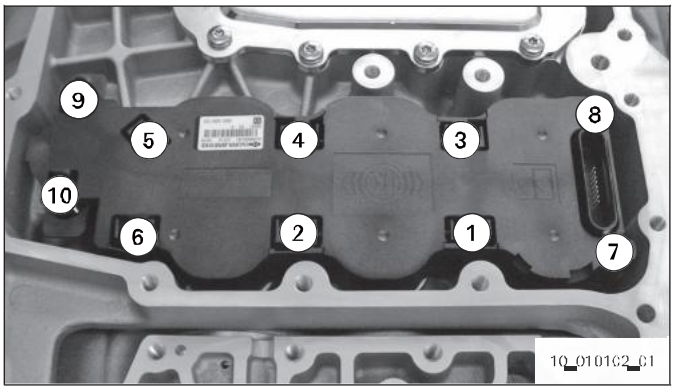

Fig. 49

12.5 Replacing the selector actuator

12.5.1 Removing the selector actuator – model range 12

Requirements:

- Transmission control has been removed *(refer to Section Removing the transmission control).*

NOTICE

Property damage due to electrostatic discharge (ESD) possible.

⇨ Observe ESD protection.
⇨ Do not touch contacts.
⇨ Wear conductive workwear.
⇨ Use ESD transport protection.
⇨ Use ESD protective packaging.

1. M6x22 cap screws are secured against falling out with an elastomer ring in the selector actuator.

Unscrew the nine M6x22 cap screws (1) *27.040/025* by hand.

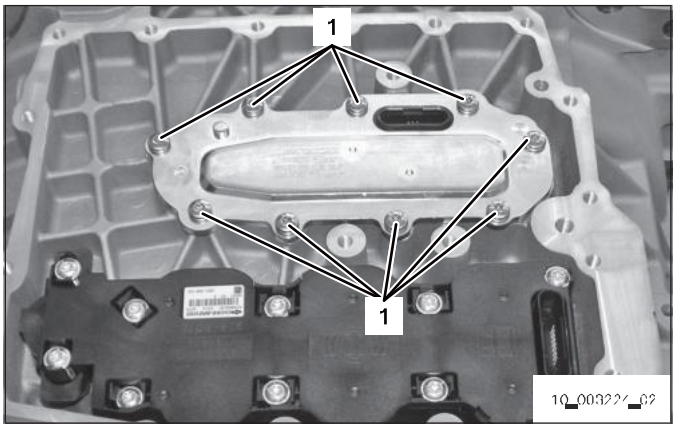

Fig. 50

2. Remove the selector actuator (1) *27.040* with the gasket (2) *27.040/015*.

3. Remove the gasket (2) *27.040/015* from the selector actuator (1) *27.040*.

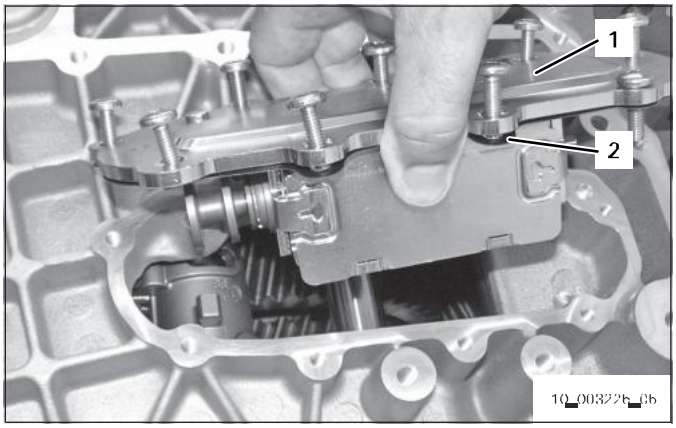

Fig. 51

12.5.2 Installing the selector actuator – model range 12

NOTICE

Property damage due to electrostatic discharge (ESD) possible.

⇨ Observe ESD protection.
⇨ Do not touch contacts.
⇨ Wear conductive workwear.
⇨ Use ESD transport protection.
⇨ Use ESD protective packaging.

1. Compare the material number for the selector actuator (1) *27.040* with the parts list [BoM].

   → The material numbers match.

2. Clean sealing faces.

3. Place a new gasket (2) *27.040/015* on the sealing surface of the selector actuator (1) *27.040* and press it on.

4. Pull the piston rod (4) out as far as it will go, see arrow.

5. Turn the driver (3) of the gearshift rail outwards until the limit stop is reached, see arrow.

6. Insert the selector actuator (1) *27.040*.

   → The driver (3) of the gearshift rail engages with the piston rod (4).

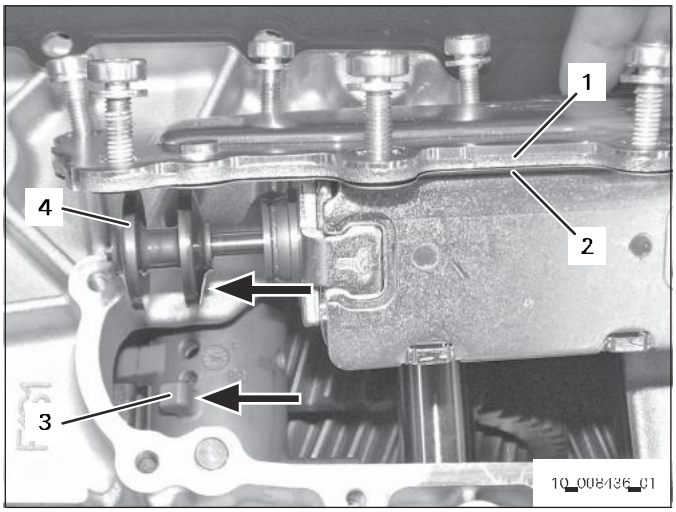

Fig. 52

7. Carefully screw in the nine M6x22 cap screws (1) *27.040/025* by hand until they reach the limit stop.

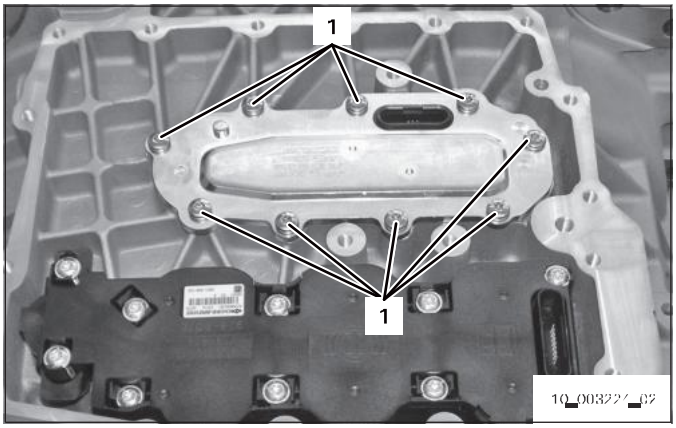

Fig. 53

8. Tighten all screws crosswise twice.

   Tighten M6x22 cap screw (2) *27.040/025* for the first time.
   Tightening torque: **4.5 Nm**

9. Tighten the eight M6x22 cap screws (1) *27.040/025* for the first time crosswise to the M6x22 cap screw (2) *27.040/025*.
   Tightening torque: **4.5 Nm**

10. Tighten M6x22 cap screw (2) *27.040/025* for the second time.
    Tightening torque: **14 Nm**

11. Tighten the eight M6x22 cap screws (1) *27.040/025* for the second time crosswise to the M6x22 cap screw (2) *27.040/025*.
    Tightening torque: **14 Nm**

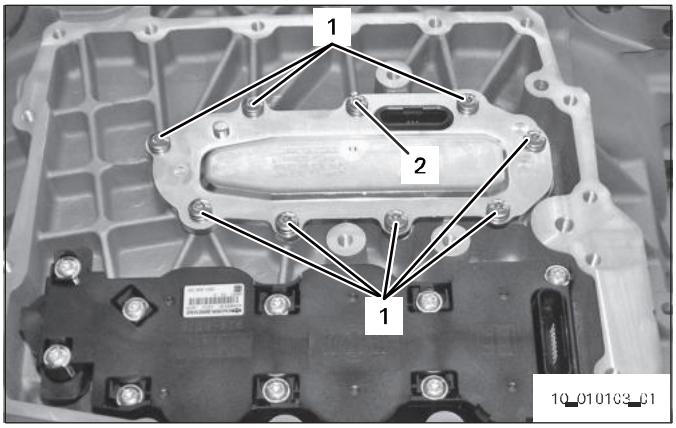

Fig. 54

12.5.3 Removing the selector actuator – model range 16

Requirements:

- Transmission control has been removed *(refer to Section Removing the transmission control)*.

NOTICE

Property damage due to electrostatic discharge (ESD) possible.

⇨ Observe ESD protection.
⇨ Do not touch contacts.
⇨ Wear conductive workwear.
⇨ Use ESD transport protection.
⇨ Use ESD protective packaging.

1. M6x22 cap screws are secured against falling out with an elastomer ring in the selector actuator.

   Unscrew the nine M6x22 cap screws (1) *27.040/025* by hand.

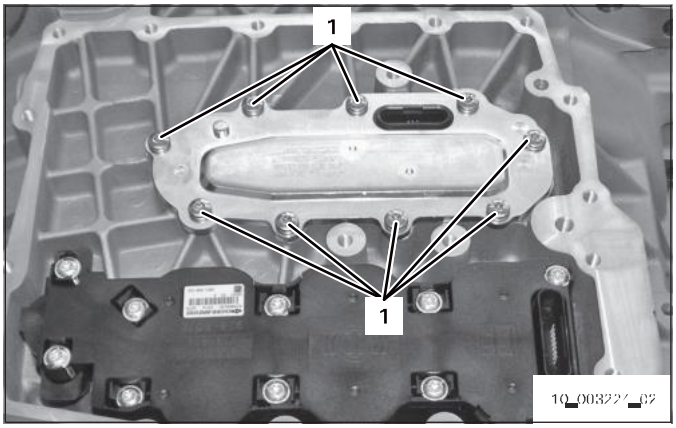

Fig. 55

2. Remove the selector actuator (1) *27.040* with the gasket (2) *27.040/015*.

3. Remove the gasket (2) *27.040/015* from the selector actuator (1) *27.040*.

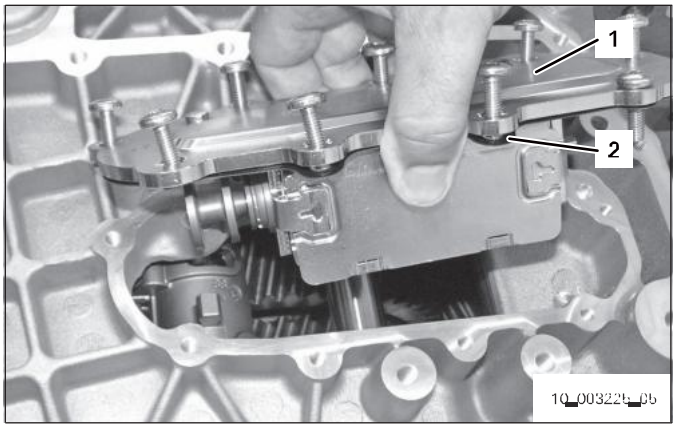

Fig. 56

4. Remove the splash guard (1) *27.042*.

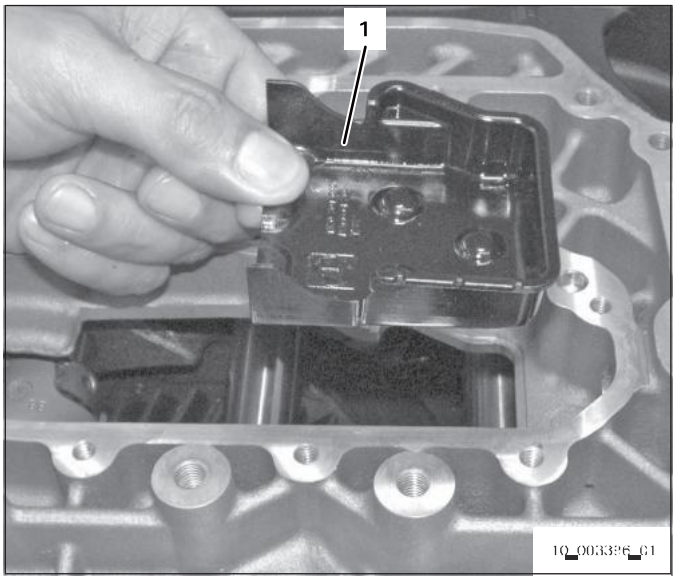

Fig. 57

12.5.4 Installing the selector actuator – model range 16

NOTICE

Property damage due to electrostatic discharge (ESD) possible.

⇨ Observe ESD protection.
⇨ Do not touch contacts.
⇨ Wear conductive workwear.
⇨ Use ESD transport protection.
⇨ Use ESD protective packaging.

1. Insert the splash guard (1) *27.042*.

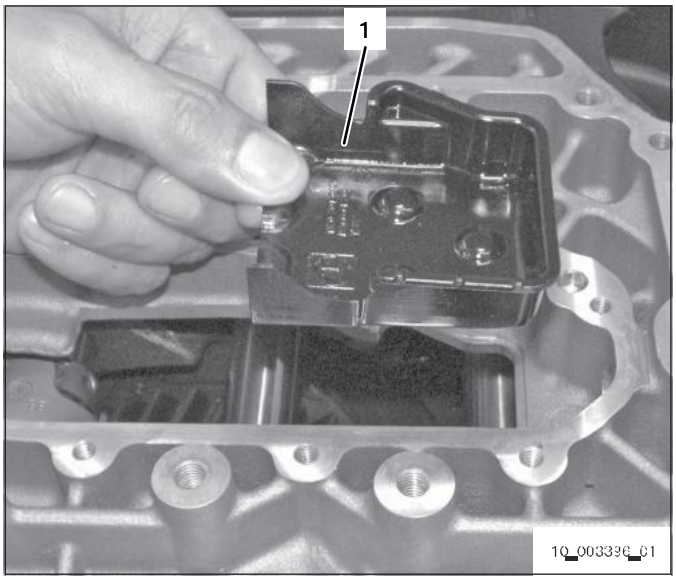

Fig. 58

2. Compare the material number for the selector actuator (1) *27.040* with the parts list [BoM].

   → The material numbers match.

3. Clean sealing faces.

4. Place a new gasket (2) *27.040/015* on the sealing surface of the selector actuator (1) *27.040* and press it on.

5. Pull the piston rod (4) out as far as it will go, see arrow.

6. Turn the driver (3) of the gearshift rail outwards until the limit stop is reached, see arrow.

7. Insert the selector actuator (1) *27.040*.

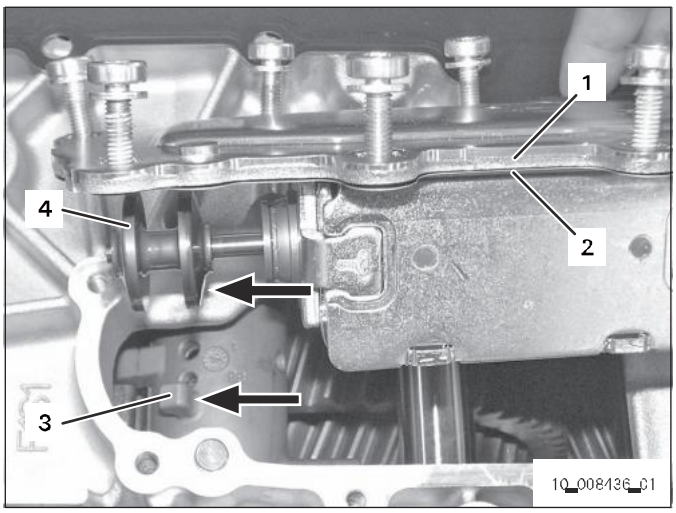

Fig. 59

→ The driver (3) of the gearshift rail engages with the piston rod (4).

8. Carefully screw in the nine M6x22 cap screws (1) *27.040/025* by hand until they reach the limit stop.

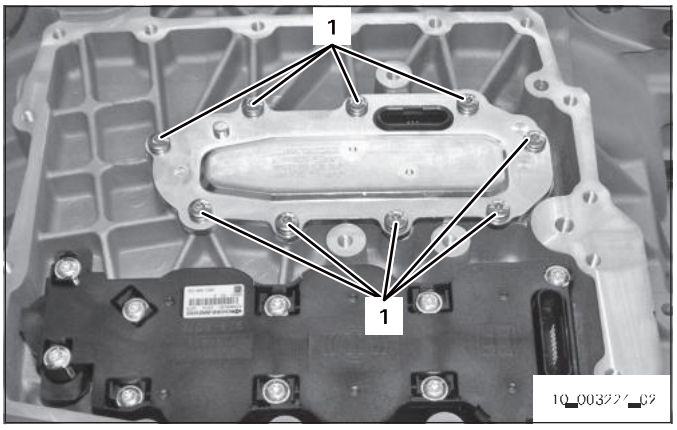

Fig. 60

9. Tighten all screws crosswise twice.

Tighten M6x22 cap screw (2) *27.040/025* for the first time.
Tightening torque: **4.5 Nm**

10. Tighten the eight M6x22 cap screws (1) *27.040/025* for the first time crosswise to the M6x22 cap screw (2) *27.040/025*.
Tightening torque: **4.5 Nm**

11. Tighten M6x22 cap screw (2) *27.040/025* for the second time.
Tightening torque: **14 Nm**

12. Tighten the eight M6x22 cap screws (1) *27.040/025* for the second time crosswise to the M6x22 cap screw (2) *27.040/025*.
Tightening torque: **14 Nm**

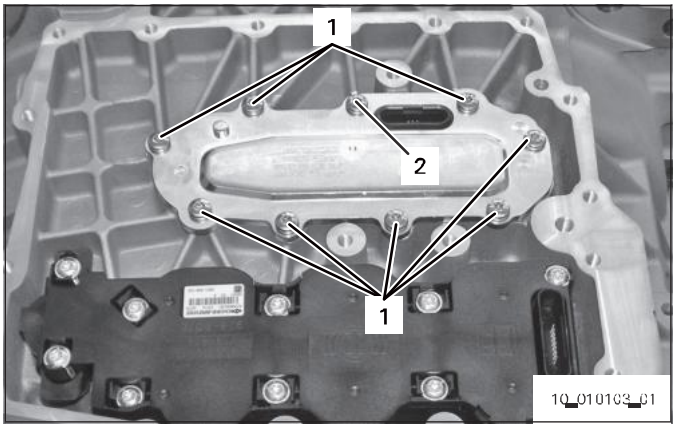

Fig. 61

12.6 Replacing the TRAXON cable for the transmission control unit

12.6.1 Removing the TRAXON cable

Requirements:

- Ignition is off.
- Battery is disconnected.
- Plug connections are clean.

NOTICE

Property damage due to electrostatic discharge (ESD) possible.

⇨ Observe ESD protection.
⇨ Do not touch contacts.
⇨ Wear conductive workwear.
⇨ Use ESD transport protection.
⇨ Use ESD protective packaging.

1. Detach the TRAXON (1) *27.060* cable from the two cable clamps (2, 4) *27.062, 31.880.*

2. Loosen the M8x16 hexalobular driving screws (3) *31.882* and remove them together with the cable clamp (4) *31.880.*

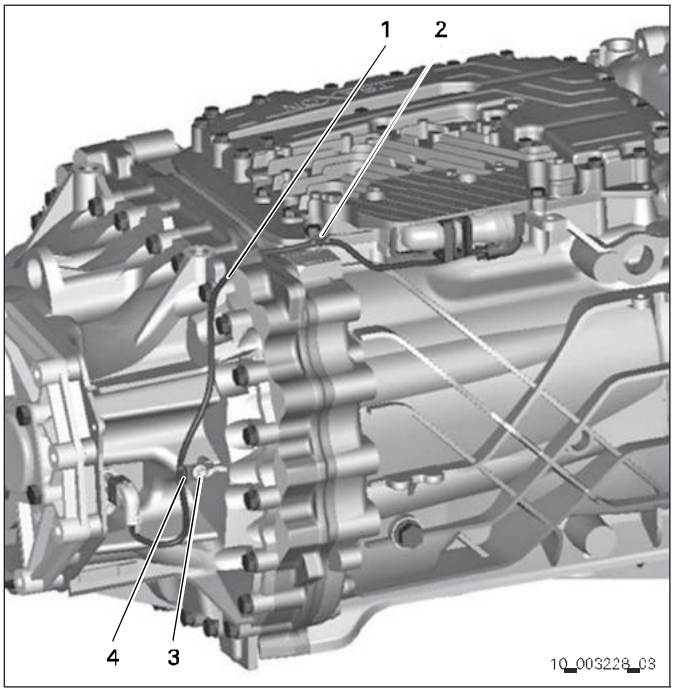

Fig. 62

3. With a screwdriver, carefully push forward locking slide (2) of plug (1) of TRAXON cable *27.060* to the stop.

4. Remove plug (1) of TRAXON cable *27.060* from transmission control.

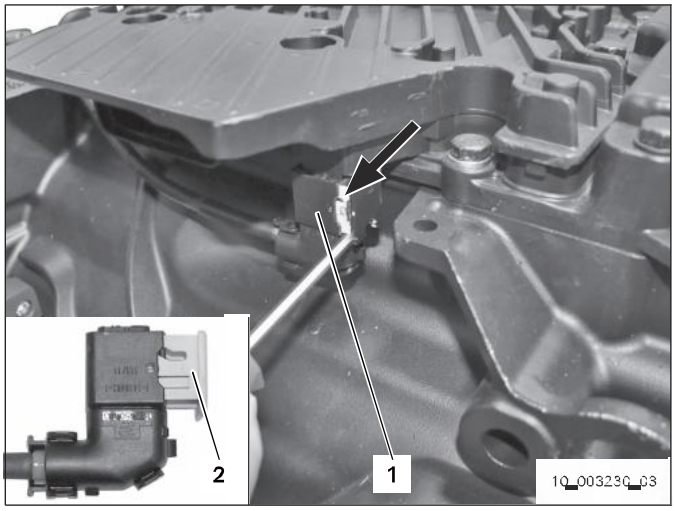

Fig. 63

5. With a screwdriver, carefully push forward locking slide (2) of plug (1) of TRAXON cable *27.060* to the stop.

6. Remove the plug (1) of the TRAXON cable *27.060* from the speed sensor.

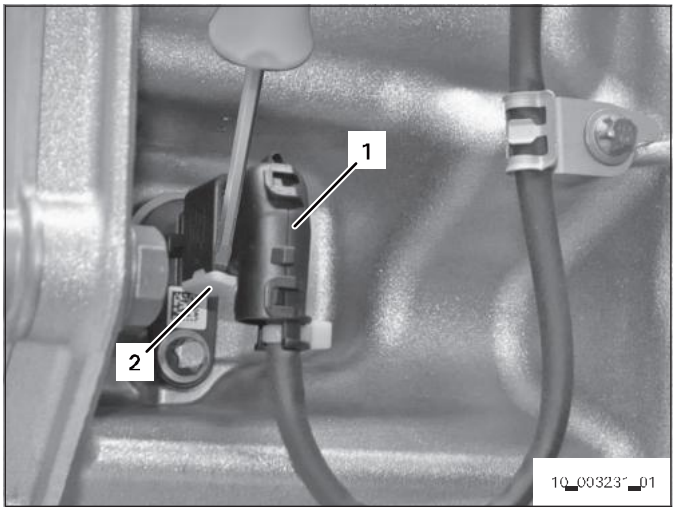

Fig. 64

12.6.2 Installing the TRAXON cable

Requirements:

- Transmission control has been installed *(refer to Section Installing the transmission control)*.
- Speed sensor is installed *(refer to Section Installing the transmission control)*.

NOTICE

Property damage due to electrostatic discharge (ESD) possible.

⇨ Observe ESD protection.
⇨ Do not touch contacts.
⇨ Wear conductive workwear.
⇨ Use ESD transport protection.
⇨ Use ESD protective packaging.

1. Anchor the new cable clamp (4) *31.880* with an M8x16 hexalobular driving screw (3) *31.882*.
   Tightening torque: **9.5 Nm**

2. Insert the TRAXON cable (1) *27.060* into the two cable clamps (2, 4) *27.062, 31.880*.

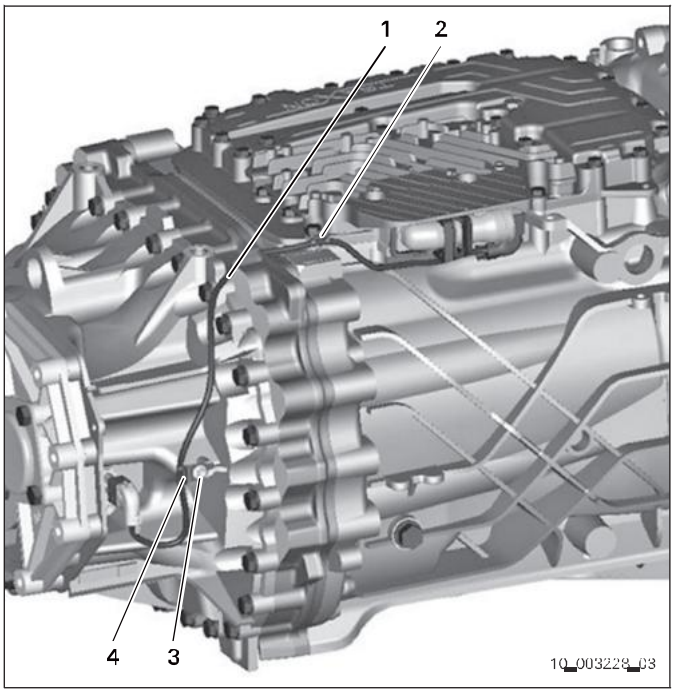

Fig. 65

3. Insert connector (1) of TRAXON cable *27.060* into transmission control in a strain-relieved way.

4. Push connector (1) of TRAXON cable *27.060* in transmission control until firmly home and lock locking slide (2) of the connector (1) of TRAXON cable *27.060*.

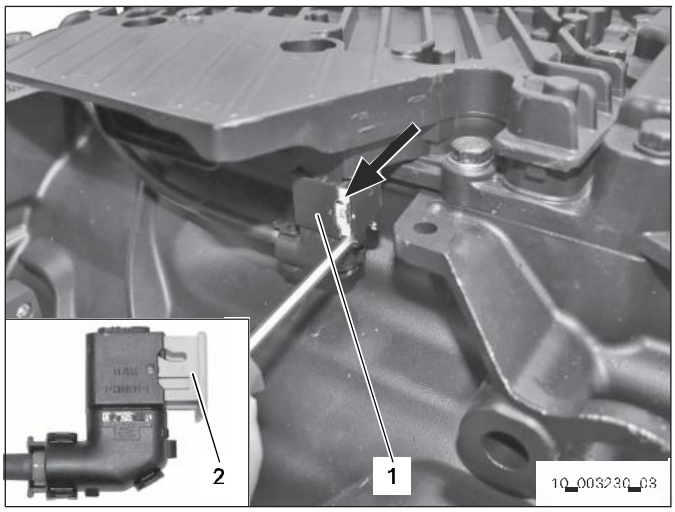

Fig. 66

5. Insert the plug (1) of the TRAXON cable *27.060* into speed sensor in a strain-relieved way.

6. Push the plug (1) of the TRAXON cable *27.060* into the speed sensor until firmly home and lock the locking slide (2) of the plug (1) for the TRAXON cable *27.060*.

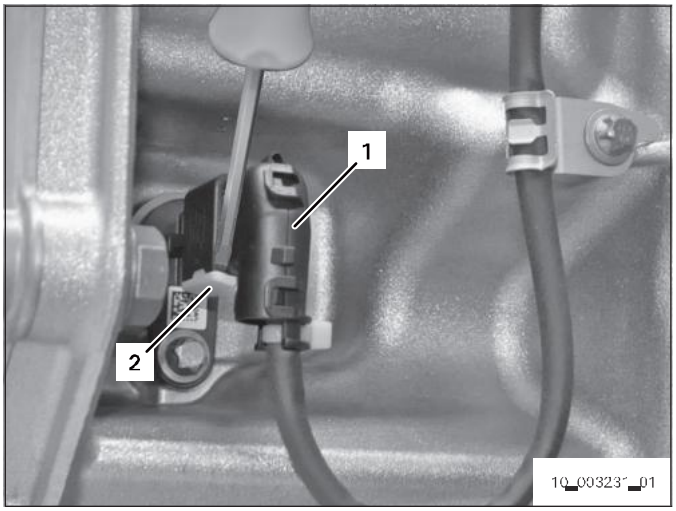

Fig. 67

12.7 Replacing the speed sensor

12.7.1 Removing the speed sensor

Requirements:

- The TRAXON cable has been removed *(refer to Section Removing the TRAXON cable)*.
- Plug connection has been cleaned.

NOTICE

Property damage due to electrostatic discharge (ESD) possible.

⇨ Observe ESD protection.
⇨ Do not touch contacts.
⇨ Wear conductive workwear.
⇨ Use ESD transport protection.
⇨ Use ESD protective packaging.

1. Loosen and remove the M6x16 hexalobular driving screw (1) *71.033*.

2. Remove speed sensor (2) *71.031*.

3. Remove the O-ring (3) *71.031/015* from the speed sensor (2) *71.031*.

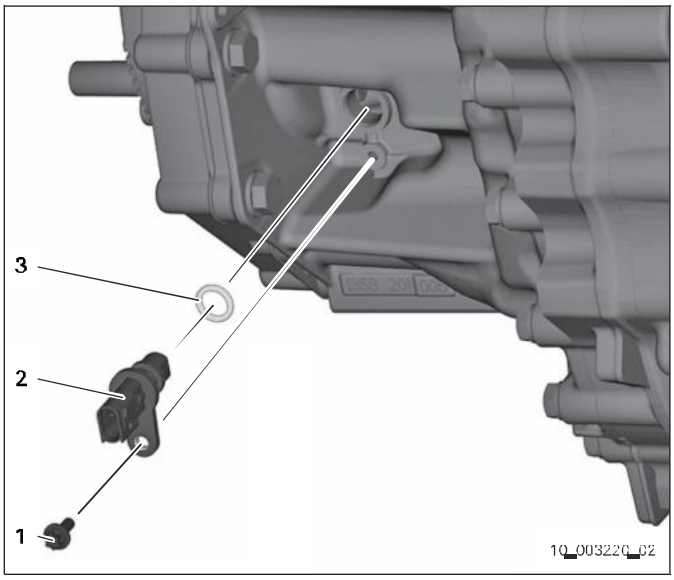

Fig. 68

12.7.2 Installing the speed sensor

Operating supplies and auxiliary materials:

- 0671.190.009 RENOLIT CX-FO 20
- 0671.190.148 RENOLIT 283 EP2
- 0671.190.107 RENOLIT CX-EP2

NOTICE

Property damage due to electrostatic discharge (ESD) possible.

⇨ Observe ESD protection.
⇨ Do not touch contacts.
⇨ Wear conductive workwear.
⇨ Use ESD transport protection.
⇨ Use ESD protective packaging.

1. Insert a new O-ring (3) *71.031/015* into the speed sensor (2) *71.031*.

2. Apply a thin layer of 0671.190.009 [RENOLIT CX-HO 20], 0671.190.148 [RENOLIT 283 EP2] or 0671.190.107 [RENOLIT CX-EP2] to the O-ring (3) *71.031/015*.

3. Insert speed sensor (2) *71.031*.

4. Screw in M6x16 hexalobular driving screw (1) *71.033* and tighten.
   Tightening torque: **9.5 Nm**

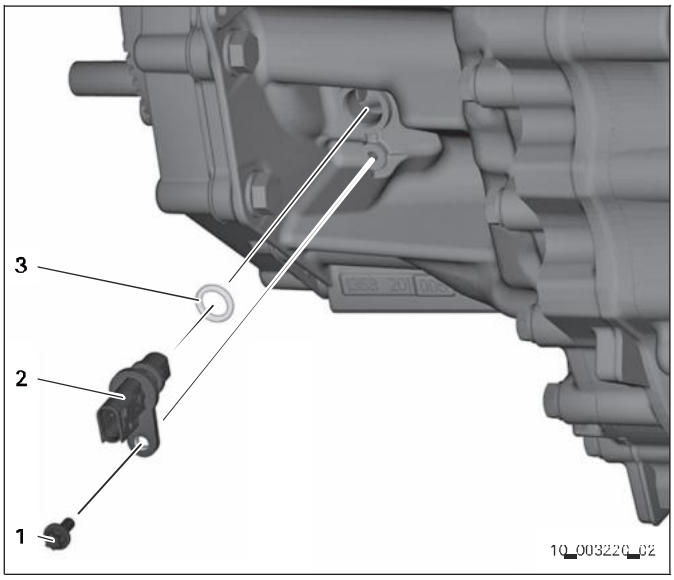

Fig. 69

12.8 Replacing the speedometer impulse sensor

12.8.1 Removing the impulse sensor – version without INTARDER

Requirements:
- Ignition is off.
- Battery is disconnected.
- Plug connection has been cleaned.

NOTICE

Property damage due to electrostatic discharge (ESD) possible.
⇨ Observe ESD protection.
⇨ Do not touch contacts.
⇨ Wear conductive workwear.
⇨ Use ESD transport protection.
⇨ Use ESD protective packaging.

1. Unfasten and remove impulse sensor (1) *31.341*.

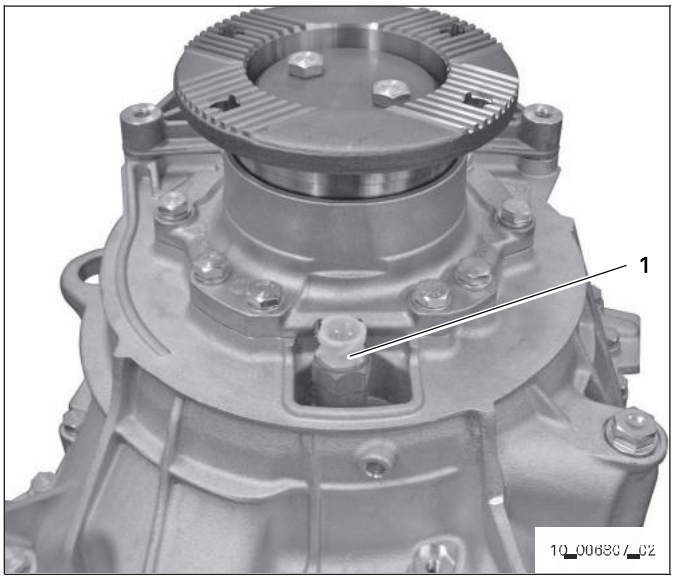

Fig. 70

12.8.2 Installing the impulse sensor – version without INTARDER

- Do not apply any sealing compound to the impulse sensor.
- Calibrate the replaced impulse sensor.

NOTICE

Property damage due to electrostatic discharge (ESD) possible.

⇨ Observe ESD protection.
⇨ Do not touch contacts.
⇨ Wear conductive workwear.
⇨ Use ESD transport protection.
⇨ Use ESD protective packaging.

1. Screw in impulse sensor (1) *31.341* and tighten.
   Tightening torque: **45 Nm**

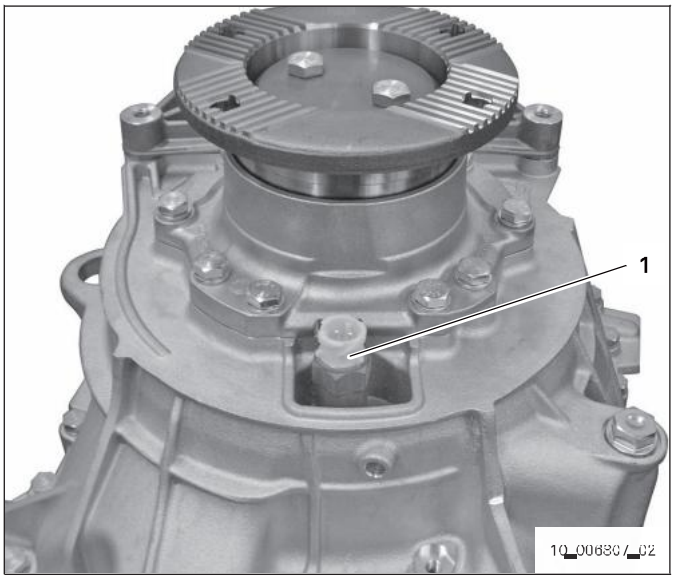

Fig. 71

12.8.3 Removing the impulse sensor – version with INTARDER

Requirements:

- Ignition is off.
- Battery is disconnected.
- Plug connection has been cleaned.

NOTICE

Property damage due to electrostatic discharge (ESD) possible.

⇨ Observe ESD protection.
⇨ Do not touch contacts.
⇨ Wear conductive workwear.
⇨ Use ESD transport protection.
⇨ Use ESD protective packaging.

1. Unfasten and remove impulse sensor (1) *31.341*.

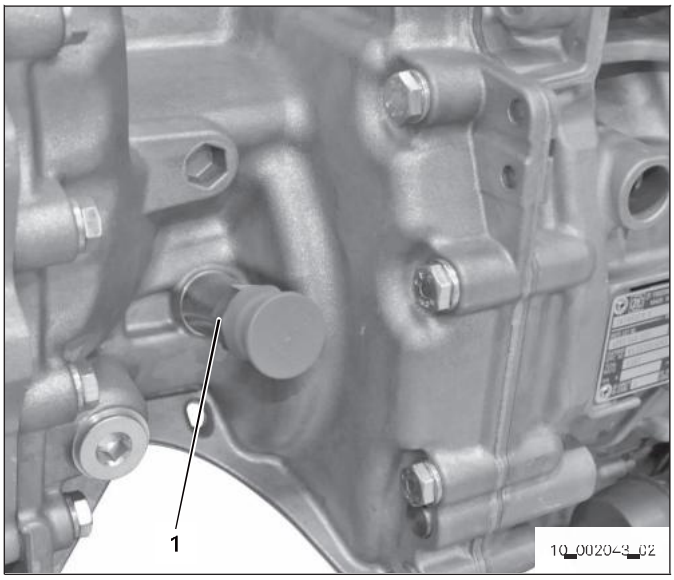

Fig. 72

12.8.4 Installing the impulse sensor – version with INTARDER

- Do not apply any sealing compound to the impulse sensor.
- Calibrate the replaced impulse sensor.

NOTICE

Property damage due to electrostatic discharge (ESD) possible.

⇨ Observe ESD protection.
⇨ Do not touch contacts.
⇨ Wear conductive workwear.
⇨ Use ESD transport protection.
⇨ Use ESD protective packaging.

1. Screw in impulse sensor (1) *31.341* and tighten.
   Tightening torque: **45 Nm**

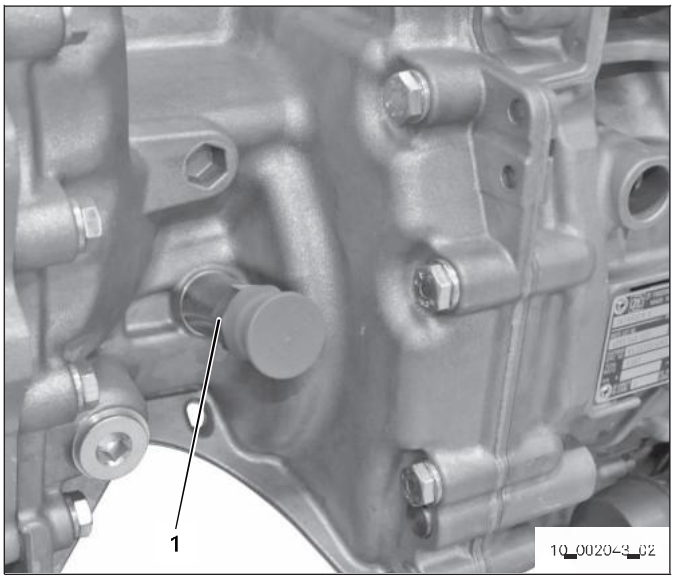

Fig. 73

12.9 Replacing the oil/coolant heat exchanger

12.9.1 Removing the oil/coolant heat exchanger

There is **no** possibility on the heat exchanger directly to drain the oil and the coolant from the heat exchanger and the pipelines prior to removal.

Requirements:

- Ignition is off.
- Battery is disconnected.
- Protective measures for leaking oil and coolant have been taken.
- Oil has been drained *(refer to Section Draining oil)*.
- Coolant has been drained in accordance with the vehicle manufacturer's specifications.
- Clamps and coolant hoses have been removed from the heat exchanger.

During removal, oil and coolant might escape. Drain liquid into suitable container.

Observe safety instructions for operating supplies and auxiliary materials *(refer to Section General safety instructions)*.

1. Loosen the three M10x85 hexagon screws (2) *47.210/100–47.210/120* and remove them together with the washers.

2. Remove heat exchanger (1) *47.200*.
   If required, use two pry bars.

3. Loosen and remove the two M24x1.5 hollow screws (5, 8) *47.210/080, 47.210/090*.

4. Remove the two O-rings (7, 9) *47.210/082, 47.210/084* from the M24x1.5x124 hollow screw (8) *47.210/080*.

5. Remove the two O-rings (4, 6) *47.210/092, 47.210/094* from the M24x1.5x86 hollow screw (5) *47.210/090*.

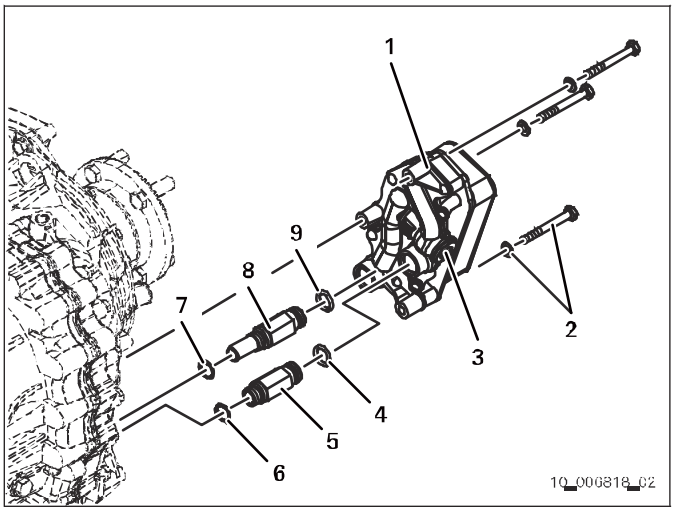

Fig. 74

12.9.2 Installing the oil/coolant heat exchanger

Requirements:
- Supporting surfaces are clean.
- For retrofitting: Transmission is prepared for retrofitting *(refer to Section Preparing for retrofitting of the oil/coolant heat exchanger)*.

Operating supplies and auxiliary materials:
- 0671.190.158 COXTEC 5141

1. Insert the two O-rings (7, 9) *47.210/082, 47.210/084* into the M24x1.5x124 hollow screw (8) *47.210/080*.

2. Insert the two O-rings (4, 6) *47.210/092, 47.210/094* into the M24x1.5x86 hollow screw (5) *47.210/090*.

3. Screw in the two M24x1.5 hollow screws (5, 8) *47.210/080, 47.210/090* and tighten them.
   Tightening torque: **60 Nm**

4. Apply approx. 0.3 g 0671.190.158 [COXTEC 5141] to the inside of the bores for the M24x1.5 hollow screws (5, 8) *47.210/080, 47.210/090* for the heat exchanger (1) *47.200*.

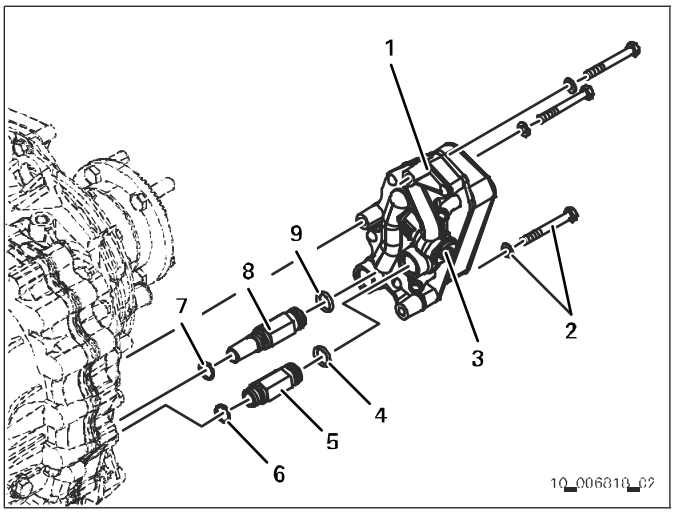

Fig. 75

5. Push the heat exchanger (1) *47.200* with the bores onto the M24x1.5 hollow screws (5, 8) *47.210/080, 47.210/090*.

   The heat exchanger must lie flat on the transmission housing.

6. Screw in and tighten the three M10x85 hexagon screws (1) *47.210/100–47.210/120* with washers.
   Tightening torque: **46 Nm**

7. Retighten the four M8x25 torx screws (2) *47.200/130–47.200/160*.
   Tightening torque: **23 Nm**

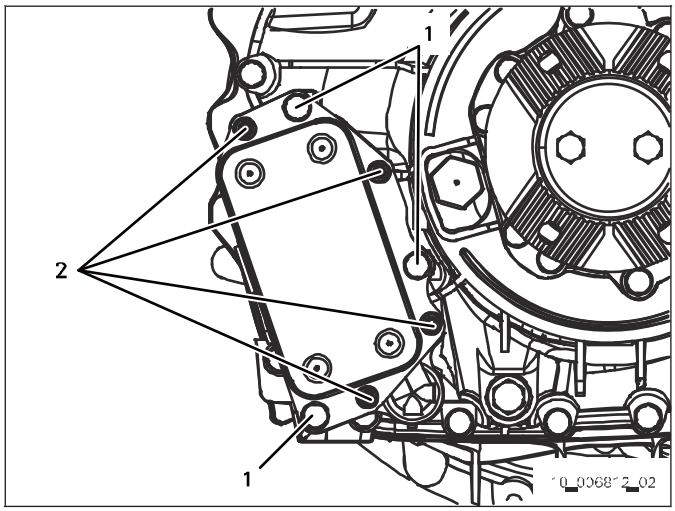

Fig. 76

8. Retighten the M30x1.5 screw plug (3) *47.200/070*.
   Tightening torque: **80 Nm**

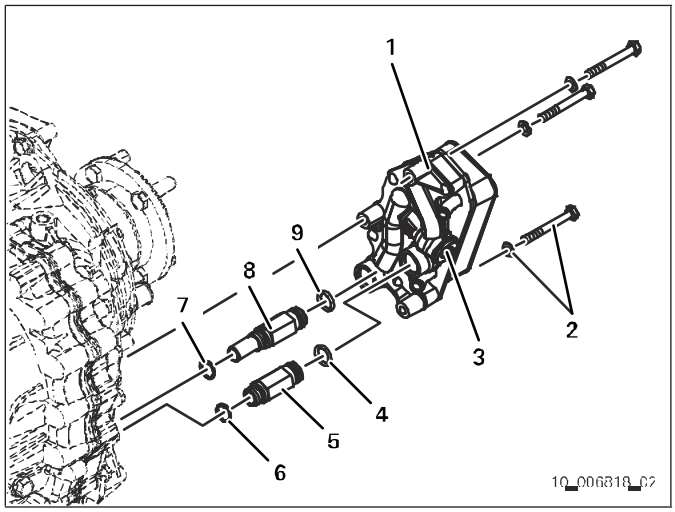

Fig. 77

12.10 Replacing the oil-air heat exchanger valve block

12.10.1 Removing the oil-air heat exchanger valve block

There is no possibility on the heat exchanger directly to drain the oil from the heat exchanger prior to removal.

Requirements:
- Ignition is off.
- Battery is disconnected.
- Protective measures for leaking oil have been taken.

- Oil has been drained *(refer to Section Draining oil)*.

Oil may leak when this is removed. Drain escaping oil into suitable container.

Observe safety instructions for operating supplies and auxiliary materials *(refer to Section General safety instructions)*.

1. Loosen the three M10x95 hexagon screws (3) *47.210/100–47.210/120* and remove them together with the washers (2) *47.210/102–47.210/122*.
2. Remove valve block (1) *47.200*.

   If required, use two pry bars.
3. Loosen and remove the two M24x1.5 hollow screws (6, 9) *47.210/080, 47.210/090*.
4. Remove the two O-rings (8, 10) *47.210/082, 47.210/084* from the M24x1.5x124 hollow screw (9) *47.210/080*.
5. Remove the two O-rings (5, 7) *47.210/092, 47.210/094* from the M24x1.5x86 hollow screw (6) *47.210/090*.

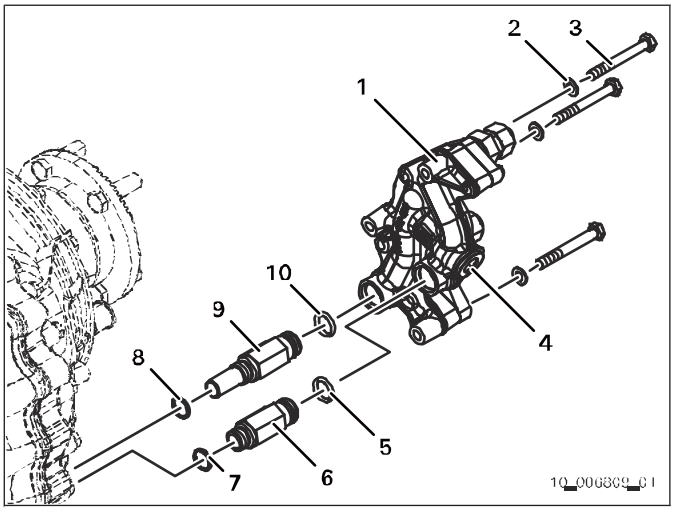

Fig. 78

12.10.2 Installing the oil-air heat exchanger valve block

Requirements:
- Supporting surfaces are clean.
- For retrofitting: Transmission is prepared for retrofitting *(refer to Section Preparing for retrofitting of the oil-air heat exchanger valve block)*.

Operating supplies and auxiliary materials:
- 0671.190.158 COXTEC 5141

1. Insert the two O-rings (8, 10) *47.210/082, 47.210/084* into the M24x1.5x124 hollow screw (9) *47.210/080*.

2. Insert the two O-rings (5, 7) *47.210/092, 47.210/094* into the M24x1.5x86 hollow screw (6) *47.210/090*.

3. Screw in the two M24x1.5 hollow screws (6, 9) *47.210/080, 47.210/090* and tighten them.
   Tightening torque: **60 Nm**

4. Apply approx. 0.3 g 0671.190.158 [COXTEC 5141] to the inside of the bores for the M24x1.5 hollow screws (6, 9) *47.210/080, 47.210/090* for the valve block (1) *47.200*.

5. Push the valve block (1) *47.200* with the bores onto the M24x1.5 hollow screws (6, 9) *47.210/080, 47.210/090*.
   The valve block must lie flat on the transmission housing.

6. Screw in and tighten the three M10x95 hexagon screws (1) *47.210/100–47.210/120* with washers (2) *47.210/102–47.210/122*.
   Tightening torque: **46 Nm**

7. Retighten the four M8x35 torx screws (2) *47.200/130–47.200/160*.
   Tightening torque: **23 Nm**

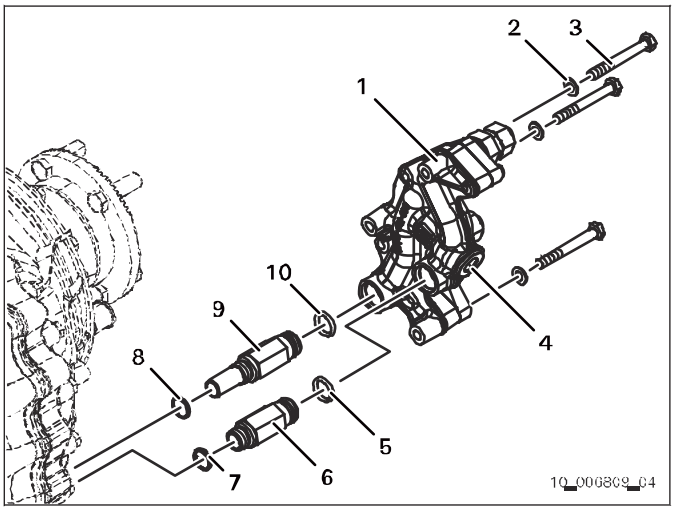

Fig. 79

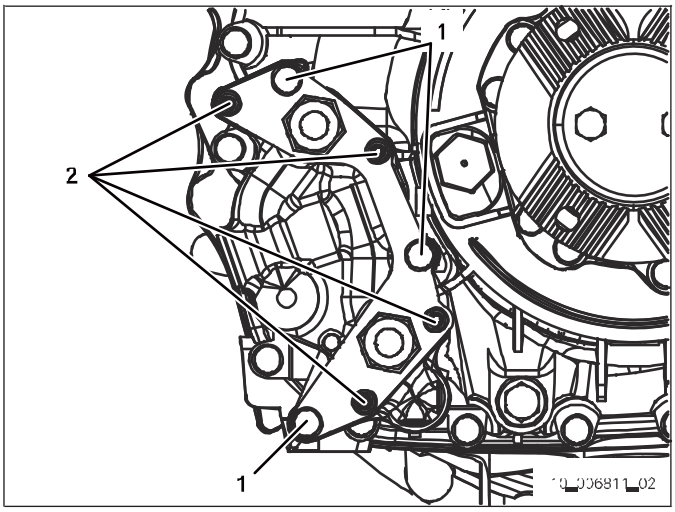

Fig. 80

8. Retighten the M30x1.5 screw plug (4) *47.200/0/0*.
Tightening torque: **80 Nm**

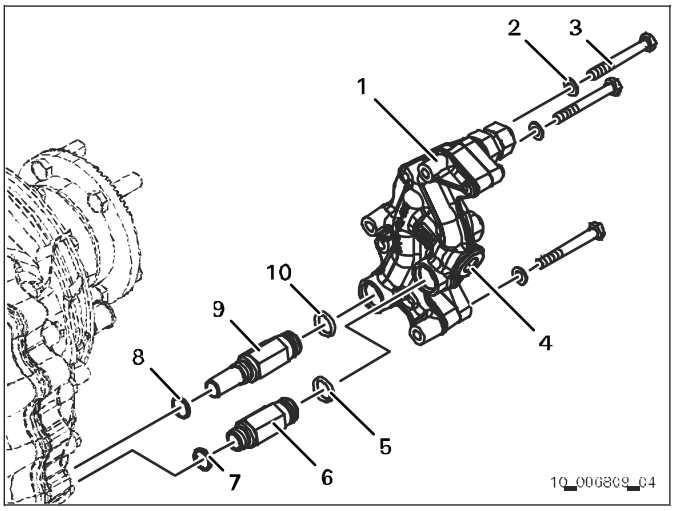

Fig. 81

12.11 Replacing the cover for the PTO connection

The installation instructions for ZF PTOs *(refer to Installation Instructions 6090.754.145)* apply for the installation, removal and subsequent reinstallation of PTOs.

12.11.1 Removing the cover for the PTO connection

Requirements:

- Engine is off.

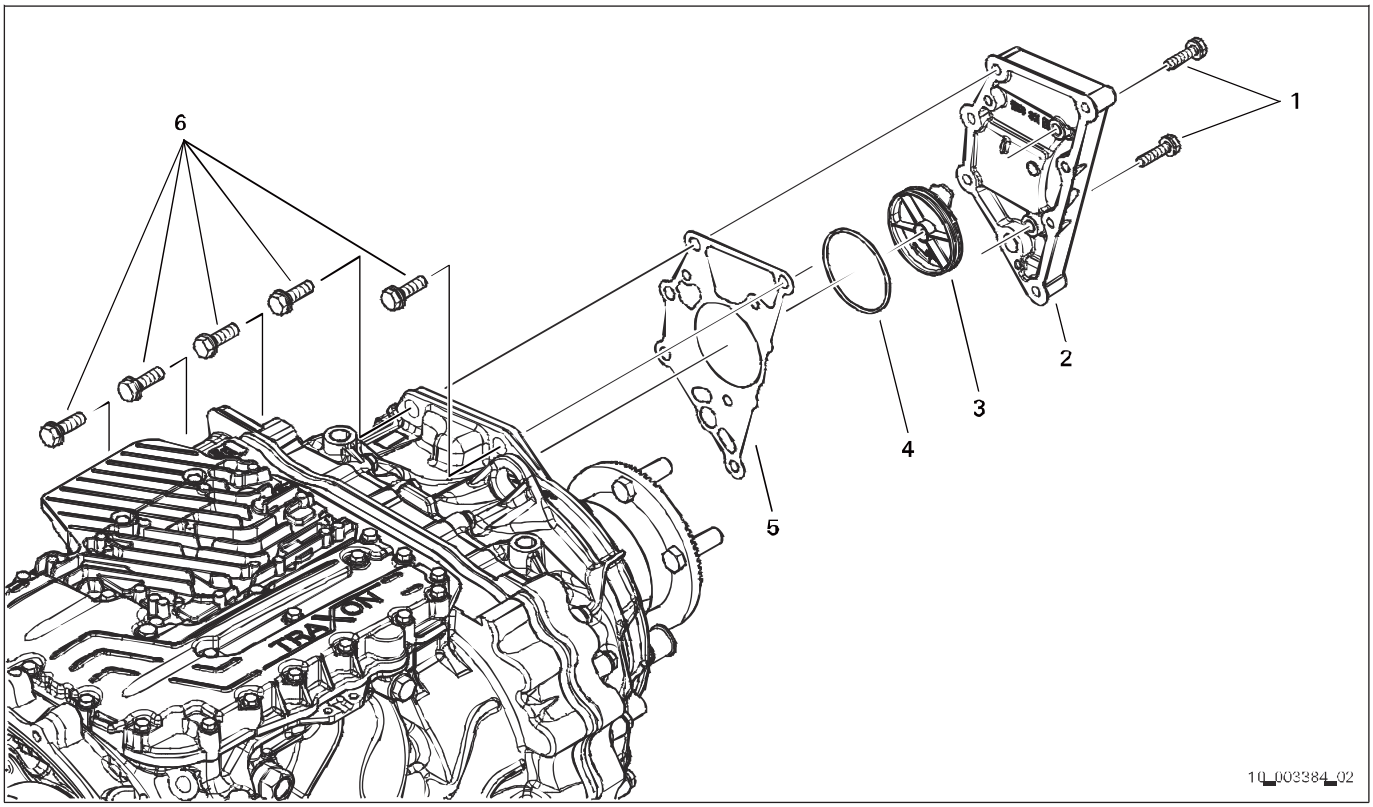

Fig. 82

1. Loosen and remove the five M12x45 screws with washer assembly (6) *31.350–31.390*.
2. Loosen and remove two M10x40 hexagon screws (1) *31.400, 31.410*.
3. Remove cover (2) *31.310*.
4. Remove the plug (3) *31.318*.
5. Remove the O-ring (4) *31.320* on the plug (3) *31.318*.
6. Remove gasket (5) *31.330*.

12.11.2 Installing the cover for the PTO connection

Operating supplies and auxiliary materials:

- 0671.190.009 RENOLIT CX-FO 20
- 0671.190.148 RENOLIT 283 EP2
- 0671.190.107 RENOLIT CX-EP2

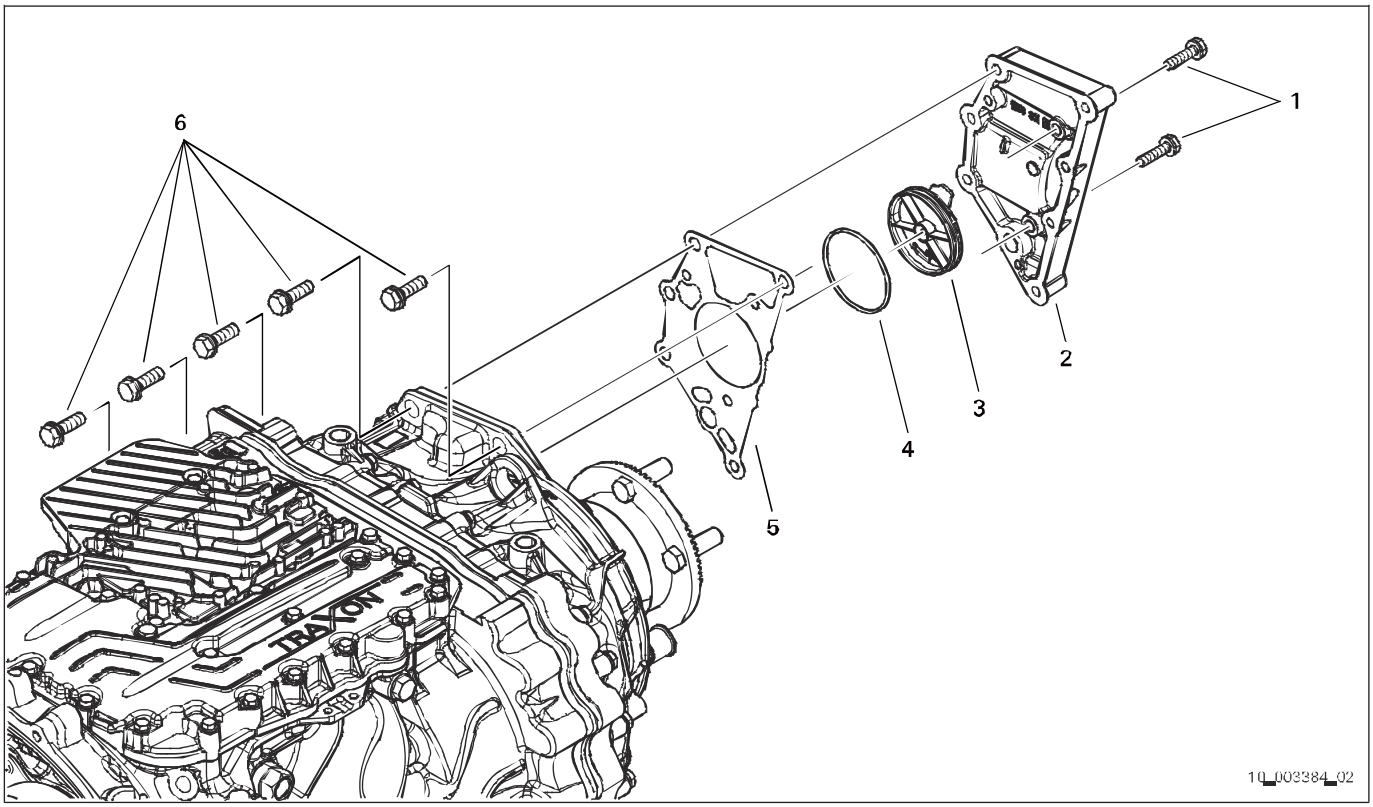

Fig. 83

1. Clean sealing faces.

2. Place new flat seal (5) *31.330* on the transmission housing.

3. Apply a thin layer of 0671.190.009 [RENOLIT CX-FO 20], 0671.190.148 [RENOLIT 283 EP2] or 0671.190.107 [RENOLIT CX-EP2] to the new O-ring (4) *31.320*.

4. Fit the O-ring (4) *31.320* in the plug (3) *31.318*.

5. Apply a thin layer of 0671.190.009 [RENOLIT CX-FO 20], 0671.190.148 [RENOLIT 283 EP2] or 0671.190.107 [RENOLIT CX-EP2] to the inside of the bore for the plug (1) *31.318*.

6. Insert the plug (1) *31.318* into the bore.

7. Align the arrow on the plug (1) *31.318* with the arrow on the transmission housing.

   → The arrows should be pointing towards each other.

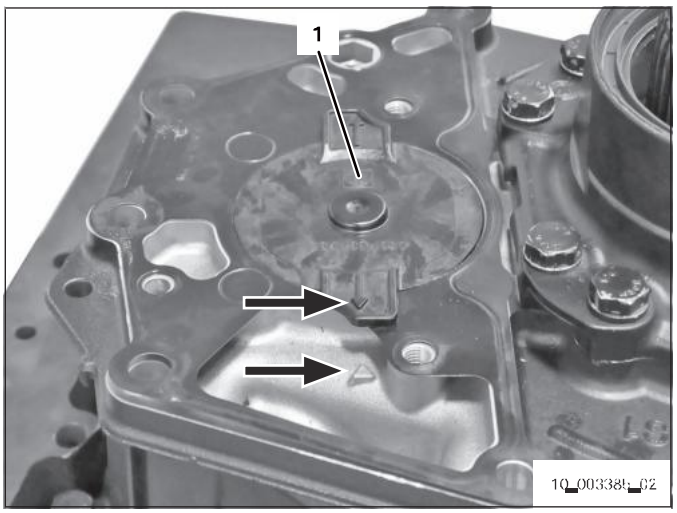

Fig. 84

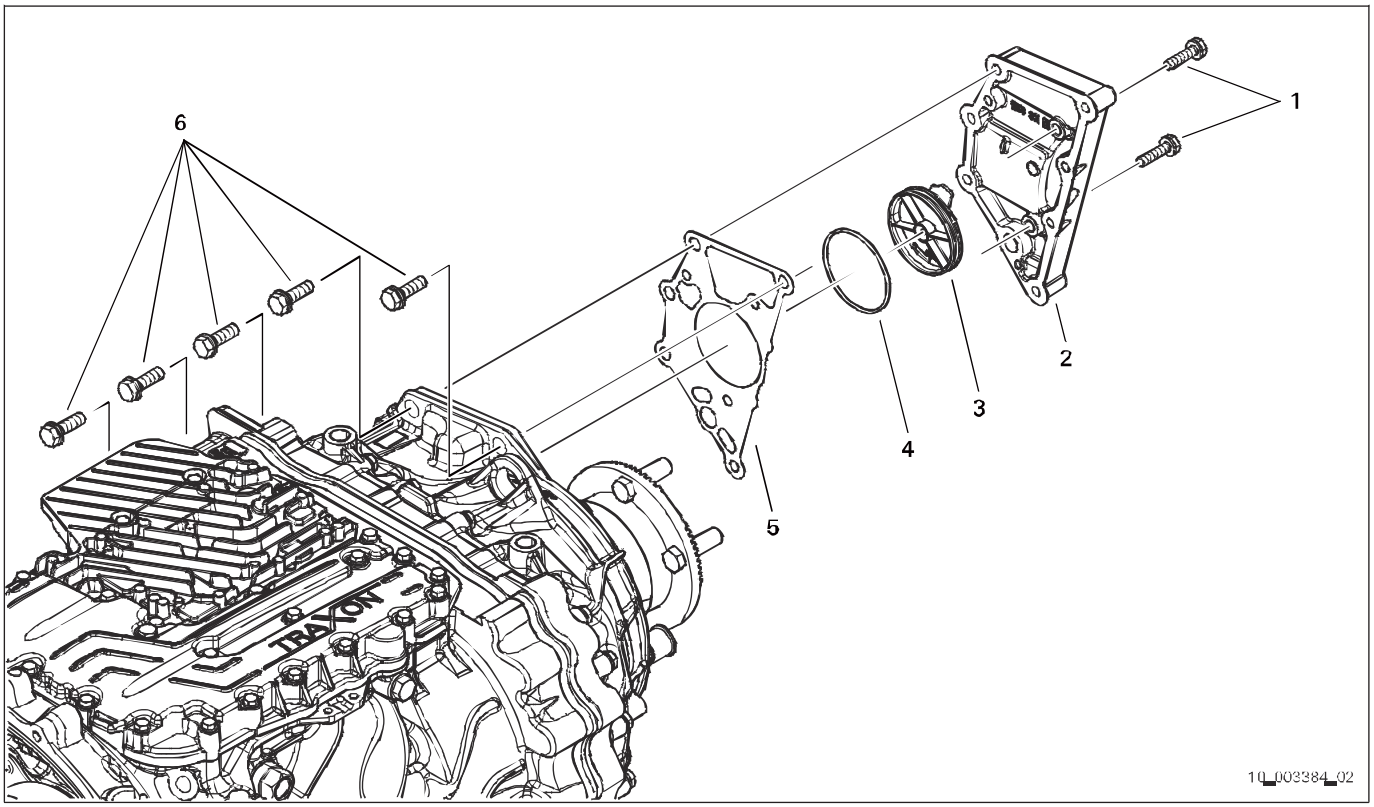

Fig. 85

8. Set down the cover (2) *31.310*.

9. Turn in two M10x40 hexagon screws (1) *31.400, 31.410* by hand.

10. Screw in five M12x45 screws with washer assembly (6) *31.350–31.390* and tighten.
Tightening torque: **79 Nm**

11. Tighten two M10x40 hexagon screws (1) *31.400, 31.410*.
Tightening torque: **46 Nm**

12.12 Replacing the compressed air connecting nozzle

12.12.1 Removing the compressed air connecting nozzle

Requirements:
- Engine is off.
- Air line to connecting nozzle is removed in accordance with the specifications of the vehicle manufacturer.

1. Loosen and remove the connecting nozzle (1) *59.010*.

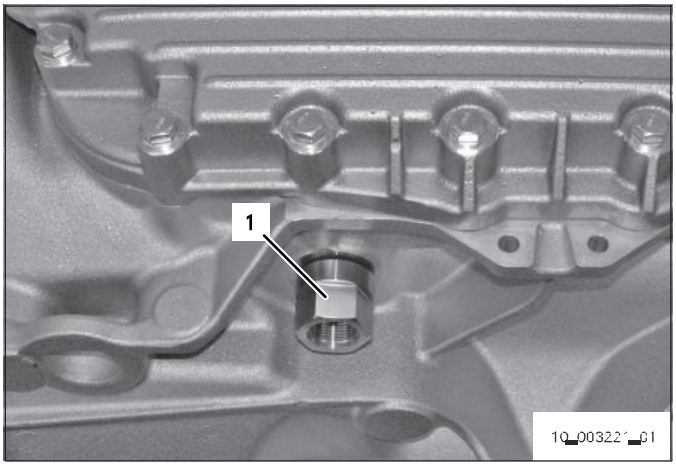

Fig. 86

2. Press the screen insert (4) *59.020* out of the connecting nozzle (1) *59.010* in the direction of the arrow.

3. Remove the two O-rings (2, 3) *59.030, 59.040* from the connecting nozzle (1) *59.010*.

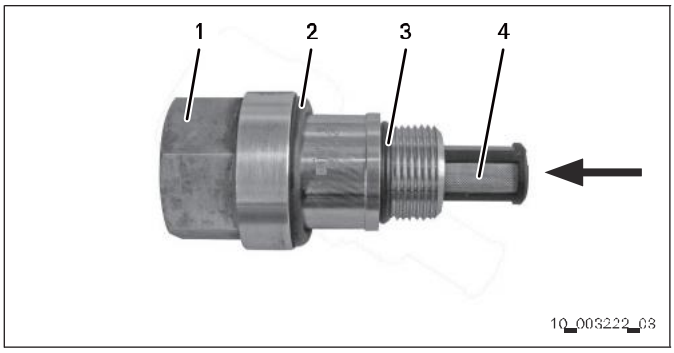

Fig. 87

12.12.2 Installing the compressed air connecting nozzle

Operating supplies and auxiliary materials:

- 0671.190.009 RENOLIT CX-FO 20
- 0671.190.148 RENOLIT 283 EP2
- 0671.190.107 RENOLIT CX-EP2

1. Insert the screen insert (4) *59.020* into the connecting nozzle (1) *59.010* in the direction of the arrow.

2. Apply a thin layer of 0671.190.009 [RENOLIT CX-FO 20], 0671.190.148 [RENOLIT 283 EP2] or 0671.190.107 [RENOLIT CX-EP2] to the two new O-rings (2, 3) *59.030, 59.040*.

3. Insert two O-rings (2, 3) *59.030, 59.040* into connecting nozzle (1) *59.010*.

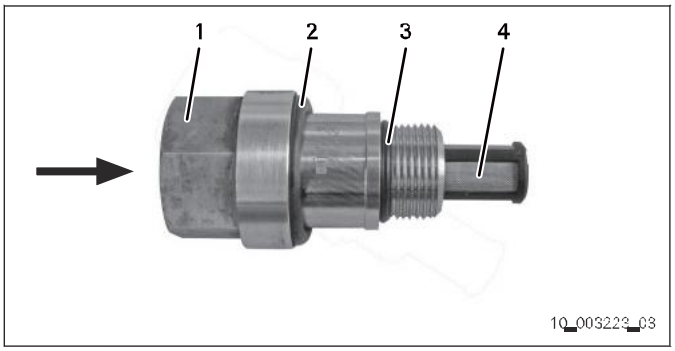

Fig. 88

4. Bolt in and tighten the connecting nozzle (1) *59.010*.
   Tightening torque: **50 Nm**

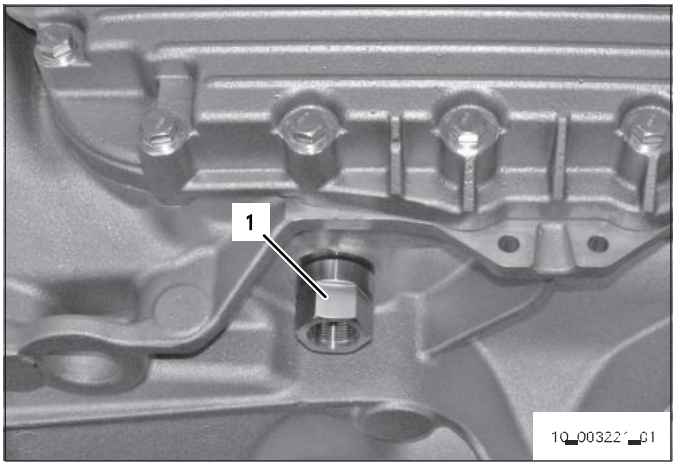

Fig. 89

12.13 Replacing the ConAct

12.13.1 Removing the ConAct

Requirements:

- The ConAct has been bled *(refer to Section Bleeding the ConAct)*.
- The transmission is removed according to the vehicle manufacturer's or body manufacturer's specifications.
- Plug connection has been cleaned.

NOTICE

Property damage due to electrostatic discharge (ESD) possible.

⇨ Observe ESD protection.
⇨ Do not touch contacts.
⇨ Wear conductive workwear.
⇨ Use ESD transport protection.
⇨ Use ESD protective packaging.

1. Remove the sensor cable (5) from the cable clamps (6).

2. Loosen the two M6x40 hexagon screws (1) *68.032, 68.034* on the plug (2) from the sensor and remove them.

3. Remove the plug (2) from the sensor.

4. Loosen and remove four M8x25 torx screws (3) *68.100, 68.110, 68,120, 68.130.*

5. Lift off the ConAct (4) *68.010.*

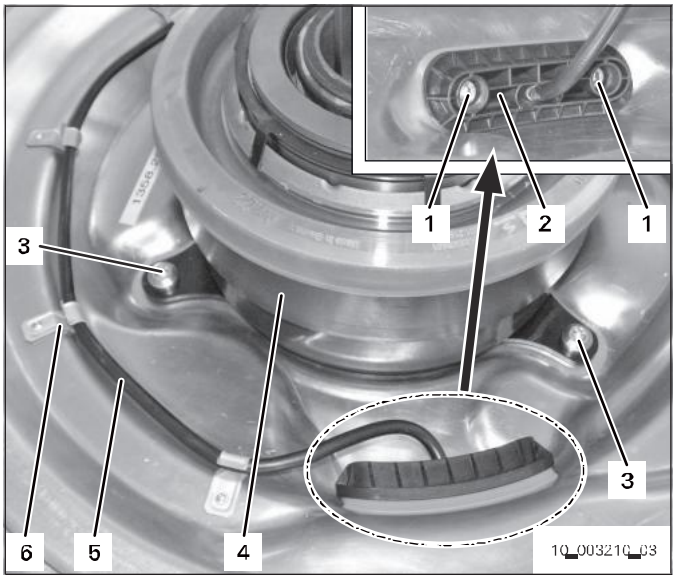

Fig. 90

6. Remove the sealing ring (1) *68.020* from the housing cover *68.060.*

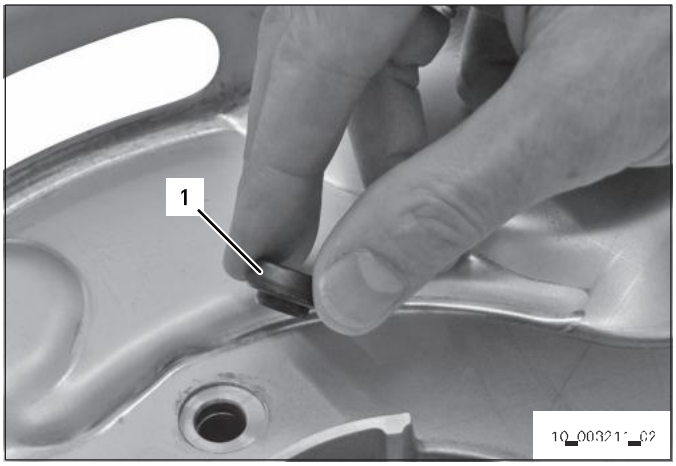

Fig. 91

7. Lift off the housing cover (1) *68.060.*

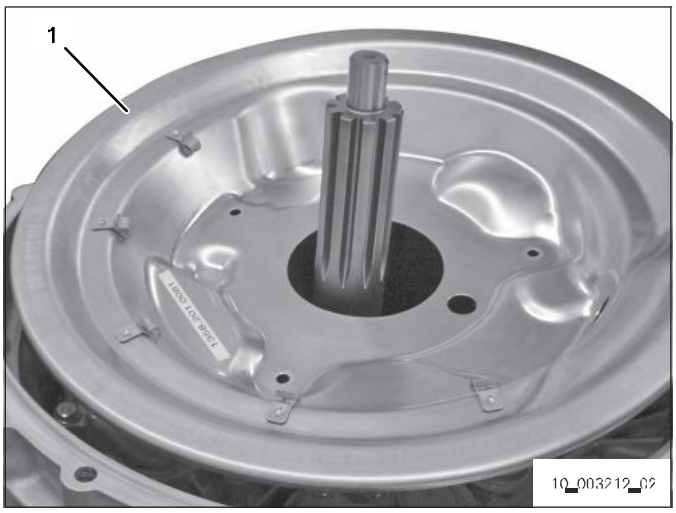

Fig. 92

8. If the sensor is faulty, replace the entire ConAct.

Do not unscrew the four screws (1) from the sensor.

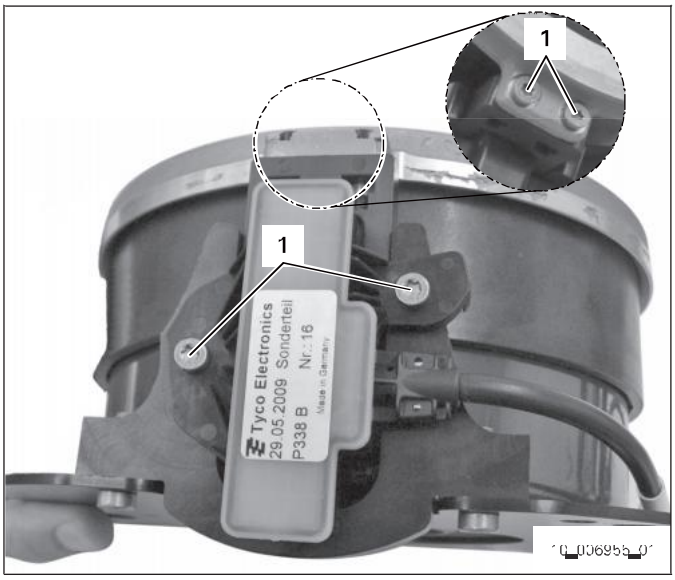

Fig. 93

12.13.2 Installing the ConAct

NOTICE

Property damage due to electrostatic discharge (ESD) possible.

⇨ Observe ESD protection.
⇨ Do not touch contacts.
⇨ Wear conductive workwear.
⇨ Use ESD transport protection.
⇨ Use ESD protective packaging.

1. Place the housing cover (1) *68.060* in the clutch housing, in the correct position.

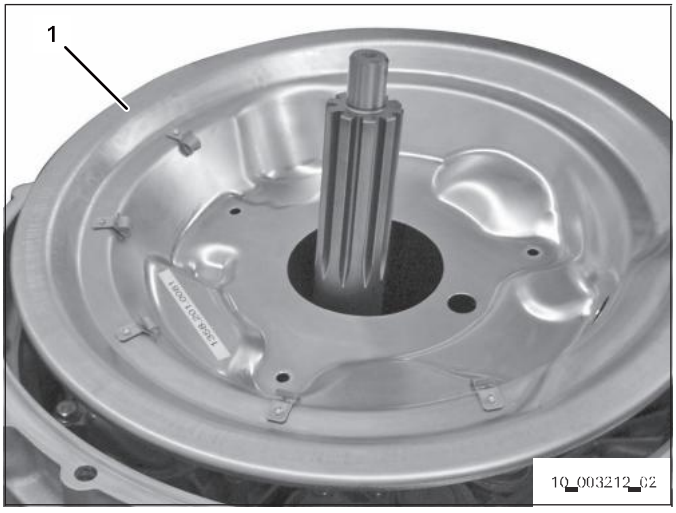

Fig. 94

2. Insert the sealing ring (1) *68.020* into the housing cover *68.060*.

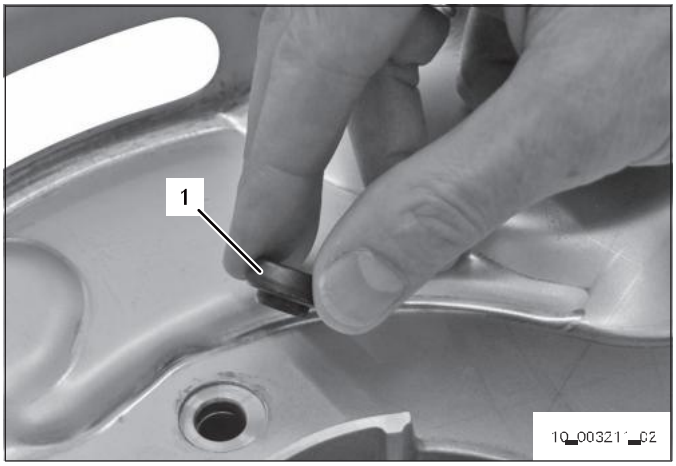

Fig. 95

3. Screw in the guide pins (2).

4. Carefully set the ConAct (1) *68.010* on the housing cover *68.060*, placing it over the input shaft and guide pins (2).

5. Remove the guide pins (2).

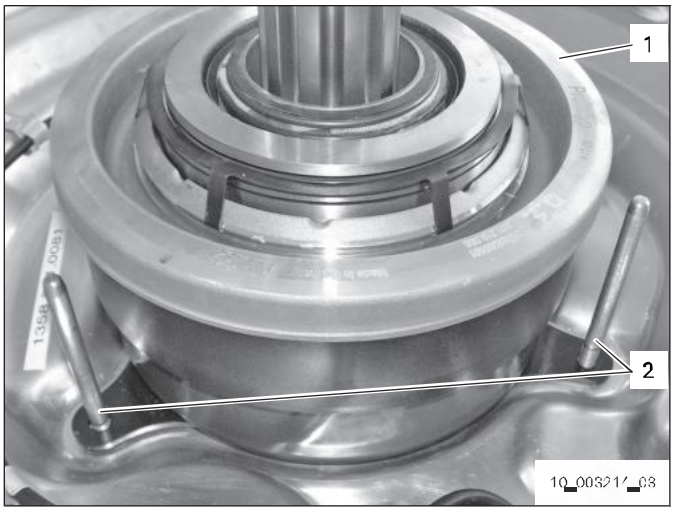

Fig. 96

6. Bolt the ConAct (4) *68.010* using four M8x25 torx screws (3) *68.100, 68.110, 68.120, 68.130*.
Tightening torque: **23 Nm**

7. Insert the plug (2) of the sensor.

8. Screw the two M6x40 hexagon screws (1) *68.032, 68.034* into the plug (2) of the sensor and tighten them.
Tightening torque: **9.5 Nm**

9. Insert the cable (5) of the sensor into the cable clamps (6).

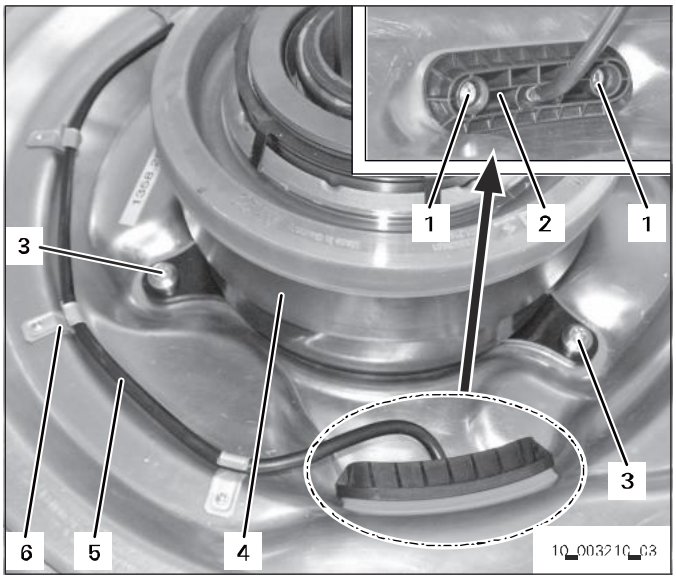

Fig. 97

10. The ConAct can only be pressed back if it has been bled or the valve block has been removed.

    Press the ConAct (3) *68.010* back and secure it with a retaining clamp (1) *68.070*.

11. Install the transmission in accordance with the vehicle manufacturer's or body manufacturer's specifications.

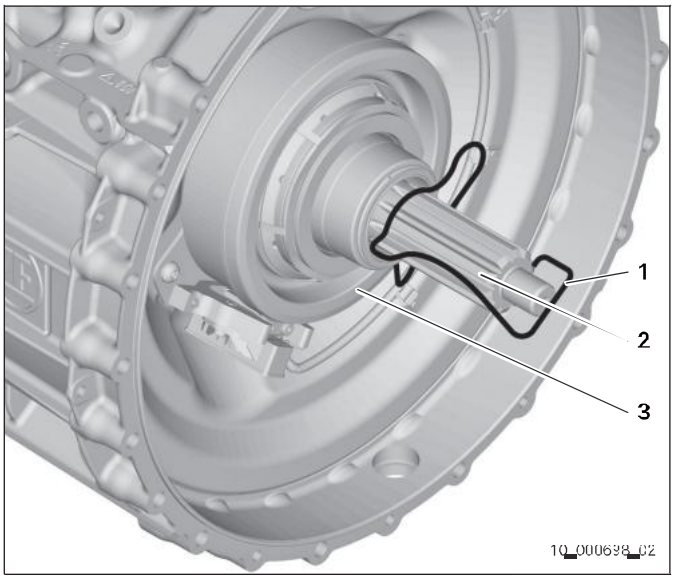

Fig. 98

12.14 Replacing the output flange

12.14.1 Removing the output flange – version without INTARDER

Requirements:

- Engine is off.
- The propshaft is removed from the output flange in accordance with the vehicle manufacturer's specifications.

1. Loosen the two M12x60 hexagon screws (4) *35.030, 35.040* and remove them together with the washer (3) *35.020*.

2. Use a thrust piece to protect the planet carrier.

   Pull off the output flange (1) *35.321* using the standard three-armed puller and remove the O-ring (2) *35.010*.

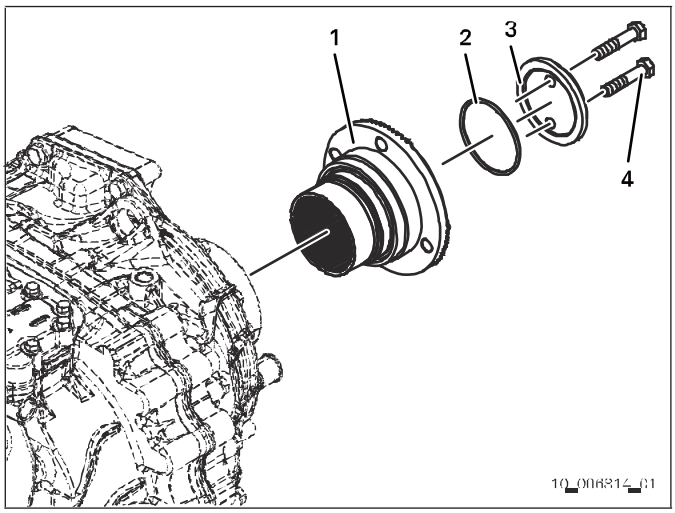

Fig. 99

12.14.2 Installing the output flange – version without INTARDER

1. **⚠ CAUTION**

   Risk of burn injuries due to contact with hot or cold surface.
   Slight to moderate injury possible.
   ⇨ Wear protective gloves.

   Heat the output flange (1) *35.321* up to a maximum of 120°C.

2. Push the output flange (1) *35.321* onto the planet carrier's gearing until it reaches the axial limit stop and let it cool off.

3. Carefully insert the O-ring (2) *35.010* into the groove between the output flange (1) *35.321* and the planet carrier. Do not damage the O-ring (2) *35.010*.

4. Insert the washer (3) *35.020* into the output flange (1) *35.321*.

5. Secure the washer (3) *35.020* with two M12x60 hexagon screws (4) *35.030, 35.040*.
   Tightening torque: **120 Nm**

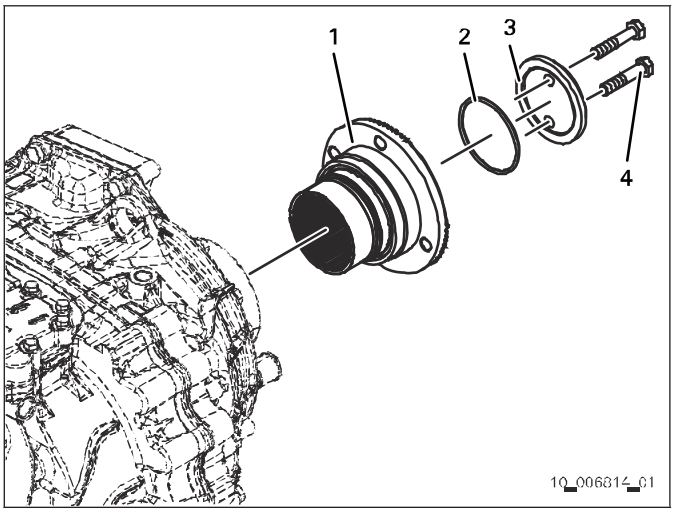

Fig. 100

12.14.3 Removing the output flange – version with INTARDER

Requirements:
- Engine is off.
- The propshaft is removed from the output flange in accordance with the vehicle manufacturer's specifications.

1. Loosen the two M12x60 hexagon screws (5) *35.030, 35.040* and remove them together with the washer (4) *35.020*.

2. Use a thrust piece to protect the planet carrier.

   Pull off the output flange (2) *35.321* using the standard three-armed puller and remove the O-ring (3) *35.010*.

3. Remove four M14x50 hexagon screws (1) *35.350–35.380*.

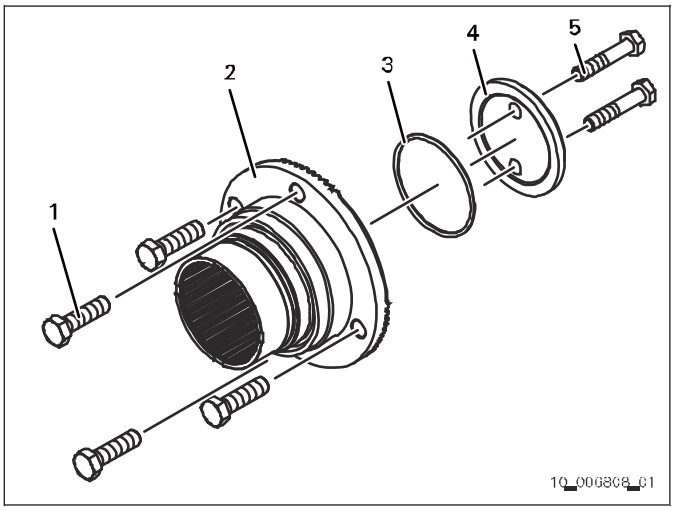

Fig. 101

12.14.4 Installing the output flange – version with INTARDER

1. Insert four M14x50 hexagon screws (1) *35.350–35.380* into the output flange (2) *35.321* and secure them with a protective cap if required.

2. **⚠ CAUTION**

   Risk of burn injuries due to contact with hot or cold surface.
   Slight to moderate injury possible.
   ⇨ Wear protective gloves.

   Heat the output flange (1) *35.321* up to a maximum of 120°C.

3. Push the output flange (2) *35.321* onto the planet carrier's gearing until it reaches the axial limit stop and let it cool off.

4. Carefully insert the O-ring (3) *35.010* into the groove between the output flange (2) *35.321* and the planet carrier. Do not damage the O-ring (3) *35.010*.

5. Insert the washer (4) *35.020* into the output flange (2) *35.321*.

6. Secure the washer (4) *35.020* with two M12x60 hexagon screws (5) *35.030, 35.040*.
   Tightening torque: **120 Nm**

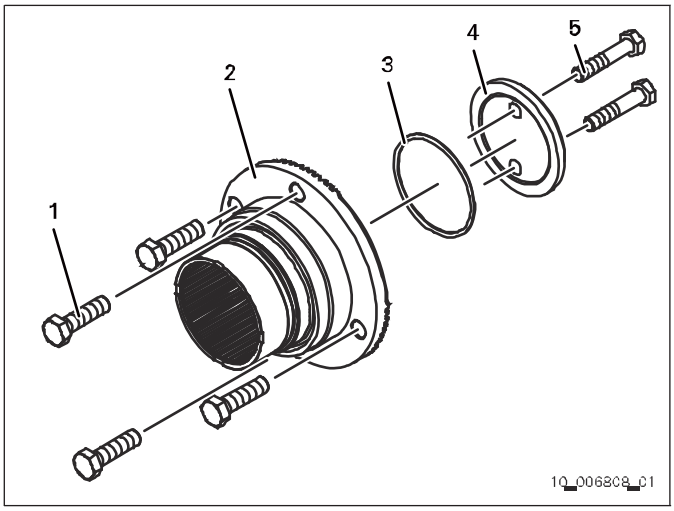

Fig. 102

13 Inspections, Records

The TRAXON checklist is available in ZF Testman or from the ZF-ServiceLine.

- When executing maintenance, fill out the complete TRAXON checklist.
- If the transmission has already been removed, fill out page 1 of the TRAXON checklist.
- If there is a complaint, complete back-up documentation *(refer to ZF-ServiceLine)* and then fill out the complete TRAXON checklist to identify the issue.

14 Initial Operation

- Initial operation of the ZF product
- Resuming operation of the ZF product after a prolonged downtime
- Resuming operation of the ZF product after repair

14.1 Before initial operation

Perform before initial startup of the vehicle:

- Check oil level *(refer to Section Checking oil level)*.

Perform the following before initially operation of the PTO:

- Manually check output flange with propshaft for clearance.
  Only check when engine is switched off.
  All warranty claims shall become void in the event of damage caused by noncompliance.

14.2 Calibrating the inclination sensor

Calibration process

- Pre-condition: Vehicle is placed on horizontal ground in leveled position (driving level set).
- Switch on ignition (terminal 15), do not start engine.
- Activate diagnosis service (0X021E, Calibrate Slope Sensor).
- Waiting time approx. 10 seconds
- Ignition off and wait for follow-up time, approx. 5 seconds.

14.3 Initial operation conditions

Observe the following requirements when taking PTOs into operation:

- No dry run may take place with an attached drive-dependent steering pump. An oil circuit must be ensured if the pump is connected.
- Also observe the following with automated transmissions:
  - Prior to initial operation, configure the electronics.
  - The vehicle manufacturer is responsible for ensuring the correct configuration.

All warranty claims shall become void in the event of damage caused by noncompliance.

15 Annex

15.1 List of abbreviations

CAN	Controller Area Network
ESD	electrostatic discharge
LAN	Local Area Network
PDF	Portable Document Format
USB	Universal Serial Bus

15.2 Overview of revisions

Index	Date of issue	Initiator
g	2021-03	TTQT2

Tab. 11 Edition

Chapter/Section	Added	Changed	Removed	Comment
(refer to Section Product designation, page 8)		X		Editorially revised.
(refer to Section Information about the documentation, page 9)		X		Editorially revised.
(refer to Section Weight, page 19)		X		Editorially revised.
(refer to Section Oil grade, page 19)		X		Contents revised.
(refer to Section Oil quantity, page 20)		X		Editorially revised.
(refer to Chapter Maintenance, page 29)		X		Contents revised.
(refer to Section Checking transmission oil level, page 30)		X		Image editorially revised.
(refer to Section Draining oil, page 32)		X		Image editorially revised.
(refer to Section Filling oil, page 35)		X		Image editorially revised.
(refer to Chapter Replacing components, page 48)		X		Contents revised.
(refer to Section Removing the sensor module, page 56)		X		Editorially revised.
(refer to Section Installing the sensor module, page 57)		X		Editorially revised.
(refer to Section Installing the ConAct, page 86)		X		Image editorially revised.

Tab. 12 Overview of revisions

ZF Friedrichshafen AG
88038 Friedrichshafen
Deutschland · Germany
Telefon/Phone +49 7541 77-0
Telefax/Fax +49 7541 77-908 000
www.zf.com

FN 13.8./01.101g ■ 2007-03

REPAIR INSTRUCTIONS

TRAXON

Stage 3

Complete Dismantling, Model Ranges 12.1, 12.2 and 16

TRUCKS, BUSES

Copyright © ZF Friedrichshafen AG

This document is protected by copyright. Complete or partial reproduction or dissemination of this document is prohibited without the consent of ZF Friedrichshafen AG. Infringements lead to civil and criminal prosecution.

This document is a translation of the German original.

Page

Preface ... 7
Validity and field of application ... 7
Product designation 8
Safety ... 10
Signal words and symbols ... 10
General safety instructions ... 11
Product-specific safety instructions ... 13
ESD protection ... 13
Instructions for Repair and Assembly ... 14
Consumables ... 17
Settings ... 18
Workshop Equipment ... 19
Special tools ... 19
Diagnosis Tool ... 30
Truck Transmission Overview ... 32
Bus Transmission Overview ... 33
Transmission Version ... 34
TRAXON basic transmission ... 34
TRAXON with INTARDER ... 34
Transmission Interfaces ... 35
Transmission Setup ... 36
Type Plate ... 37
TRAXON type plate ... 37
INTARDER type plate ... 38
Control unit type plate ... 38
Transport ... 39
Preparatory Work ... 40
Bleeding the ConAct ... 43
Bleeding the ConAct with the diagnostic unit ... 43
Manually bleeding the ConAct ... 44
Disassembling the Transmission ... 45
Removing the transmission control ... 46

Page

Removing the valve block 50
Removing the sensor module 51
Removing the selector actuator 52
Removing the speed sensor 53
Removing the impulse sensor 54
Removing the heat exchanger 55
Removing the PTO cover 57
Removing the adapter plate 58
Compressed-air connection (removing the connecting nozzle) 61
Removing the ConAct 62
Rotating the transmission without assembly stand 65
Removing the output flange 66
Removing the output cover 68
Removing the steering pump 70
Removing the INTARDER 72
Removing the transmission housing 75
- Removing the transmission housing (version with INTARDER) 76
- Removing the transmission housing (version without INTARDER) 77
Disassembling the planet carrier 80
Disassembling the sun gear 87
Removing the range change group 88
Rotating the transmission 94
Removing the connection plate 96
- Disassembling the R/C piston 104
- Disassembling the S/G piston 105
- Disassembling the MT piston 106
- Disassembling the plain bearing 107
Removing the clutch housing 108
Disassembling the clutch housing 111
Removing the shaft package 112
Disassembling the countershaft 116
Disassembling the input shaft 118
Disassembling the synchronizer unit 124

Page

Disassembling the main shaft, 12-speed, model range 12.1 126
Disassembling the main shaft, 12-speed, model range 12.2 130
Disassembling the main shaft, 16-speed 134
Disassembling the shift system 139
Disassembling the bearing support 144

Assembling the Transmission 146
Assembling the bearing support 146
Assembling the shift system 150
Assembling the main shaft, 12-speed, model range 12.1 156
Assembling the main shaft, 12-speed, model range 12.2 161
Assembling the main shaft, 16-speed 167
Assembling the synchronizer unit 174
Assembling the input shaft 178
Assembling the countershaft 185
Installing the shaft package 186
Assembling the clutch housing 191
Installing the clutch housing 192
Pre-assembling the connection plate 196
Measuring the connection plate 205
Connection plate 209
- Overview gear shift pistons 209
- Pre-assembling the R/C piston 211
- Pre-assembling the S/G piston 212
- Pre-assembling the MT piston 214
- Pre-assembling the plain bearing 217
- Fitting the connection plate 218

Installing the ConAct 225
Rotating the transmission by 180° 228
Installing the range change group 231
Assembling the sun gear 237
Pre-assembling the planetary gearset 238

Page

Assembling the planet carrier ... 239
Assembling the transmission housing ... 245
Measuring the range change group ... 247
- Clearance setting main shaft - sun gear ... 247
Fitting the transmission housing ... 249
- Fitting the transmission housing (version without INTARDER) ... 250
- Fitting the transmission housing (version with INTARDER) ... 251
Installing the INTARDER housing ... 252
Fitting the steering pump ... 254
Installing the adapter plate ... 256
Installingthe PTO Cover ... 259
Fitting the output cover ... 260
Installing the output flange ... 262
Installing the impulse sensor ... 264
Installing the speed sensor ... 265
Fitting the heat exchanger ... 266
Compressed-air connection (fitting the connecting nozzle) ... 269
Installing the selector actuator ... 270
Installing the sensor module ... 271
Installing the valve block ... 272
Installing the transmission control ... 273
Final assembly ... 279
Checking leak tightness ... 280

Annex ... 281
Overview of revisions ... 282
Comparison table for grease quantities ... 283
Installation instructions 0000.702.644 ... 285

Preface

In addition to the ZF documentation, observe the provisions of the vehicle manufacturer or the body manufacturer.

Validity and field of application

This documentation applies to the following ZF products:

- TRAXON truck
  - model range 12.1
  - model range 12.2
  - model range 16
- TRAXON bus

This documentation applies to the following field of application:

- Complete dismantling of the ZF product

Product Designation

The product designation for TRAXON Truck is composed of the following.

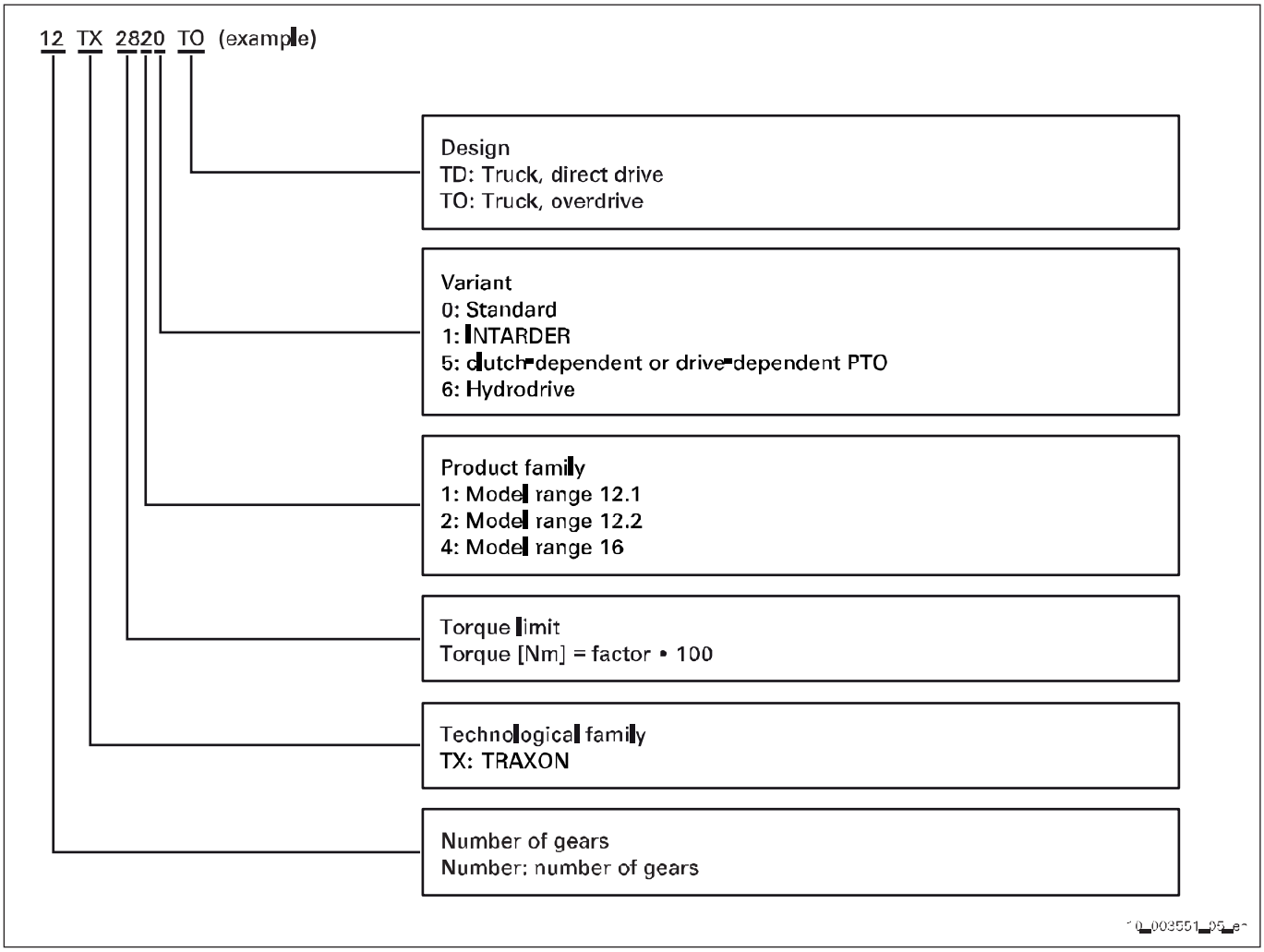

In the event of a variant combination, the lower digit is used.

The product designation for TRAXON Bus is composed of the following.

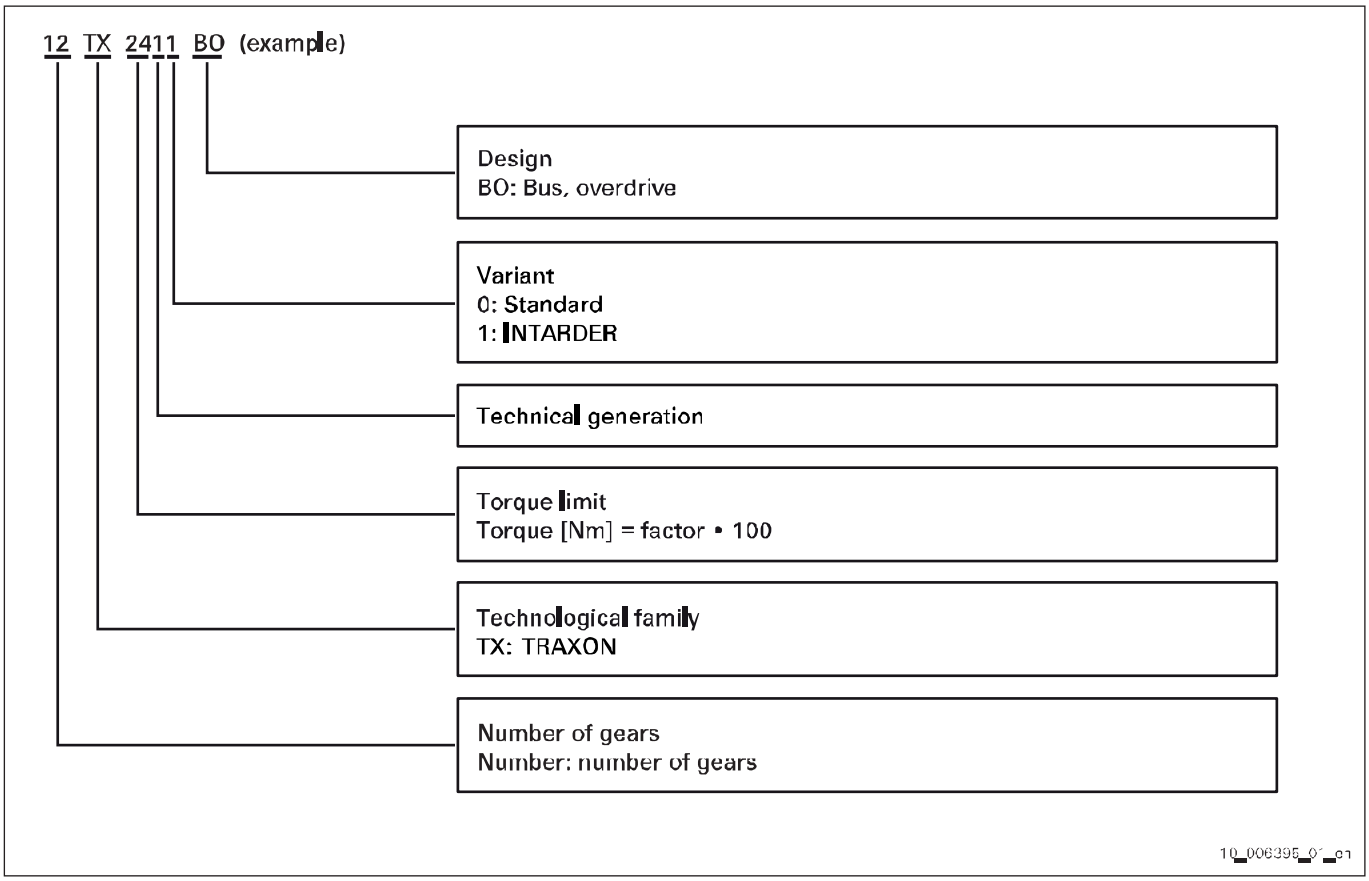

Safety

Signal words and symbols

This document contains particularly highlighted safety instructions which are marked with one of the following signal words depending on the severity of the danger.

⚠ DANGER

DANGER
The signal word DANGER indicates a dangerous situation that, if not prevented, will lead to a severe injury or death.
⇒ Information as to how the danger can be prevented.

⚠ WARNING

WARNING
The signal word WARNING indicates a dangerous situation that, if not prevented, can lead to a severe injury or death.
⇒ Information as to how the danger can be prevented.

⚠ CAUTION

CAUTION
The signal word CAUTION indicates a dangerous situation that, if not prevented, can lead to a slight or moderate injury.
⇒ Information as to how the danger can be prevented.

NOTICE

The signal word NOTICE indicates a situation that, if not prevented, can lead to property damage.
⇒ Information as to how the property damage can be prevented.

The following symbols are additionally used:

⚠ This symbol refers to additional, safety-relevant information.

This symbol indicates information concerning special workflows, methods, application of aids, etc.

General safety instructions

Read all safety instructions and information. Failure to comply with safety instructions and information may lead to property damage, serious injuries or death.

Intended use

The ZF product is exclusively intended for the application as defined in the contract and as agreed on at the time of delivery. Any other or extended form of use does not comply with this definition of intended use. The intended use includes compliance with this documentation and other applicable documents, in order to avoid malfunctions and damage in operation.

The ZF product is designed and produced in line with state-of-the-art technology. The ZF product in its delivery status is safe to operate. However, the ZF product may pose dangers if improperly used by unauthorized, untrained and uninstructed staff or if not used according to its intended use.

Figures might deviate from the ZF product and are not drawn to scale. No conclusions can be drawn with regard to size and weight.

Assembly, commissioning, maintenance and repair

Perform assembly, commissioning, maintenance and repair work exclusively according to this documentation and other applicable documents.

Observe the following points:

- Employ authorized, trained and instructed staff.
- Observe technical provisions.
- Only use genuine ZF spare parts.
- Only use genuine ZF accessories.
- Only use genuine ZF special tools.
- Unauthorized changes and modifications lead to the expiry of the operator's license, warranty or guarantee.

In case of damage, contact ZF and have the following information on the product ready:

- Type
- Parts list [BoM] number
- Serial number
- Kilometer reading
- Description of damage

Observe safety instructions, valid safety regulations and legal conditions to prevent malfunctions and damage.

The country-specific safety regulations, accident prevention regulations and environmental protection provisions also apply.

Wear safety-relevant workwear for all work. Depending on the work, also wear personal protective equipment.

After completing the work, check correct function and functional security.

Handling the ZF product
Unauthorized changes and modifications might impair functional security. Changes, modifications and applications are only permissible upon written approval by ZF Friedrichshafen AG.

Observe the following when working on the ZF product:

- Secure workspace.
- Only carry out work at the unit when in a voltage-free state.
- Protect unit against being started accidentally. Attach instruction plate where it is clearly visible.
- Perform work when engine is switched off.
- Protect engine against being started accidentally. Attach instruction plate where it is clearly visible.
- Do not stand beneath a suspended load.
- Do not work on a suspended load.
- Only use permitted means of transport and lifting devices with sufficient load-bearing capacity.
- Close open pipelines and hoses and avoid damage.
- Observe tightening torques.
- Protect cables against mechanical damage.

Noise
Noise might cause irreversible damage to hearing.

The perception of acoustic signals, warning calls or sounds warning of impending danger is impaired by noise.

Observe the following when working on the ZF product:

- Avoid noise.
- Wear ear protection.

Operating supplies and auxiliary materials
Operating supplies and auxiliary materials might cause permanent damage to health and environmental damage.

Observe the following when selecting operating supplies and auxiliary materials:

- Health risks
- Environmental compatibility
- Material safety data sheets

Observe the following when handling operating supplies and auxiliary materials:

- Store operating supplies and auxiliary materials in suitable and correctly labeled containers.
- Seek medical help in case of injuries due to hot, cold or caustic operating supplies or auxiliary materials.

Observe the following to protect the environment:

- Collect leaking operating supplies and auxiliary materials in sufficiently large containers.
- Observe disposal regulations.
- Observe material safety data sheets.

Product-specific safety instructions

ESD protection

Electrostatic discharge (ESD) might cause damage to electronic components due to overvoltage.

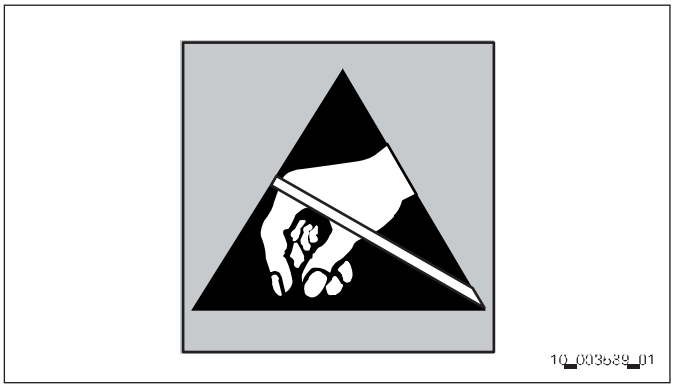

Electrostatic discharge sensitive devices are marked with this symbol.

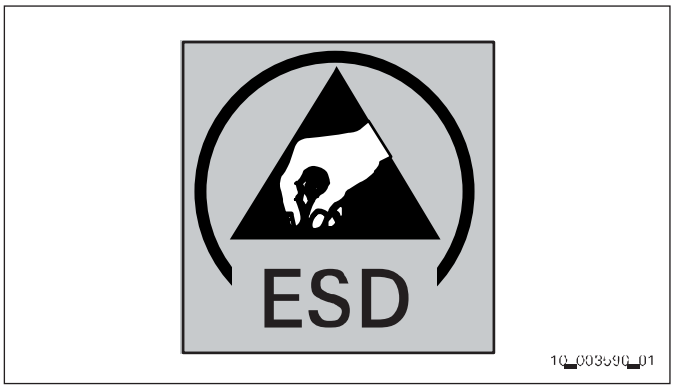

Products protecting against ESD, e.g., electrically conductive safety footwear, protective coverings, clothing, mats, trolleys, etc., are marked with this symbol.

Comply with ESD protection:

- Do not touch contacts.
- Wear conductive workwear.
- Ground workplace.
- Use ESD transport protection.
- Use ESD protective packaging.
- Use ESD transport protection and ESD protective packaging when transporting electronic components.

Further information:

- DIN EN 61340-5-1/2/3
- VDE 0300
- IEC/TR 61340
- ANSI/ESD standards

Notes on Repair and Assembly

General notes

- Please read this documentation prior to starting repair or assembly work.
- Prior to starting repair or assembly work, please find out whether ZF Service Information on the ZF product is available. ZF Service Information may contain tests or supplements to the product or to repair processes, which may not be included in this documentation. ZF Service Information is available from all ZF Aftermarket Partners or from the ZF ServiceLine.
- In cases of doubt, contact the relevant expert departments of ZF Aftermarket.
- Please ensure that all work on the ZF product is performed expertly and under clean conditions.
- Use the specified special tools and equipment intended for the working procedures described.
- Please perform all work according to the working procedure described.
- Cover opened ZF products to prevent entry of foreign matter.
- Cover parts that have been removed and that are reusable and protect them against dirt and damage.
- After completion of work and inspections, specialized staff must ensure that the ZF product is again functioning perfectly and is safe to operate.

Cleaning the ZF product

Clean the ZF product with an appropriate cleaning agent prior to repair or assembly works.

NOTICE

Possible damage to ZF product due to water infiltration.
⇒ Be careful when using a pressure washer on the ZF product.

Dismantling the ZF product

- To avoid mix-ups, the parts must be clearly assigned to the disassembled ZF product. In particular, this applies to gear parts, reusable spacer washers or shims, electronic components, etc.
- Assemblies which must not be disassembled or are only available as spare parts assemblies are described accordingly. Please refer to the spare parts catalog for the ZF product.
- Inspect the parts during disassembly in order to find a potential cause of damage.

Assembling the ZF product

Assemble the ZF product at a clean workplace. The order of work steps, settings and tightening torques must be observed. Use the special tools specified in the work steps.

Bearings

The provisions for assembly of the bearings are described in the respective work step. Each bearing integrated must be lubricated with operating oil after assembly.

Sealing compound

Only use sealing compound when described in the work step *(refer to Section Operating supplies and auxiliary materials)*. Please observe the manufacturer guidelines and processing instructions. Apply the sealing compound thinly and evenly. Keep oil ducts and oil bores free of sealing compound. When assembling the parts, no sealing compound must enter the oil ducts or oil bores.

Retaining agents

Only use retaining agents when described in the work step *(refer to Section Operating supplies and auxiliary materials)*. Please observe the manufacturer guidelines and processing instructions.

Oil

Fill the ZF product with oil before commissioning. For the procedure and approved oil grades, refer to the document valid for the ZF product, the type plate and/or the latest List of Lubricants TE-ML. These documents are available at all ZF Aftermarket Partners and under www.zf.com.

Cleaning parts

- Clean all reusable parts.
- Remove sealing compound residues on sealing faces or retaining agent residues, e.g., in tapped holes or on splines.
- Clean joining surfaces.
- Clean blind holes and blind hole threads.
- Lubricating bores, oil bores, oil ducts, bores for oil press fits and lubricating grooves must be free from dirt, preservatives and foreign matter. Check for free passage.
- Hose assemblies, tubes and joining elements must be free from dirt, oil and damage. Clean dirty or oily parts. Check for free passage. Replace damaged parts.
- Clean all cavities and reliefs.
- Remove preservatives from new parts.
- Metal bead seals may not come into direct contact with cold cleaners. After cleaning metallic contact surfaces, the cold cleaner must be volatilized before the metal bead seal is applied.

Reusing parts

Expert staff assess whether parts can be reused. Replace parts

- if they are damaged.
- if they are worn, e.g. bearings, multidisks, thrust washers.
- if they have a permanent deformation.
- if they have been overheated during operation or during disassembly.

Only replace with original ZF parts or ZF approved parts. Please refer to the spare parts catalog for the ZF product.

Replacing parts

The following parts must always be replaced:

- Bolts with reduced shank and seals
- Single-use parts
- Sealing rings
- Safety plates
- Shaft sealing rings

Only replace with original ZF parts or ZF approved parts. Please refer to the spare parts catalog for the ZF product.

Reworking parts

Expert staff assess whether parts need to be reworked.

Minor damage on reusable components can be removed and reworked with suitable special tools if the component's function is not impaired.

Minor damage includes:

- Indentation marks on sealing faces
- Score marks or burrs caused by the disassembly of the ZF product
- Fretting corrosion
- Paint and corrosion damage

If rework is needed on spacer washers or shims because of clearance settings, ensure that the reworked surface is level with the original face and has the same surface quality.

Debur all edges that can cause chip formation during the assembly process or represent a risk of injury for the fitter. Remove burrs or other similar instances of unevenness.

Designation Material number	Name	Approx. quantity	Application	Comment
Grease 0750.199.019	for example RENOLIT CX-EP2	-	Sealing lip of shaft sealing rings and O-rings	Class A ZFN 13000
Transmission oil	refer to ZF List of Lubricants TE-ML 02	-	Transmission oil fill	-
Lubricating grease	RENOLIT CX-TOM 15-OEM		refer to Installation Instructions 0000.702.644 in the Annex	400 g cartridge **AA02.011.435**
Anti-corrosion oil 0750.199.008	for example MZK 150	0.50 cm^3	Pump shaft **08.020** Rotor **08.010**	Class S9 ZFN 13000

NOTE: Inquire size of containers before placing any orders!

Designation	Dimensions	Measuring instrument	Comment
Preload of countershafts	0.05 to 0.15 mm	Digital depth gage	Moving tapered roller bearing to zero position (zero clearance) and measure. Adjusting preload with shims **03.012** and **03.032**.
Axial clearance main shaft / sun gear	1.90 to 2.10 mm	Digital depth gage	Adjusting clearance with shim **32.820**.
Axial clearance input shaft	0 to 0.10 mm	Digital depth gage	Adjusting clearance with shim **02.040**.
Axial clearance securing ring on input shaft	0 to 0.10 mm	Feeler gage	Adjusting clearance with securing ring **02.050**.
Axial clearance of helical gear, constant 2 **02.180**	0 to 0.10 mm	Feeler gage	Adjusting axial clearance with snap ring **02.170**.
Axial clearance of helical gears on the main shaft	0.15 to 0.25 mm	Feeler gage	Adjusting clearance with variable washers **(9)**

Workshop Equipment

Special tools

The required quantity is listed. Please inquire as to packaging unit before ordering.

Figure	Order no. Designation Chapter	Qty.	Comments
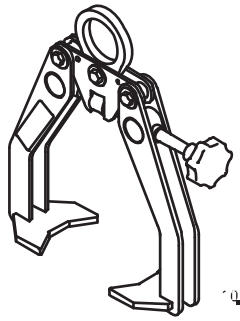	**1T66.153.417** **Load-lifting equipment** ■ Removing the transmission housing	1	Optional Alternatively: Tool 1X56.136.260 Lifting deviceforc range change group.
	**1T66.159.408** **Eyelet bolt (M10)** ■ Removing the clutch housing Placing the clutch housing on the bearing support	2	
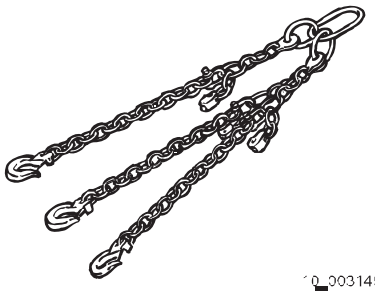	**1T66.160.432** **Chain sling** ■ Preparatory work Removing the clutch housing ■ Placing the clutch housing on the bearing support ■ Removing the shaft package ■ Installing the shaft package	1	Commercially available Alternatively: Tool 1X56.137.795 Chain sling for lifting the transmission.
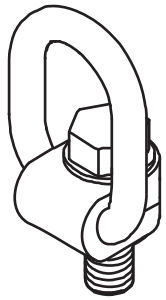	**1T66.160.650 (M16x1.5)** **Adapter (M16x1.5)** ■ Rotating the transmission without transmission assembly stand ■ Rotating the transmission	2	Commercially available Only screws inspected for cracks with quality 10.9 and higher may be used.
	1T66.161.764 (M16) **Adapter (M16)** optional ■ Fitting to assembly bracket 1X56.138.729.	2	

Figure	Order no. Designation Chapter	Qty.	Comments
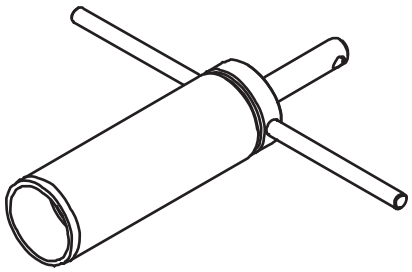	**1X56.045.808** **Mounting fixture** ■ Placing the clutch housing on the bearing support	1	Input shaft in conjunction with tool 1X56.138.216. Alternatively: Tool 1X56.122.304
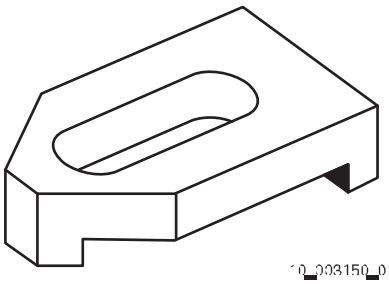	**1X56.104.910** **Clamping bar** ■ Assembling the transmission housing	2	Commercially available Clamping bars to fix bearing.
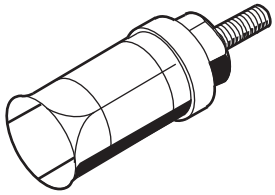	**1X56.122.211** **Extracting device** ■ Disassembling the bearing support	1	Disassembly of tapered roller bearing outer ring: 70–100 mm In conjunction with counter support 1X56.122.228.
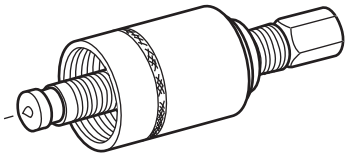	**1X56.122.304** **Assembly aid** ■ Removing the clutch housing ■ Disassembling the countershaft	1	Assembly aid suitable for tools 1X56.198.240 1X56.136.757 1X56.138.195
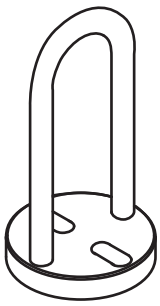	**1X56.136.260** **Adapter** ■ Removing the transmission housing ■ Fitting the transmission housing	1	Lifting device for planet carrier.

Figure	Order no. Designation Chapter	Qty.	Comments
	**1X56.136.757** **Extracting device** ■ Disassembling the countershaft	1	Only for output-end tapered roller bearings of model range 16. Extracting tapered roller bearing in conjunction with tool no. 1X56.122.304.
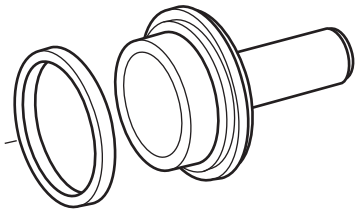	**1X56.137.124** **Adapter** Complete with washer and compensating ring. ■ Assembling the bearing support	1	Pressing in cylindrical roller bearing at bearing support.
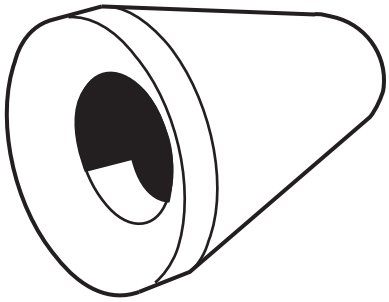	**1X56.138.064** **Protective sleeve** ■ Connection plate	1	Placing protective sleeve on input shaft.
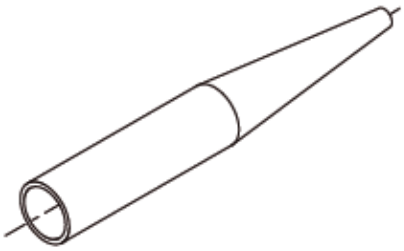	**1X56.138.081** **Assembly sleeve** ■ Assembling the synchronizer unit	3	Assembly sleeve for input shaft synchronization.
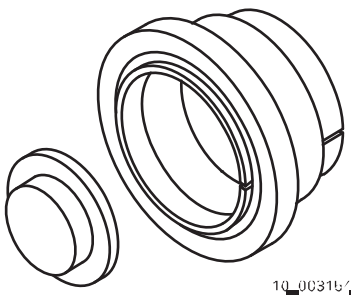	**1X56.138.087** **Extractor** ■ Disassembling the planet carrier	1	Extracting bearing inner ring from planet carrier.

Figure	Order no. Designation Chapter	Qty.	Comments
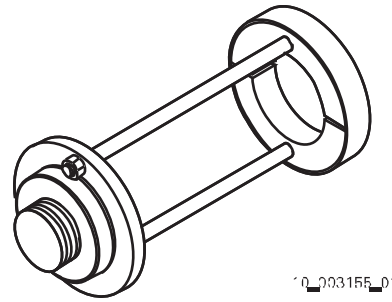	**1X56.138.195** **Extracting device** ■ Removing the clutch housing	1	Extracting ball bearing from the input shaft (in conjunction with tool no. 1X56.122.304)
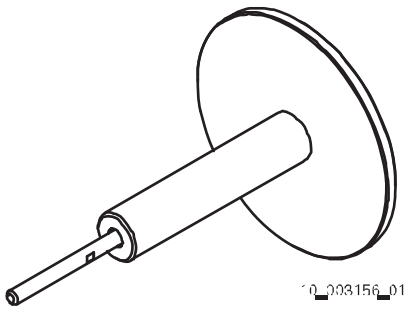	**1X56.138.196** **Assembly aid** ■ Assembling the main shaft, 12-speed ■ Assembling the main shaft, 16-speed	1	Assembly aid for assembly of the main shaft.
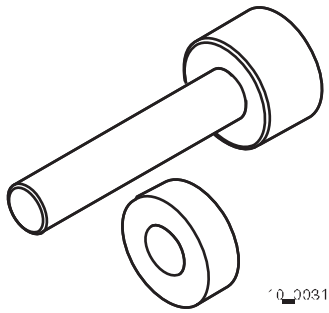	**1X56.138.205** **Assembly aid** ■ Assembling the main shaft, 12-speed ■ Assembling the main shaft, 16-speed	1	Installing tube on the main shaft.
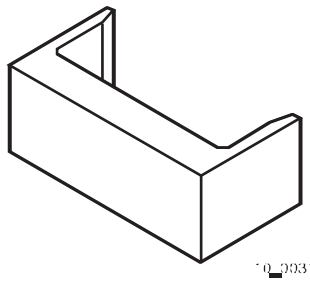	**1X56.138.207** **Bracket** ■ Installing the range change group	6	Bracket to assemble R/C synchronizer unit
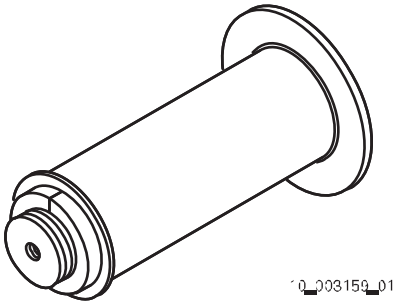	**1X56.138.216** **Mounting fixture** ■ Removing the shaft package ■ Installing the shaft package ■ Disassembling the input shaft ■ Assembling the input shaft ■ Installing the clutch housing	1	Lifting and mounting fixture for assembly and disassembly of the input shaft.

Figure	Order no. Designation Chapter	Qty.	Comments
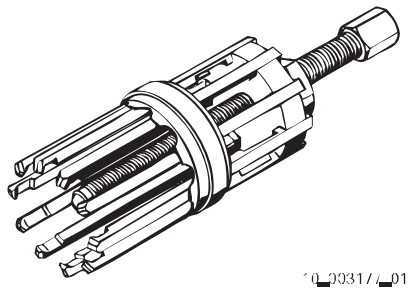	**1X56.138.295** **Extracting device** ■ Disassembling the transmission housing	1	Extracting device for ball bearing with eleven balls. Extracting ball bearing from planet carrier. **Attention: Extracting device is not suitable for impact wrench use.**
	**1X56.138.728** **Pliers** ■ Pre-assembling the R/C piston ■ Pre-assembling the S/G piston ■ Pre-assembling the MT piston ■ Removing the shaft package ■ Installing the shaft package	1	
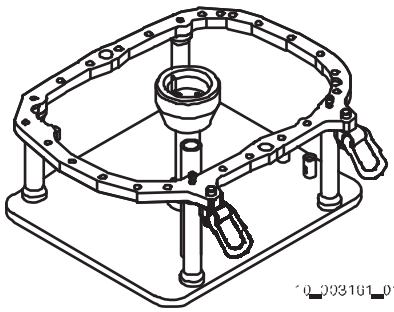	**1X56.138.729** **Assembly fixture** ■ Rotating the transmission ■ Rotating the transmission by 180° ■ Installing the shaft package ■ Disassembling the bearing support ■ Assembling the bearing support	1	Measuring countershaft, main shaft and sun Tool contains: - Spacer R/C rail - Spacer for oil tubes - Centering base for main shaft
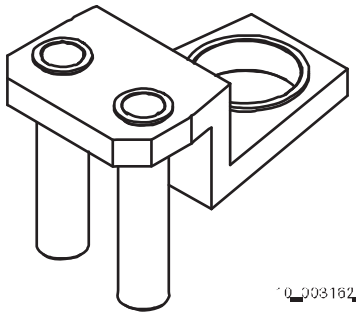	**1X56.138.730** **Assembly fixture** ■ Removing the shaft package ■ Installing the shaft package ■ Disassembling the input shaft ■ Assembling the input shaft	1	Assembly fixture to fix input shaft and gearshift rails.
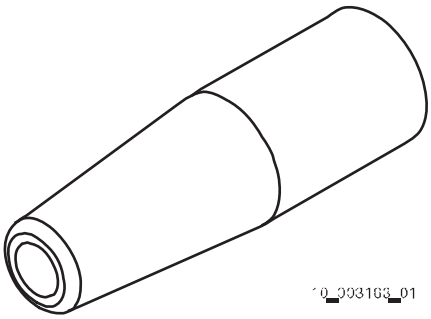	**1X56.138.731** **Mounting bush** ■ Pre-assembling the plain bearing (cylinder bottom) ■ Completing the splitter group (S/G) shift fork ■ 12-speed version: Completing the main transmission gearshift rail ■ 16-speed version: Completing the main transmission gearshift rail	2	Insertion aid for sensor ring. Protection for shaft sealing ring.

Figure	Order no. Designation Chapter	Qty.	Comments
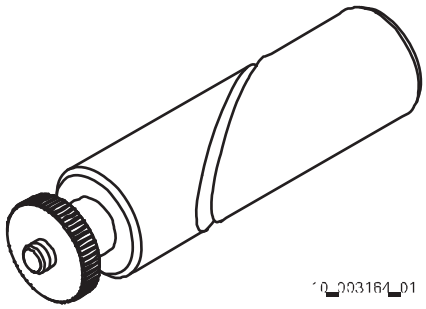	**1X56.138.732** **Fixing bolt** ■ Removing the range change group ■ Installing the range change group ■ Removing the shaft package ■ Installing the shaft package	2	Fixing the R gear reversing gears.
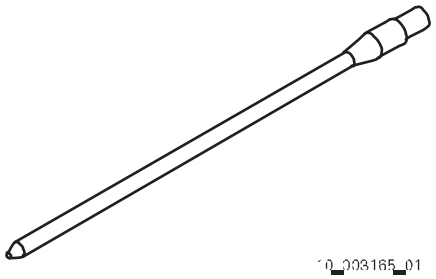	**1X56.138.733** **Centering pin** ■ Placing the clutch housing on the bearing support	1	Centering injector tube Ø 10.
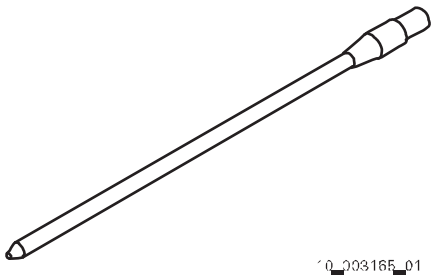	**1X56.138.734** **Centering pin** ■ Placing the clutch housing on the bearing support	1	Centering injector tube Ø 16.
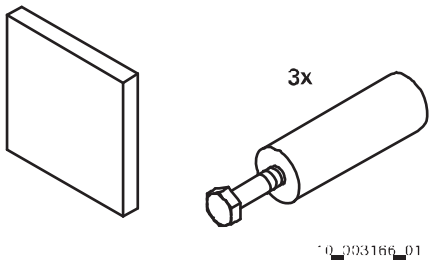	**1X56.138.735** **Bracket** ■ Pre-assembling the connection plate	1	Included in the kit: Three supports and a plate. Support for the pre-assembly of the connection plate.
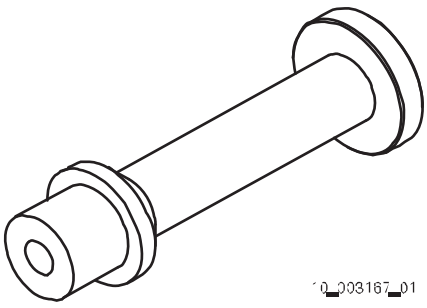	**1X56.138.736** **Press-in mandrel** ■ Disassembling the plain bearing (cylinder bottom) ■ Pre-assembling the connection plate ■ Pre-assembling the plain bearing (cylinder bottom)	1	Pressing in plain bearing and sliding bush.

Figure	Order no. Designation Chapter	Qty.	Comments
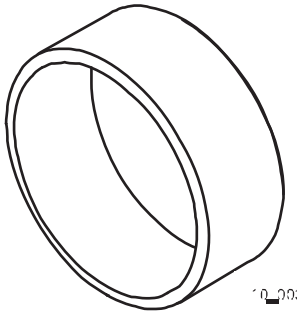	**1X56.138.737** **Insertion aid** ■ Pre-assembling the connection plate	1	Insertion aid for piston 07.010, transmission brake.
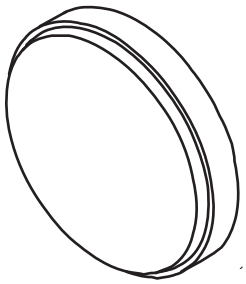	**1X56.138.738** **Press-in device** ■ Pre-assembling the connection plate ■ Completing the clutch housing ■ Assembling the bearing support	1	Inserting tapered roller bearings' outer rings into bearing support. Inserting shaft sealing ring into connection plate.
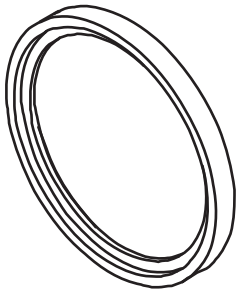	**1X56.138.740** **Adapter ring** ■ Fitting the output cover	1	Adapter ring in conjunction with tool no. 1X53.137.124 Pressing in the shaft sealing ring at the output cover. Alternative for pressing punch no. 1X56.197.443
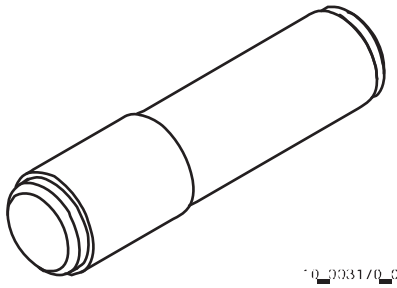	**1X56.138.741** **Press-in mandrel** ■ Removing the connection plate ■ Disassembling the plain bearing (cylinder bottom)	1	Adapter to press off plain bearings.
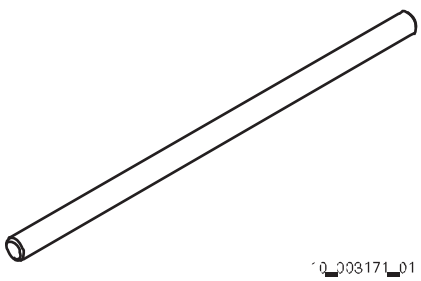	**1X56.138.743** **Press-in mandrel** ■ Pre-assembling the connection plate ■ Completing the clutch housing	1	Driving the three cylindrical pins into the clutch housing.

Figure	Order no. Designation Chapter	Qty.	Comments
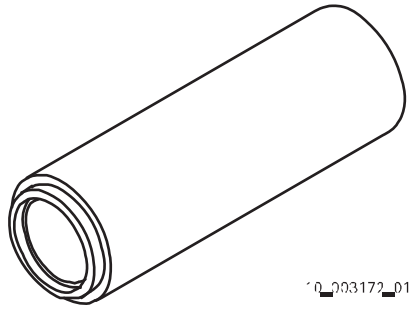	**1X56.138.744** **Pressing punch** ■ Pre-assembling the connection plate ■ Pre-assembling the plain bearing (cylinder bottom)	1	Pressing in cap-shaped seal for MI, S/G and R/C.
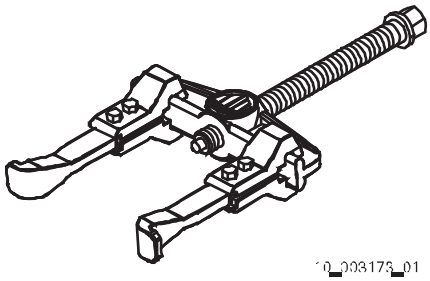	**1X56.138.745** **Puller** ■ Removing the range change group	1	Disassembling the cylindrical roller bearing
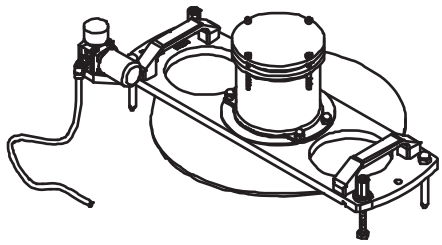	**1X56.138.757** **Counter support**	1	Testing device for ConAct in conjunction with ZF-TESTMAN.
	**1X56.138.803** **Assembly pliers** ■ Removing the connection plate ■ Pre-assembling the plain bearing (cylinder bottom) ■ Completing the gear shift bush (15)	1	
	**1X56.138.804** **Assembly pliers** ■ Removing the clutch housing	1	

Figure	Order no. Designation Chapter	Qty.	Comments
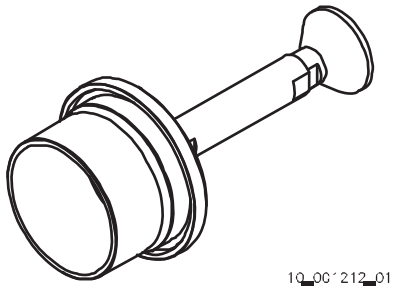	**1X56.197.443** **Pressing punch** ■ Fitting the output cover	1	For shaft sealing ring 0734.300.421
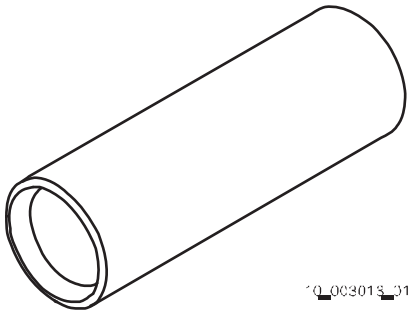	**1X56.197.790** **Sleeve** ■ Disassembling the shift system	1	Protection for S/G shift fork 12.010 when washing
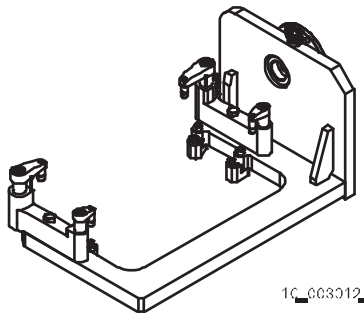	**1X56.197.922** **Assembly fixture** ■ Preparatory work	1	Optional In conjunction with assembly stand no. 1P01.181.850
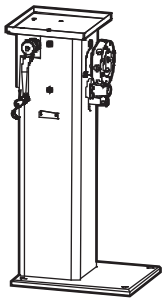	**1P01.181.850** **Assembly stand** ■ Preparatory work	1	Optional
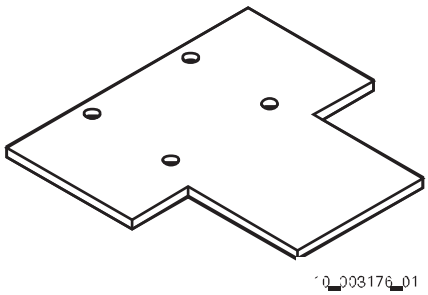	**1X56.138.297** **Base plate** ■ Preparatory work	1	Optional In conjunction with assembly stand no. 1P01.181.850

Figure	Order no. Designation Chapter	Qty.	Comments
	1T66.159.409 Eyelet bolt (M8) ■ Removing the connection plate ■ Fitting the connection plate	2	
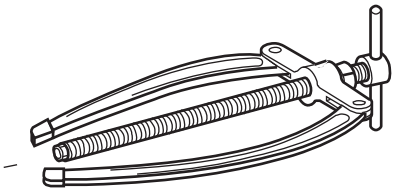	1X56.122.228 Counter support ■ Disassembling the bearing support	1	In conjunction with internal extractor 1X56.122.211
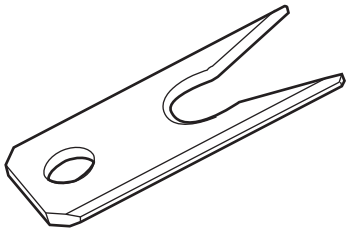	1X56.138.426 Fork ■ Disassembling the planet carrier ■ Assembling the planet carrier	1	
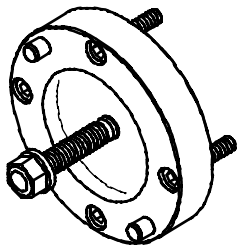	1X56.139.464 Intermediate flange ■ Preparatory work	1	Optional Depending on design of assembly stand 1P01.181.850.
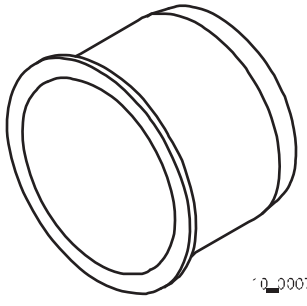	AA01.388.796 Protective sleeve ■ Removing the connection plate	1	R/C cylinder

Figure	Order no. Designation Chapter	Qty.	Comments
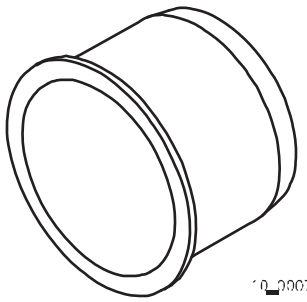	**AA01.388.799** **Protective sleeve** ■ Removing the connection plate	1	S/G cylinder
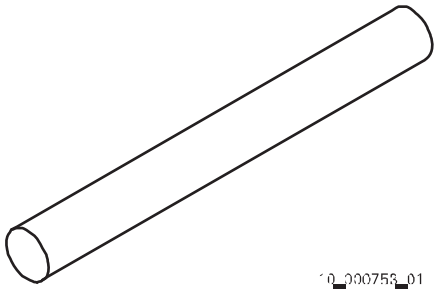	**AA01.388.803** **Bolt** ■ Engage S/G	1	Optional
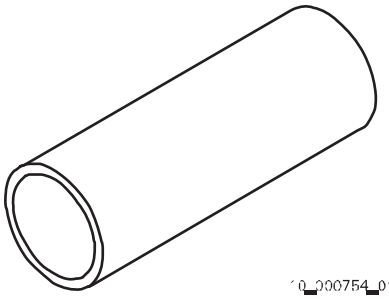	**AA01.388.808** **Sleeve** ■ Assembling the main shaft ■ Measuring the connection plate	1	Tube for bearing outer ring
	**1X56.198.240** **Extracting device** ■ Disassembling the countershaft	1	Extracting tapered roller bearing in conjunction with tool no. 1X56.122.304
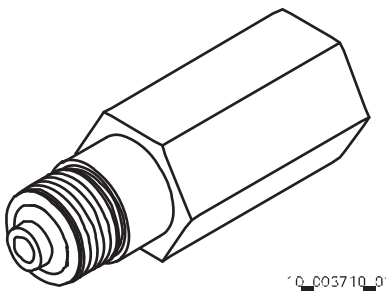	**1P81.215.038** **Adapter** ■ Checking leak tightness	1	

Image No.	Figure	Order no. Application	Qty.	Comments
1		**6008.208.550** **ZF-TESTMAN complete** Scope of supply: – 6008.208.200 ZF-TESTMAN with DPA06 + cable – 6008.208.500 Software & license ticket – 6008.207.025 9-pin diagnostic connector	1	Only for ZF Aftermarket
2		**6008.208.450** **ZF-TESTMAN for ZF customers** Scope of supply: – 6008.208.200 ZF-TESTMANwith DPA06 – cable – 6008.208.400 Software & license ticket	1	After consultation with ZF Friedrichshafen AG.
3		**6008.206.052 adapter cable** 1 adapter	1	
4		**6008.207.050** for DPA05 **6008.207.150** for DPA06 **Adapter cable** On-board diagnosis, e.g., for MAN	1	

The required quantity is listed. Please inquire as to packaging unit before ordering.

Image No.	Figure	Order no. Application	Qty.	Comments
5		**6008.207.051** **Table mode adapter**	1	Adapter cable for programming and configuration purposes and for diagnosis outside the vehicle.
6		**6008.207.025** **9-pin diagnostic connector** (Universal adapter in conjunction with a terminal tester)	1	
7		**6008.207.065 Complete adapter** for test bench wiring including adapter cable 6008.308.601 9-pin adapter cable 6008.206.056 25-pin adapter cable	1	
8		**6008.207.077** **Adapter cable** On-board diagnosis, e.g., for IVECO	1	

The required quantity is listed. Please inquire as to packaging unit before ordering.

Truck Transmission Overview

The TRAXON transmission system is divided into the following model ranges for use in trucks.

- 12.1 (12-speed, short version)
- 12.2 (12-speed, long version)
- 16 (16-speed)

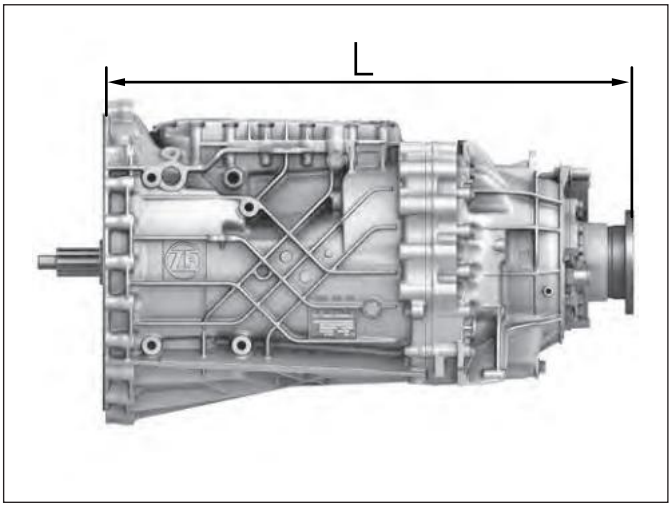

03593[illegible]3

TRAXON truck transmission data

Model range	Installation length (L) [mm]	Approx. oil quantity for initial fill in liters		Approx. oil quantity for oil change in liters		Oil grade in accordance with ZF List of Lubricants TE-ML	Weight from [kg]			
		TRAXON	1)	TRAXON	1)		TRAXON	2)	with INTARDER	2)
12.1	878	12.5	22.5	11	19	see type plate	253	264	335	355
12.2	910	13.5	23.5	12	19	see type plate	265	279	347	369
16	965	14.5	24.5	13	20.5	see type plate	290	303	372	394

1) TRAXON with INTARDER
2) incl. transmission oil

1358.50[illegible].030
2017-06

Bus Transmission Overview

For use in buses, the TRAXON transmission system is equipped with an INTARDER.

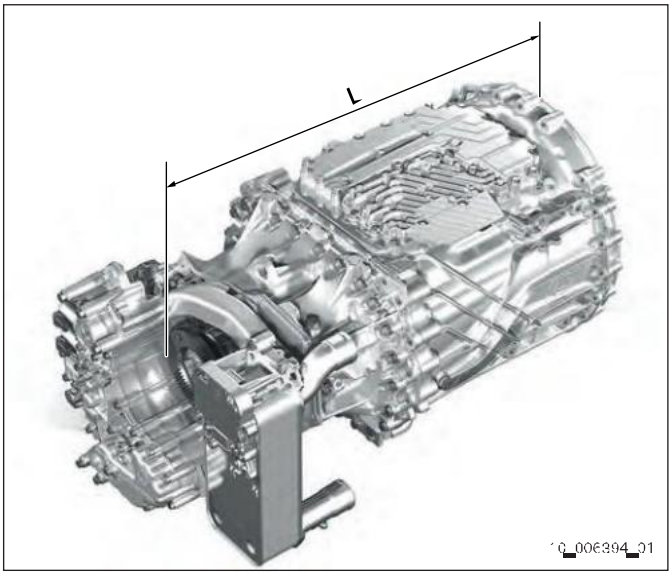

TRAXON bus transmission data

Installation length (L) [mm]	Approx. oil quantity for initial fill in liters	Approx. oil quantity for oil change in liters	Oil grade in accordance with ZF List of Lubricants TE-ML	Weight from [kg] without transmission oil	Weight from [kg] with transmission oil
878	22.5	19	see type plate	335	355

Transmission Version

TRAXON basic transmission

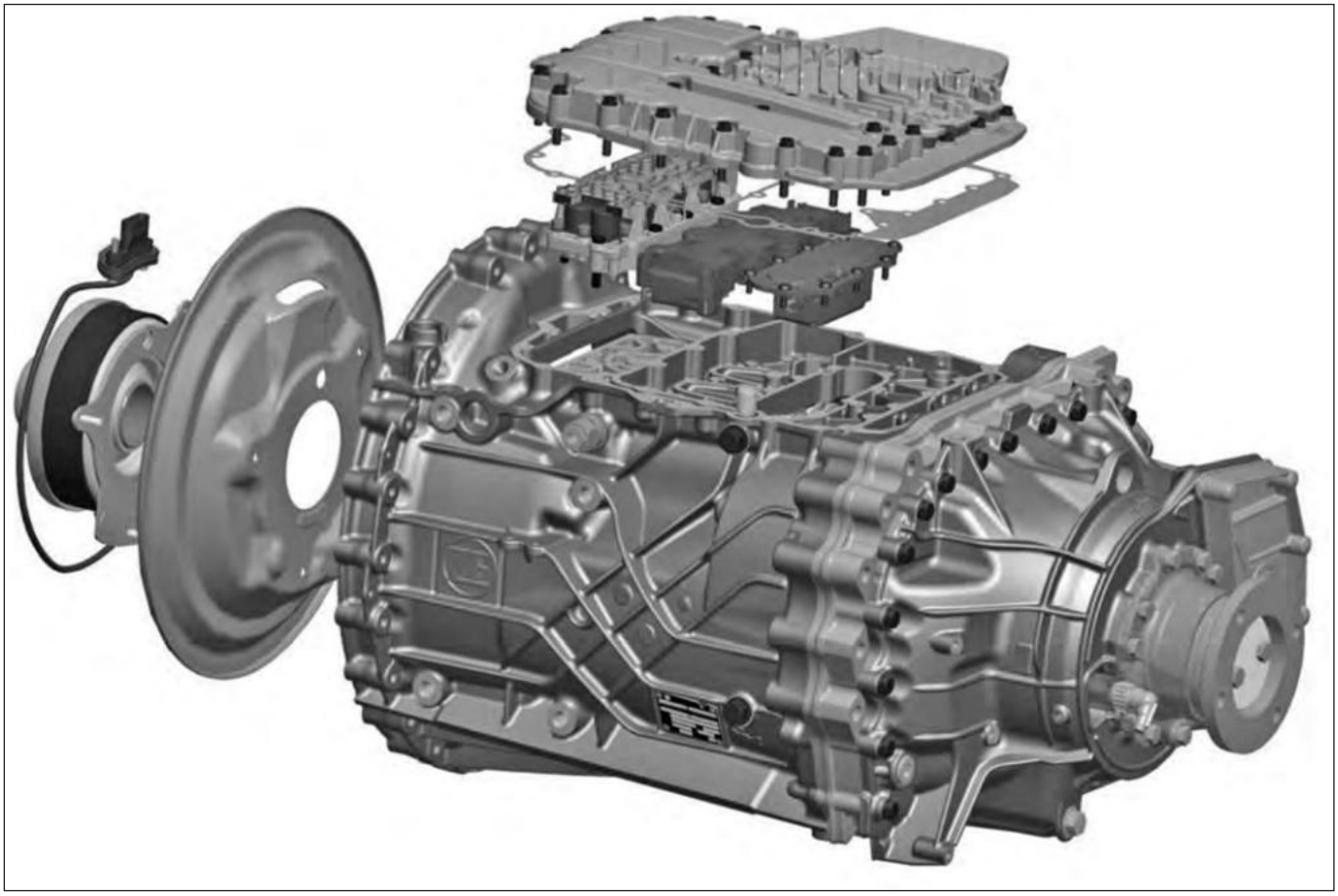

Electronic components 035888

TRAXON with INTARDER

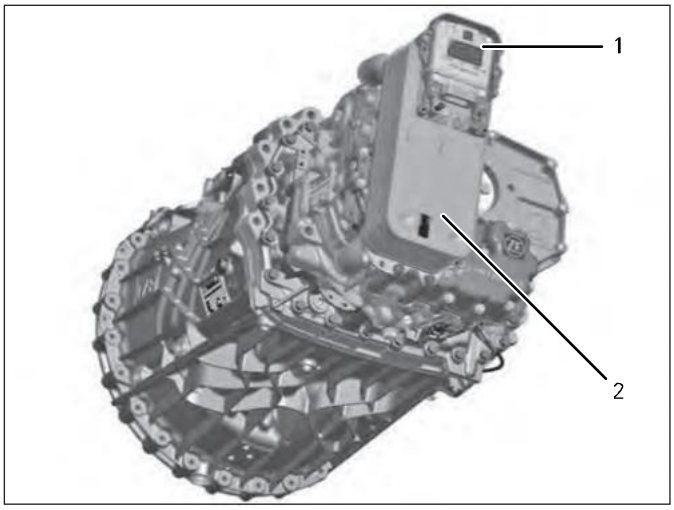

Legend 035883_1
1 INTARDER control unit
2 Heat exchanger

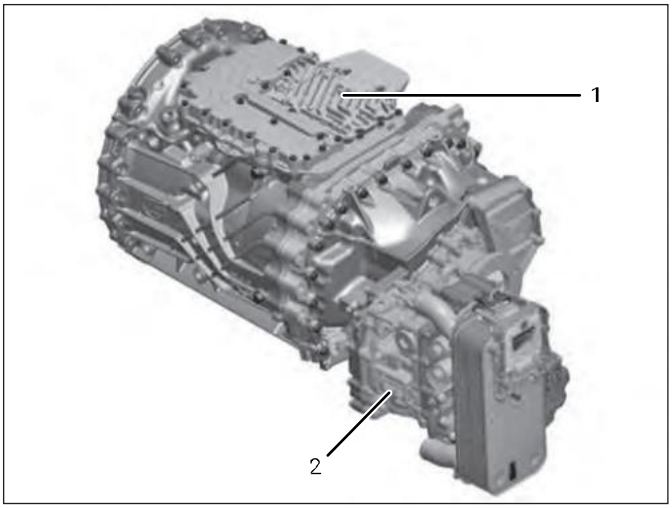

Legend 035883_1
1 Transmission control
2 INTARDER

Transmission Interfaces

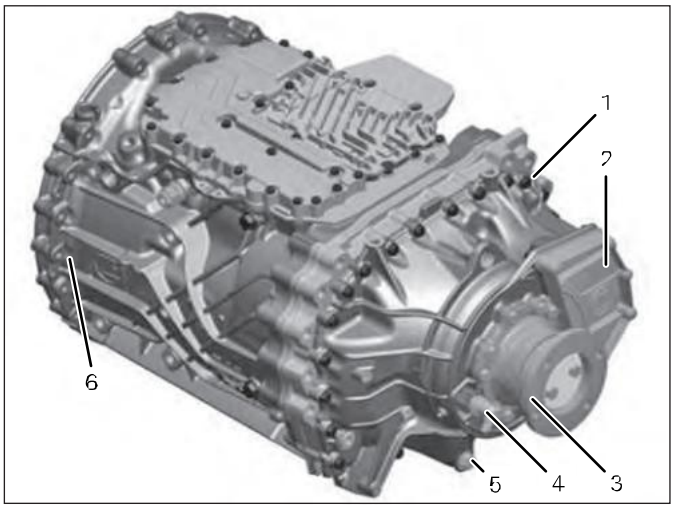

035878

Legend

1 Transmission housing
2 PTO connection
3 Output flange
4 Speedo connection
5 Oil drain
6 Clutch housing

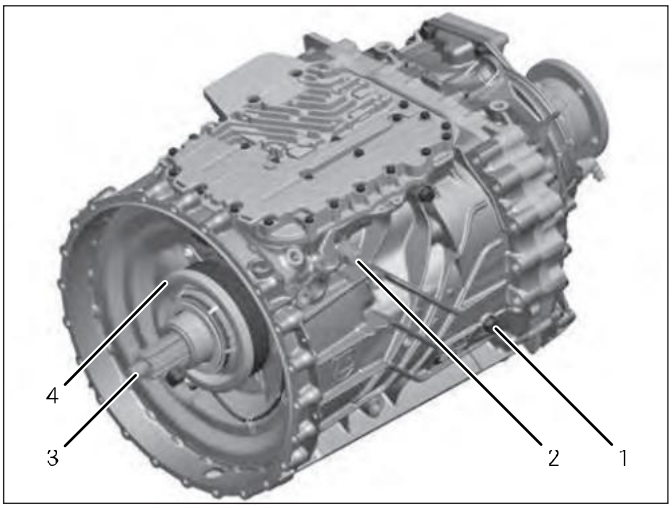

035879

Legend

1 Oil filling point and oil overflow
2 Compressed-air connection
3 Input shaft
4 Clutch actuation unit (ConAct)

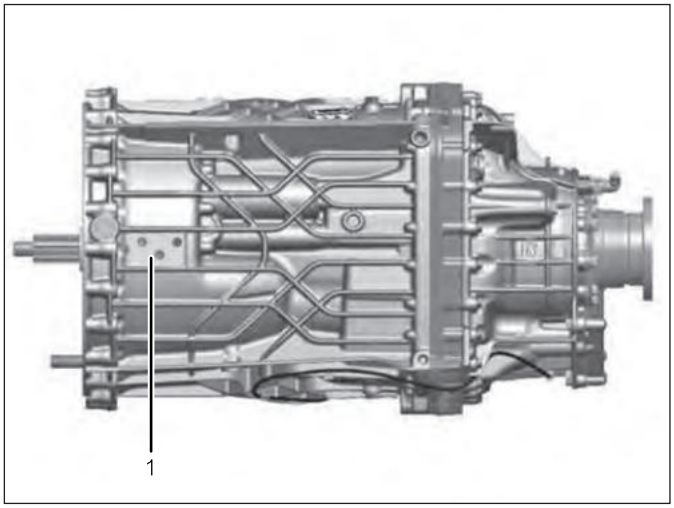

035880

Legend (viewed from below)

1 Venting

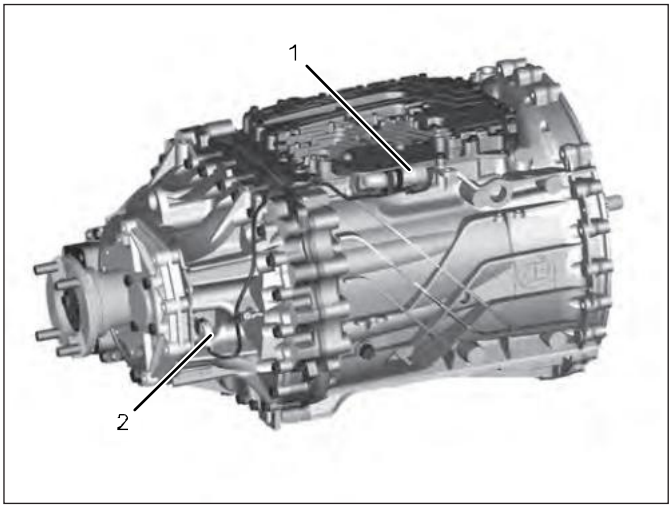

036222

Legend

1 Vehicle-end plug
2 Speed sensor

Transmission Setup

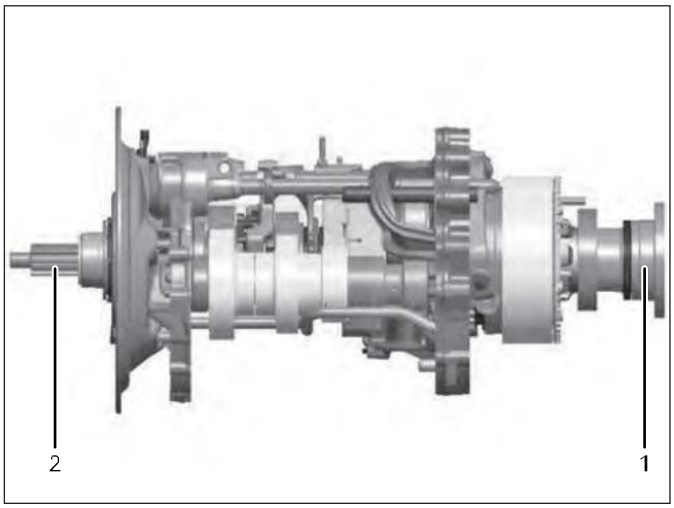

035884

Legend

1 Output
2 Input shaft

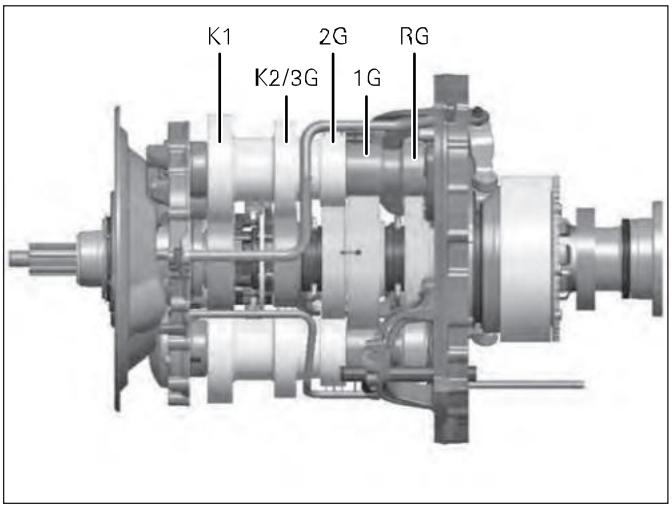

035885

Legend

K1 Constant 1
K2/3G Constant 2/3rd gear
2G 2nd gear
1G 1st gear
RG Reverse gear

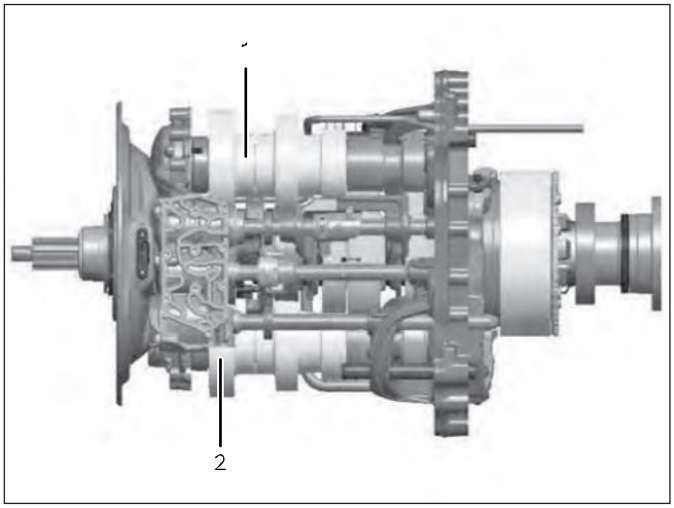

035886

Legend

1 Countershaft brake
2 Countershaft pump

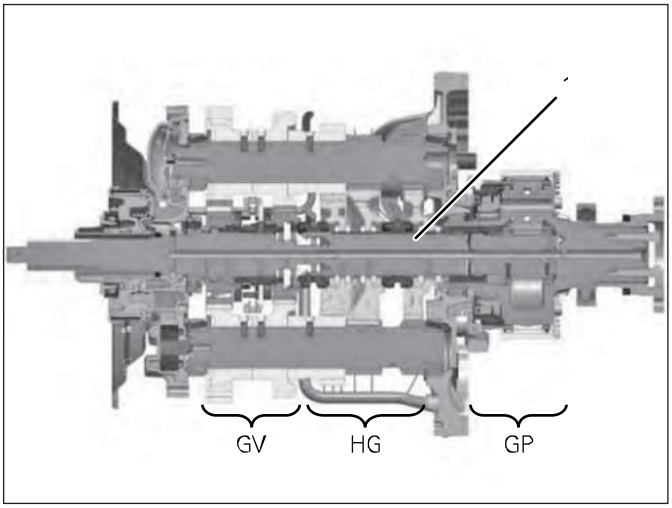

035887

Legend

1 Main shaft
S/G Splitter group
MT Main transmission
R/C Range change group

Type Plate

TRAXON type plate

The type plate (1) is located on the left side of the transmission when viewed from the output. The type plate contains the most important data for the identification of the transmission.

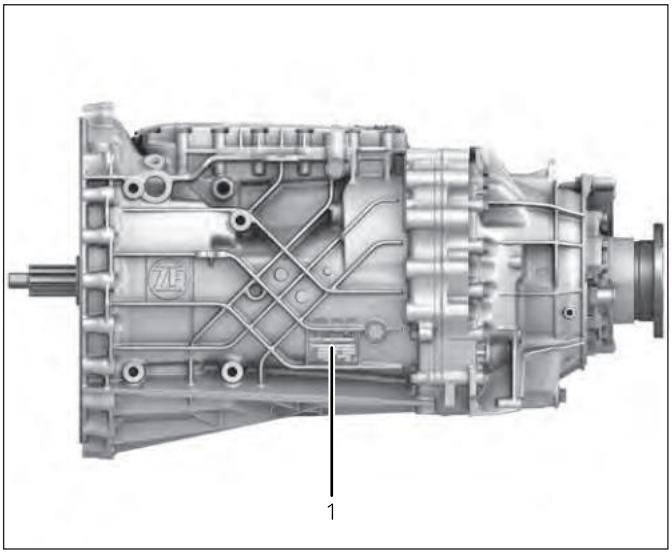

Transmission type plate 03593

The type plate contains the following information:

1 Transmission family / Transmission type
2 Parts list [BoM] no.
3 Serial no.
4 DMC code
5 Customer order/reference no.
6 Transmission ratio
7 Speedometer ratio (impulses/revolutions)
8 Type of PTO
9 PTO ratio
10 Oil quantity
11 List of Lubricants

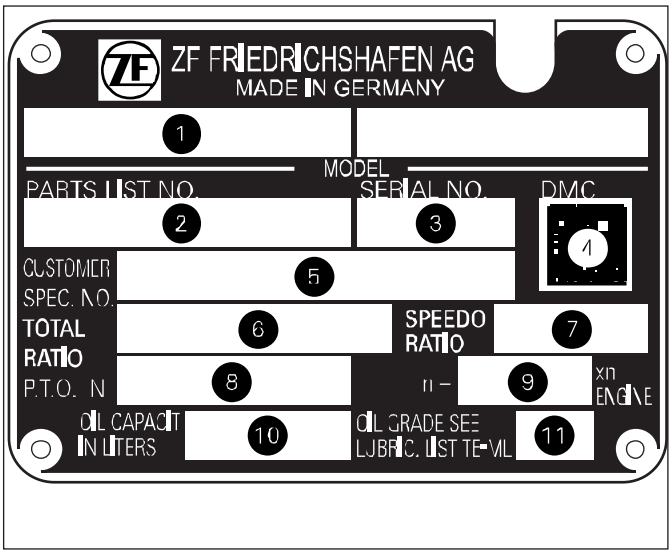

Type plate (example) 03a590

The following data should always be provided when making inquiries or in the case of repairs:

- Transmission type
- Parts list [BoM] no.
- Serial no.

The ConAct (clutch actuation unit) has its own type plate.

INTARDER type plate

The type plate (1) is located on the side of the INTARDER housing.

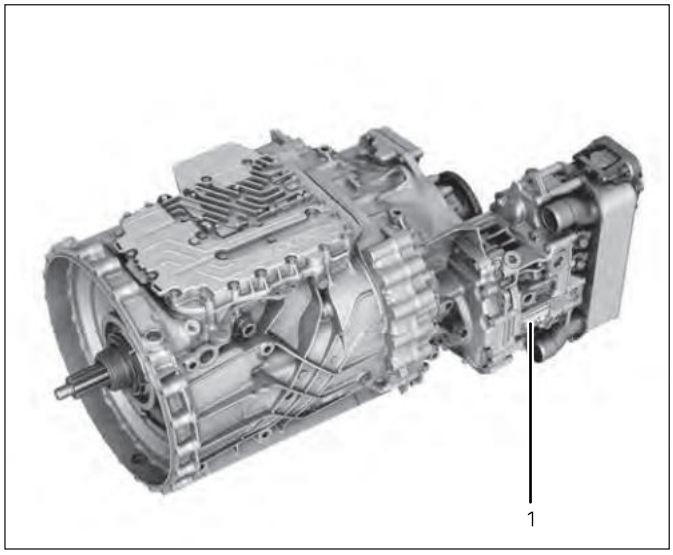

INTARDER type plate 03602_1

The type platecontains the key data of the INTARDER.
The following information must always be provided when making inquiries, placing orders or carrying out repairs:

- Parts list [BoM] no. of the INTARDER
- Serial no. of the INTARDER

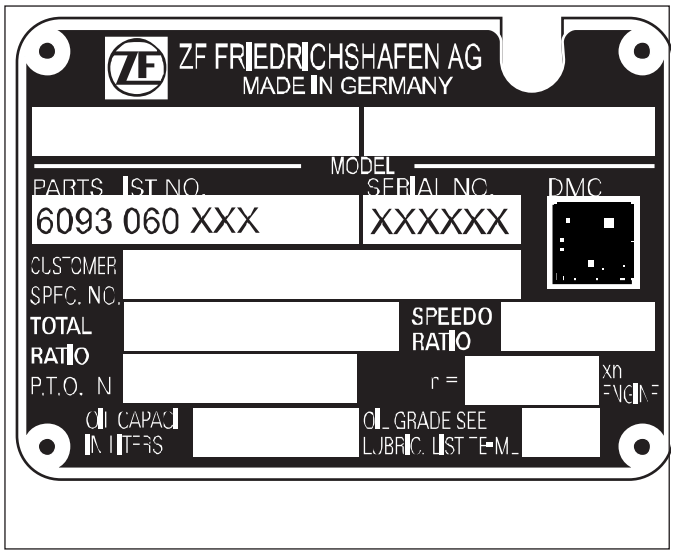

Type plate (example) 03ba90_3

Type plate: Control unit

The INTARDER serial number on the INTARDER and the control unit must match.

Key data of the control unit:

1 Control unit parts list [BoM] number
2 Barcode, consisting of ZF no. and serial number
3 Data Matrix Code (DMC)
4 INTARDER serial number
5 General certification number by the Federal Motor Transport Authority
6 Customer number, if available
7 Software no.
8 Control unit serial number
9 Control unit designation

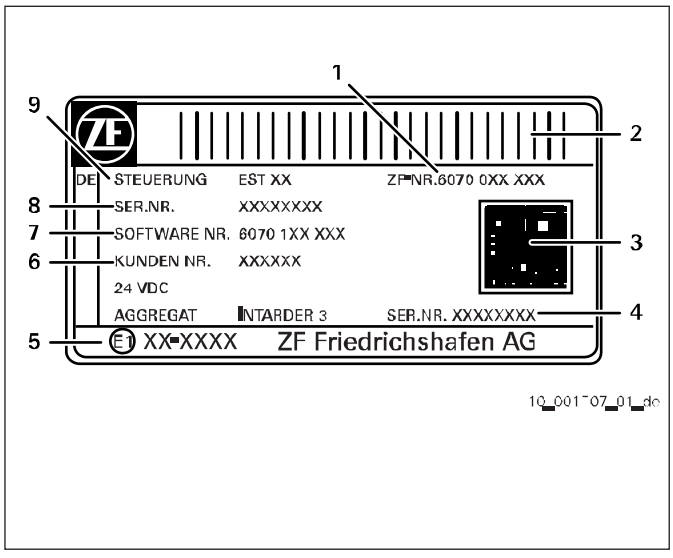

Control unit type plate (example)



Transport

For lifting and transporting, only use the three lugs on the transmission that are intended for this purpose.
For lifting and transporting, use chain sling **1T66.160.432**.

- The hook size (max. hook size 10 according to DIN 15401) must be selected in such a manner that the hooks move freely and are not supported inside the lugs (risk of breakage).
- Select the chain length and angle in such a way that the bending forces of the lugs are as low as possible.
- The transmission must not be suspended at its input shaft, e.g. during transport (damage to bearings and gearings).
- Using slings on the TRAXON for transport purposes is not permitted either.
- Suspension on the transmission is not permitted if it is flanged to the engine. The lugs are designed to carry the weight of the transmission only.
- The maximum permissible load on the lugs may not be exceeded (refer to installation drawing or labeling on the transmission).

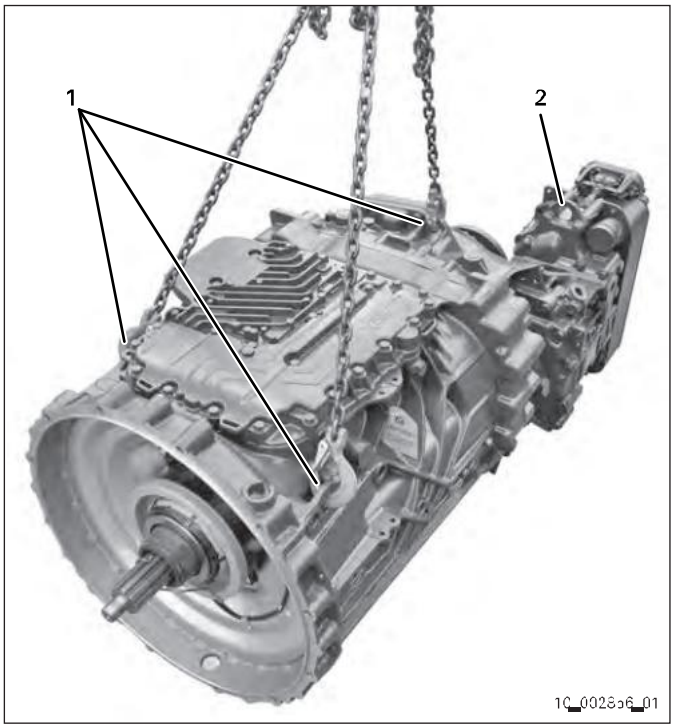

ZF will not accept liability for damage to transmission components caused by inappropriate transport.

Transmissions with INTARDER
For lifting and transporting, only use the three lugs **(1)** on the basic transmission.
The lug **(2)** at the INTARDER shall **not** be used; it is not designed to lift or transport the transmission.

Preparatory Work

In these repair instructions, we provide a description of the disassembly and assembly without the use of stationary assembly stand **1P01.181.850**.

For TRAXON with INTARDER, the additional INTARDER repair instructions are required.

- Repair instructions INTARDER for Buses, order no. 6093.751.101
- Repair instructions INTARDER for Trucks, order no. 6093.751.102

In these repair instructions, you will also find a description of the installation/removal of the INTARDER.

The following points must be observed for repair:

- In addition to the repair instructions, the ZF Service Information details should be available. They can be obtained from all ZF Service Centers or via the ZF-ServiceLine.
- Chain sling **1T66.160.432** is used for lifting or transporting.
  If the cast-on lugs on the transmission are used, always use all three lugs. Two lugs on the clutch housing and one on the R/C housing.
- Make oil collector available.
- Before starting repair work, remove screw plug on the oil drain. Collect the oil in an oil collector.
- In case of damaged heat exchangers and a consequential water ingress in the basic transmission, observe the following:
  - Water in the transmission oil damages molybdenum-coated components to such an extent that their functioning is no longer guaranteed.
  - All molybdenum-coated components such as synchronizer rings, shift forks, transmission brakes, etc., must always be replaced.
  - If the components are not exchanged, operating errors in the transmission might occur.
- Make necessary special tools available.
- Damaged parts must not be reused.
- Metal bead seals may not come into direct contact with cold cleaners. After cleaning metallic contact surfaces, the cold cleaner must be volatilized before the metal bead seal is applied. Metal bead seals must not be damaged during assembly (e. g., by tools, screws, etc.).
- Prior to assembly, compare the part number with the spare parts catalog. If the part number does not match with the data in the spare parts catalog, consultation with ZF is required.
- If a tightening sequence is specified, it must be observed.
- The specified tightening torques must be adhered to.
- The transmission must be tested on a test bench for function and leakage after each repair.

We recommend the stationary assembly stand **(3)** **1P01.181.850** in connection with base plate **(4)** **1X56.138.297**, intermediate flange **(2)** **1X56.139.464** and assembly fixture **(1)** **1X56.197.922** for specialized workshops. Further information is available from ZF Aftermarket.

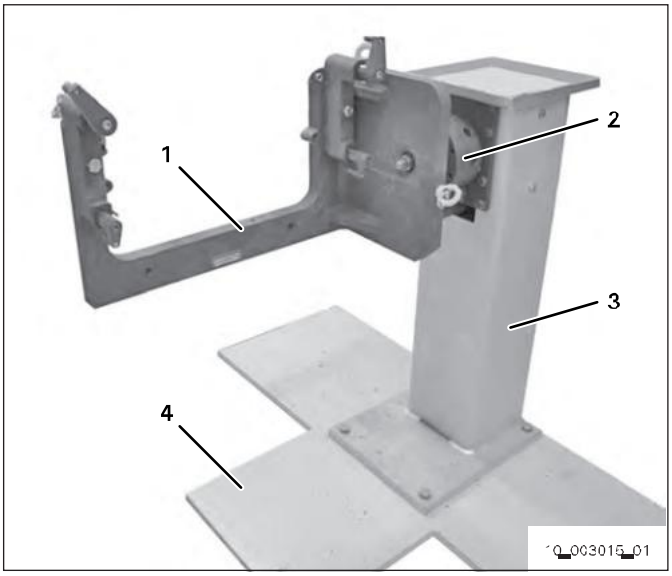

Fit transmission to assembly fixture **1X56.197.922**.

Drive transmission into fixing bolts **(1)**.

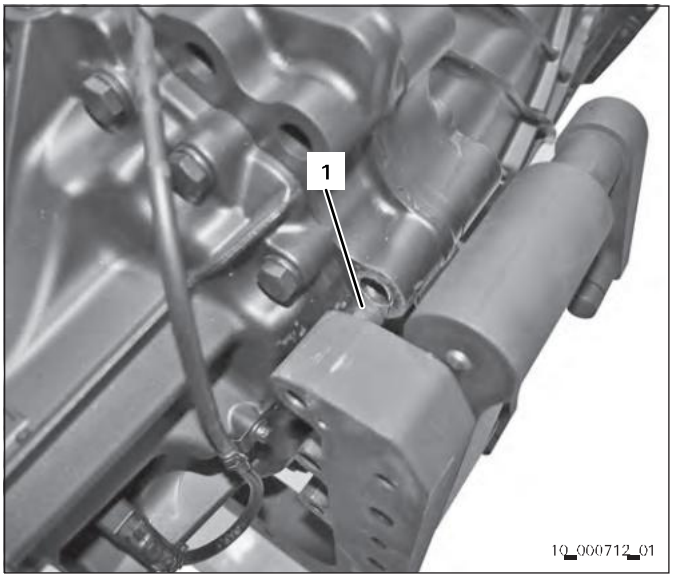

Fit transmission to assembly fixture **1X56.197.922** using clamping shoes **(1)**.
Tightening torque: **20 Nm**

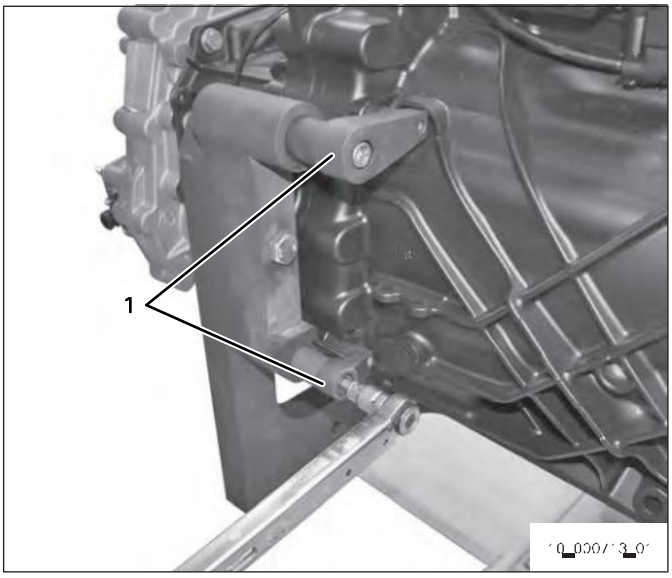

Fit transmission to assembly fixture **1X56.197.922** using clamping shoes (**1**).
Tightening torque: **20 Nm**

The bolt (**2**) must snap into place before working at the transmission.

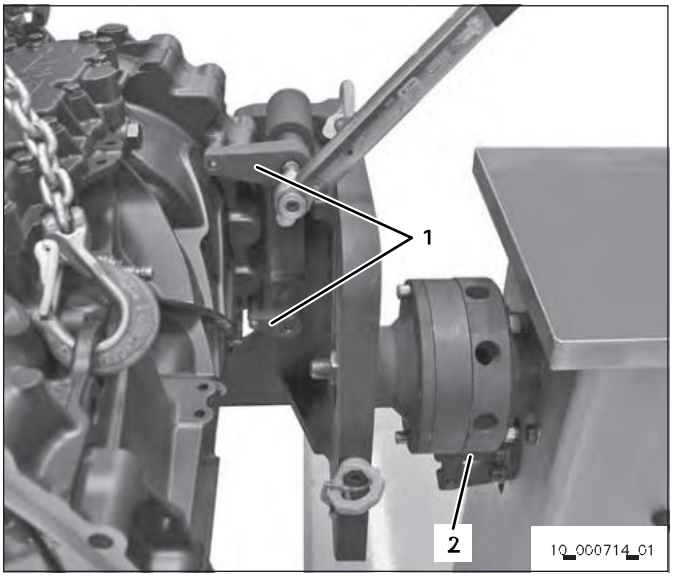

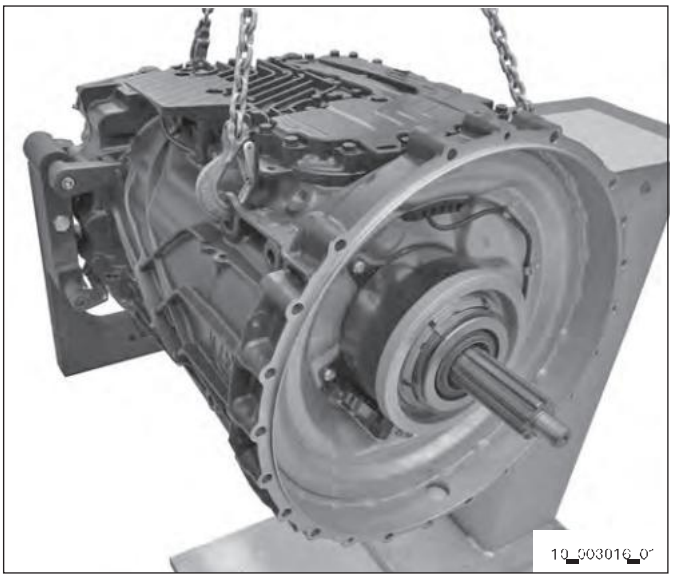

View input-end

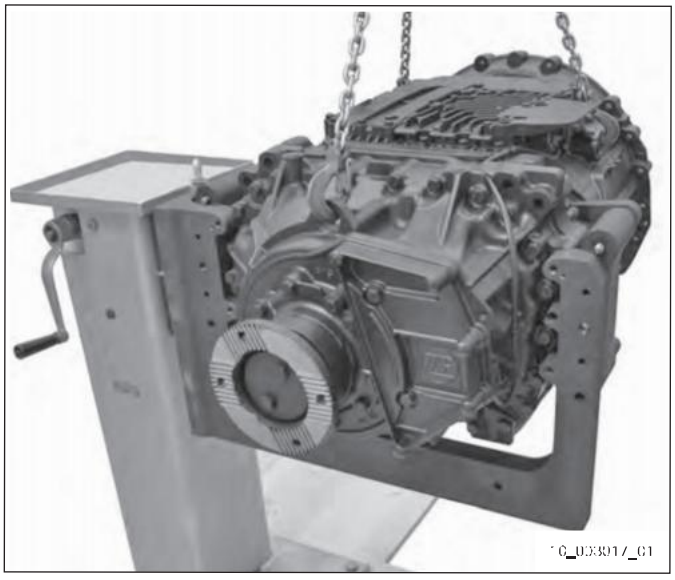

View output-end

Bleeding the ConAct

⚠ CAUTION

Risk of injury due to uncontrolled movement of the parts.
Slight to moderate injury possible.
⇨ Bleed the ConAct.

If removing, installing or working on the transmission, bleed the ConAct first. If the ConAct is not bled in the event of malfunctions (the ConAct remains extended), the high system pressure may result in body parts being trapped in the operating area of the ConAct.

Observe the following once the transmission system has been bled:
- Transmission is installed in the vehicle:
  The ConAct is made harmless in the vehicle via the pressure plate.
- Transmission is removed:
  The ConAct is made harmless by hand or via the integrated spring.

Bleeding the ConAct with the diagnostic unit

1. Connect the diagnostic unit to the transmission system (e.g., 6008.208.450 [diagnostic unit], 6008.208.550 [diagnostic unit], 6008.208.650 [diagnostic unit]).
2. Bleed the ConAct.
   → The ConAct is depressurized. Work on the transmission may now be performed.

Manually bleeding the ConAct

Only manually bleed the ConAct in an exceptional case (e.g., in the event of a malfunction).

1. Remove the screw plug **(1)**.

   → The vent screw **(2)** is now accessible through the opening.

2. Loosen the vent screw **(2)** and wait until the air has escaped.

   - Use a magnetic hexagon socket wrench.
   - Leave the hexagon socket wrench on the vent screw **(2)** and wait until the air has escaped. Otherwise, there is a risk that the vent screw **(2)** will be pulled out of its guide and fall next to the guide.
   - No dirt may be allowed to enter the inside of the ConAct via the vent screw.

3. Tighten the vent screw.
   Tightening torque: **10 Nm**

4. Screw in and tighten the screw plug **(1)** with new sealing ring.
   Tightening torque: **35 Nm**

   → The ConAct is depressurized. Work on the transmission may now be performed.

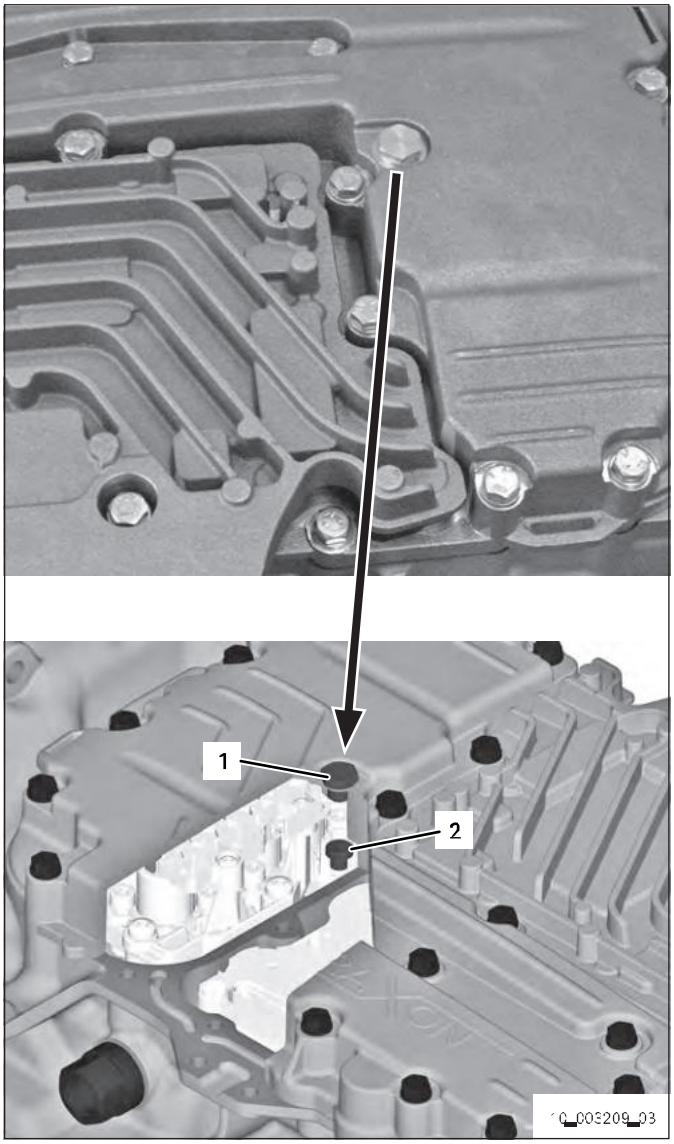

Disassembling the Transmission

Removing the transmission control

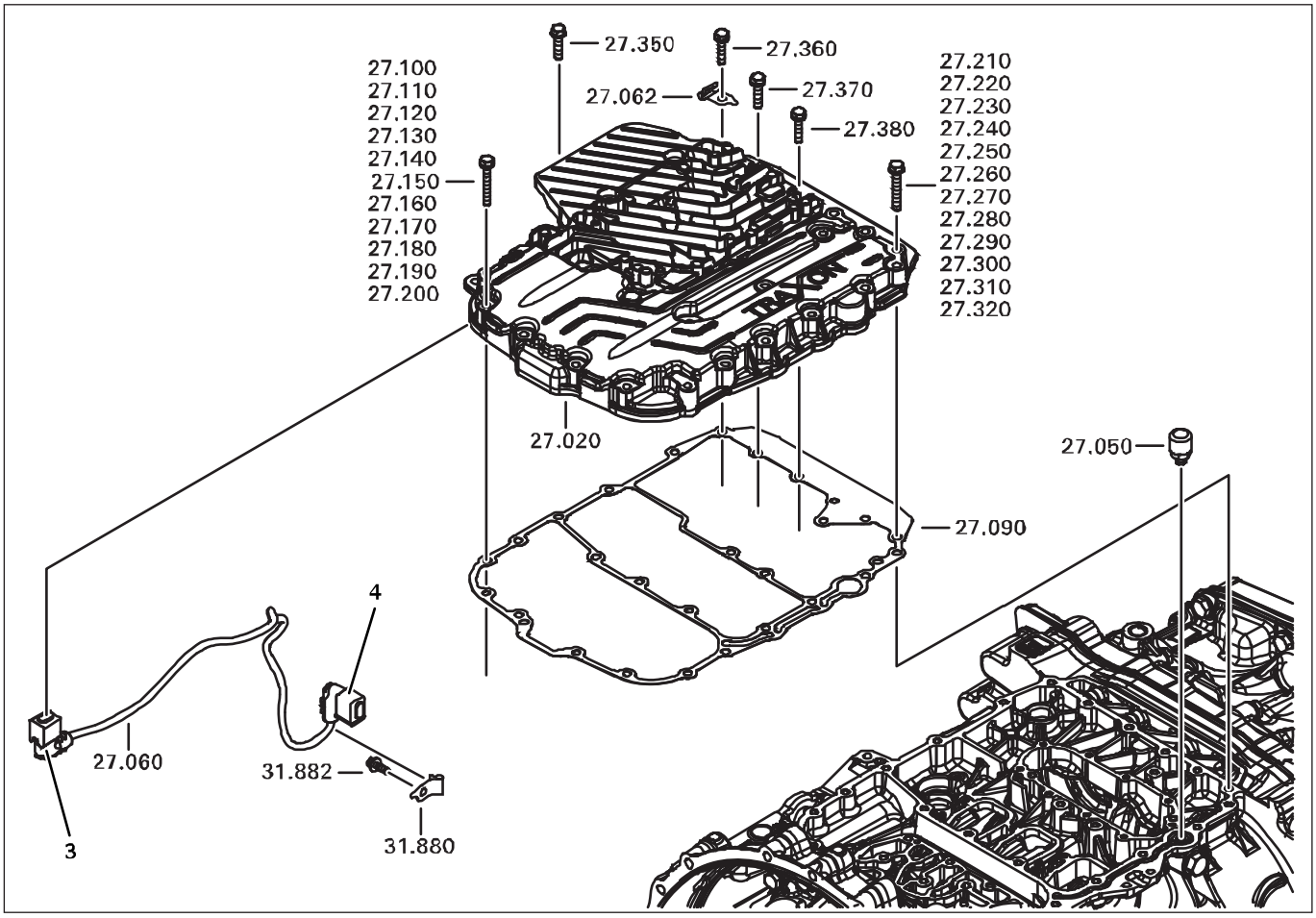

036a86

Legend

27.020	Transmission control	27.150	Hexagon screw **(1)**	27.270	Hexagon screw **(1)**
27.050	Breather	27.160	Hexagon screw **(1)**	27.280	Hexagon screw **(1)**
27.060	Cable TRAXON	27.170	Hexagon screw **(1)**	27.290	Hexagon screw **(1)**
	Socket connector **(3)**	27.180	Hexagon screw **(1)**	27.300	Hexagon screw **(1)**
	Socket connector **(4)**	27.190	Hexagon screw **(1)**	27.310	Hexagon screw **(1)**
27.062	Cable clamp	27.200	Hexagon screw **(1)**	27.320	Hexagon screw **(1)**
27.090	Flat seal	27.210	Hexagon screw **(1)**	27.350	Hexagon screw **(2)**
27.100	Hexagon screw **(1)**	27.220	Hexagon screw **(1)**	27.360	Hexagon screw **(2)**
27.110	Hexagon screw **(1)**	27.230	Hexagon screw **(1)**	27.370	Hexagon screw **(2)**
27.120	Hexagon screw **(1)**	27.240	Hexagon screw **(1)**	27.380	Hexagon screw **(2)**
27.130	Hexagon screw **(1)**	27.250	Hexagon screw **(1)**	31.880	Cable clamp
27.140	Hexagon screw **(1)**	27.260	Hexagon screw **(1)**	31.882	Hexalobular driving screw

Hexagon screw **(1)** M8x55
Hexagon screw **(2)** M8x35

1 Remove cable **27.060** from the cable clamps **27.062, 31.880**.

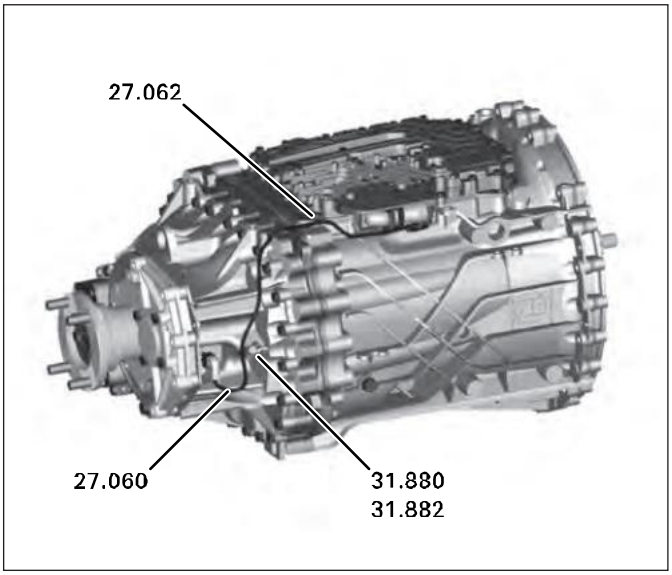

036034_3

The cable clamp **31.880** is installed on the transmission housing by means of a hexalobular driving screw **31.882**.

2 **Observe the following:**

- Clean strongly contaminated plug connections prior to unlocking.
- An excessively high physical effort during the unlocking leads to breakage of the locking slide **(6)**.

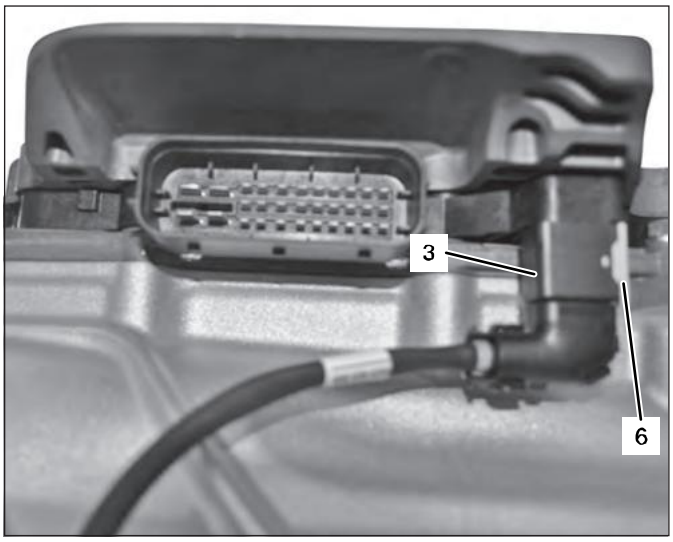

036225_2

To unlock the plug connection, pull out the locking slide **(6)** from the socket connector **(3)** until end stop; if necessary, use a tool (e.g., a screwdriver).

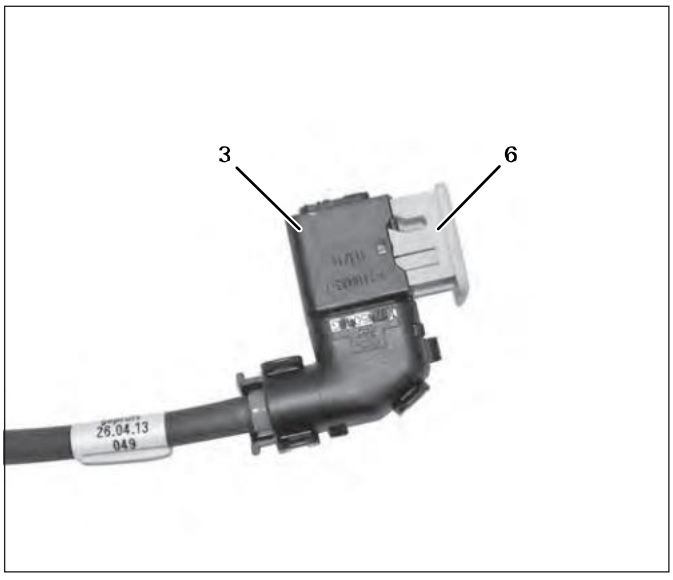

036494_1

Pull out the locking slide **(6)**using a small screwdriver for instance.
Pull off the socket connector **(3)** from the transmission control.

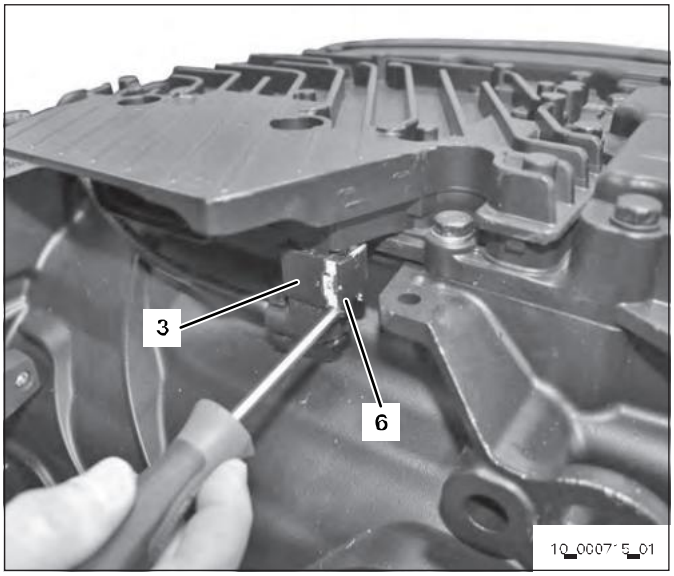

3 **Observe the following:**

- Clean strongly contaminated plug connections prior to unlocking.
- An excessively high physical effort during the unlocking leads to breakage of the locking slide **(6)**.

To unlock the plug connection, pull out the locking slide **(6)** from the socket connector **(4)** until end stop; if necessary, use a tool (e.g., a screwdriver).

Pull out the locking slide **(6)**using a small screwdriver for instance.
Disconnect the socket connector **(4)** from the speed sensor.

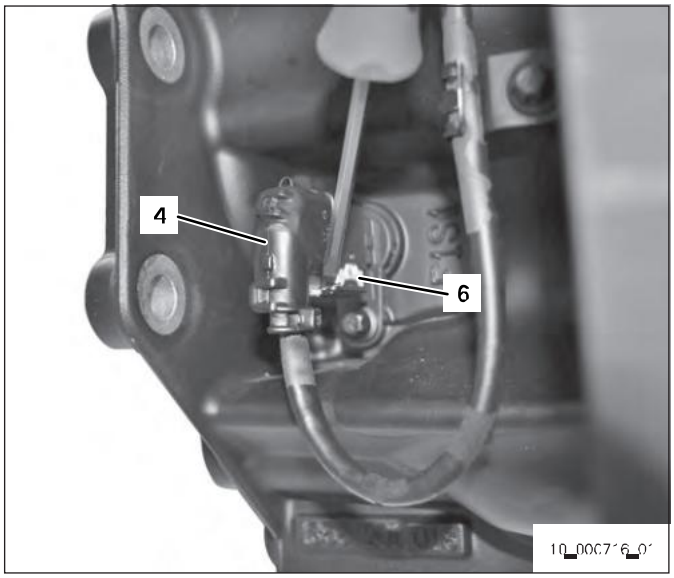

4 Remove 27 M8 hexagon screws from the transmission control **27.020** and screw in two guide pins **(5)**.

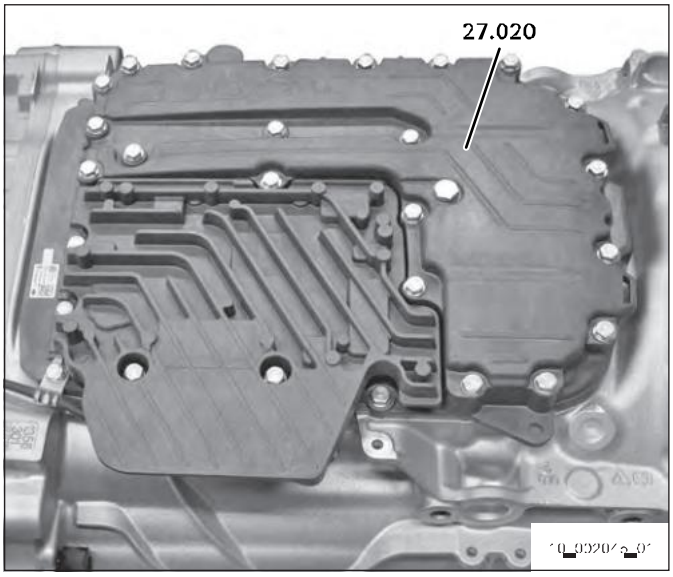

5

The transmission control **27.020** contains integrated electronic components. Comply with ESD protection *(also refer to Chapter ESD Protection)*.

Carefully lift the transmission control **27.020** and do not place it on the electrical plug connectors or sealing faces.

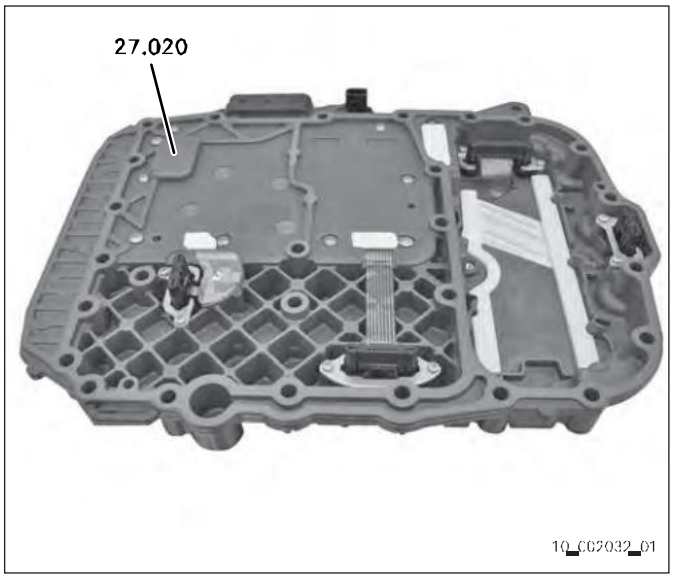

6 Remove guide pins **(5)** and seal **27.090**.

7 If required, remove the breather **27.050**.

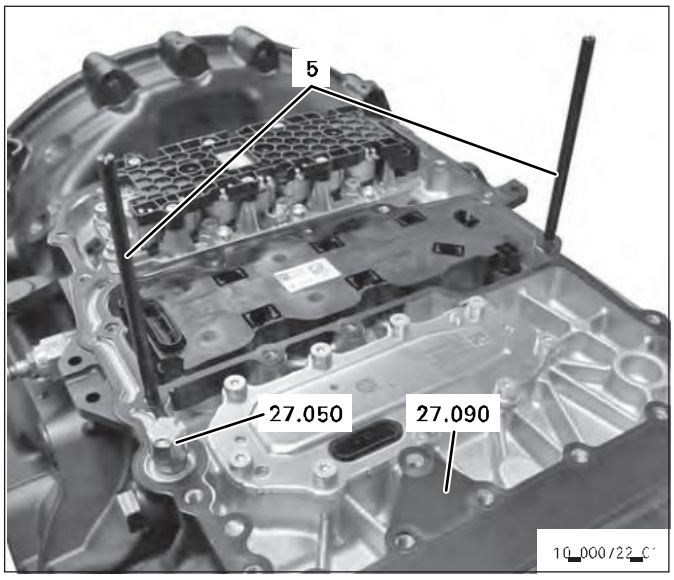

Removing the valve block

⚠ Comply with ESD protection *(refer to Chapter ESD Protection)*.

1 Remove the transmission control *(refer to Chapter Transmission Control)*.

2

NOTICE

Material damage to the valve block possible.
⇨ Only loosen the listed torx screws.

If screws other than those specified here are loosened, this can cause premature damage/ malfunctions on the valve block.

- Loosen the outer seven torx screws **(1)** on the valve block **27.010**.
  The torx screws **(1)** cannot be removed, they are attached to the valve block by means of a loss-prevention device.

- Loosen the three inner torx screws **(2)** on the valve block.
  The torx screws **(2)** cannot be removed, they are attached to the valve block by means of a loss-prevention device.

4 Lift the valve block **27.010** and, in doing so, do not touch the plug, solenoid valves or pressure sensor contacts.

5

The seal **(4)** is attached to the valve block with two pins **(3)**.

Remove the seal **(4)**.

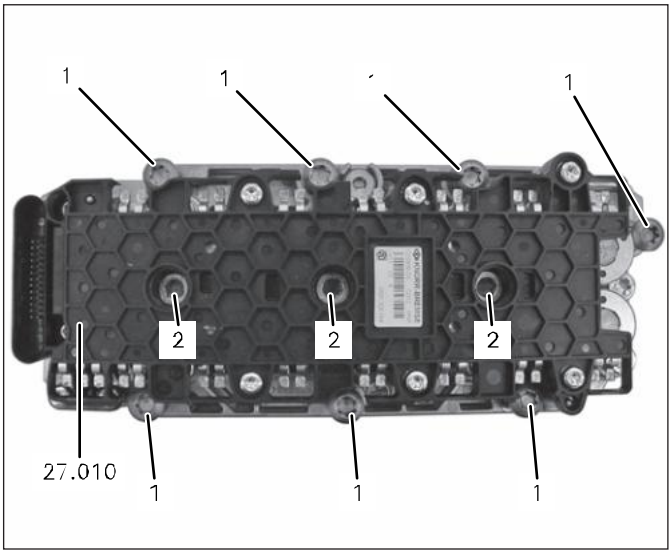

035598_1

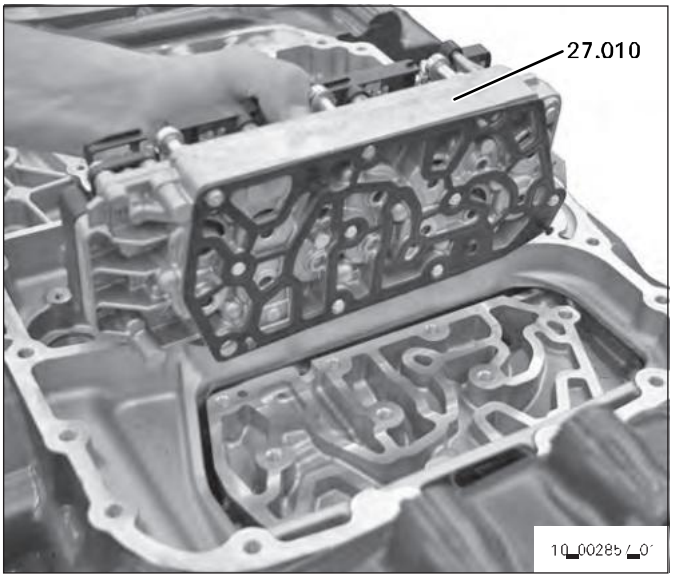

10_00285_01

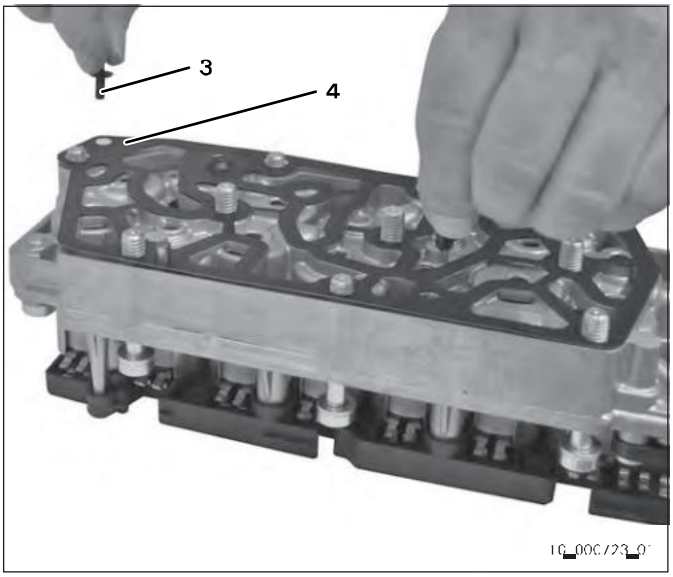

10_00023_01

Removing the sensor module

⚠ Comply with ESD protection *(refer to Chapter ESD Protection)*.

1 Remove the transmission control *(refer to Chapter Transmission Control)*.

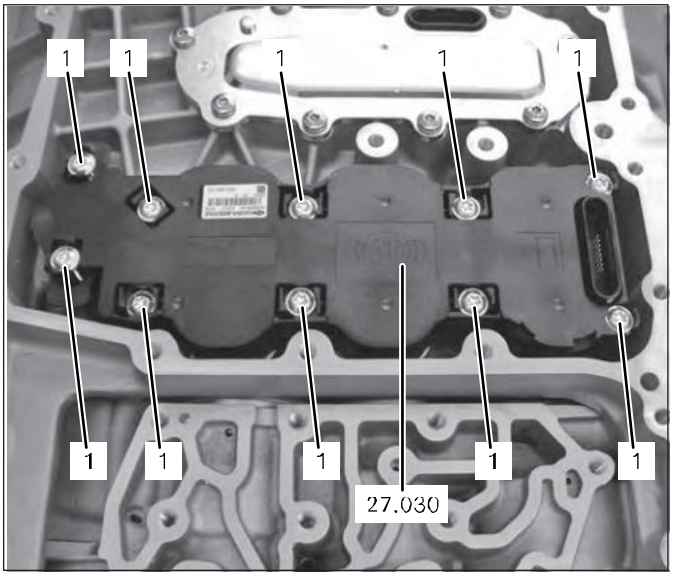

035600_1

2

Do not use a cordless screwdriver or impact wrench.
Sensor module **27.030** may be damaged.
To avoid damaging the sensor module **27.030** , loosen screws in succession in two steps.

Loosen all ten torx screws **(1)** in succession on the sensor module **27.030** until they slightly touch the loss-prevention device. Then lift the sensor module **27.030** and loosen the ten torx screws until the sensor module **27.030** can be removed.

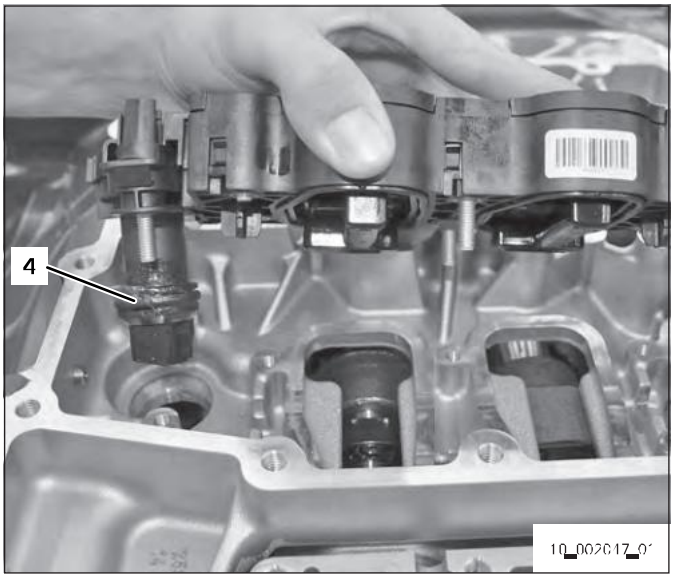

10_002017_01

3 Lift off sensor module **27.030**.

4 Remove O-ring **(4)**.

5 Remove three seals **(5)** from the sensor module **27.030**.

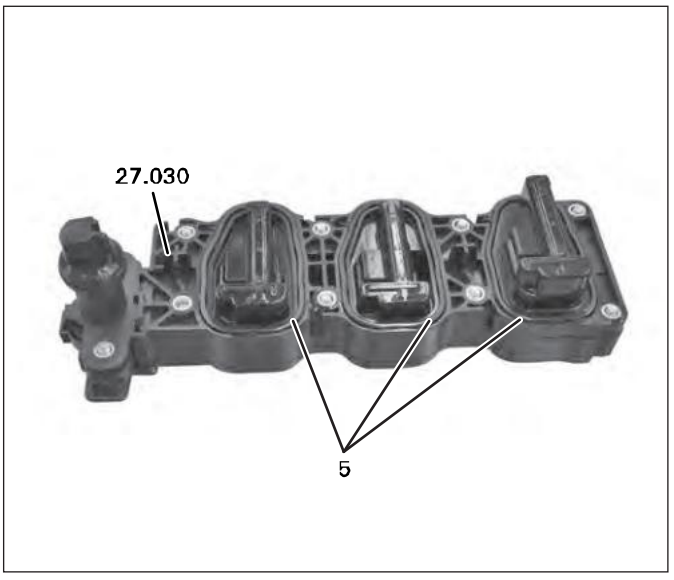

036603

Removing the selector actuator

⚠ Comply with ESD protection *(refer to Chapter ESD Protection)*.

1 Remove the transmission control *(refer to Chapter Transmission Control)*.

2

Do not use a cordless screwdriver or impact wrench.

Loosen nine torx screws **(1)** on the selector actuator. The torx screws cannot be removed, they are attached to the selector actuator by means of a loss-prevention device.

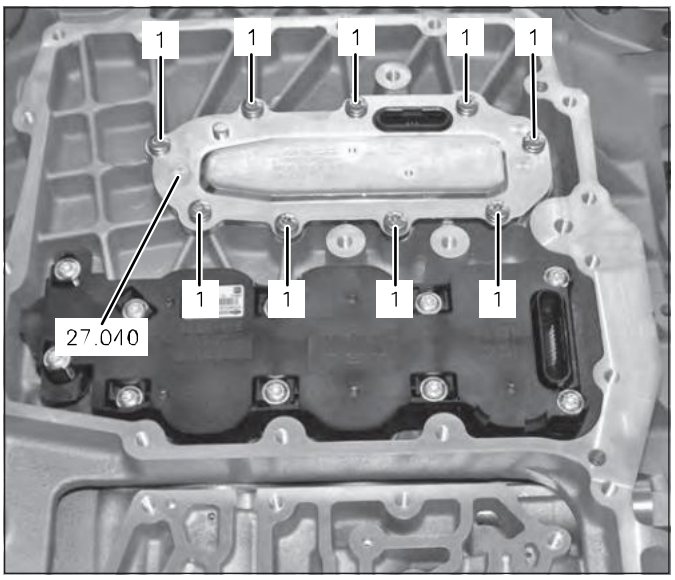

3 Remove selector actuator **27.040** and seal **(2)**. The seal **(2)** is attached to the selector actuator by a loss-prevention device.

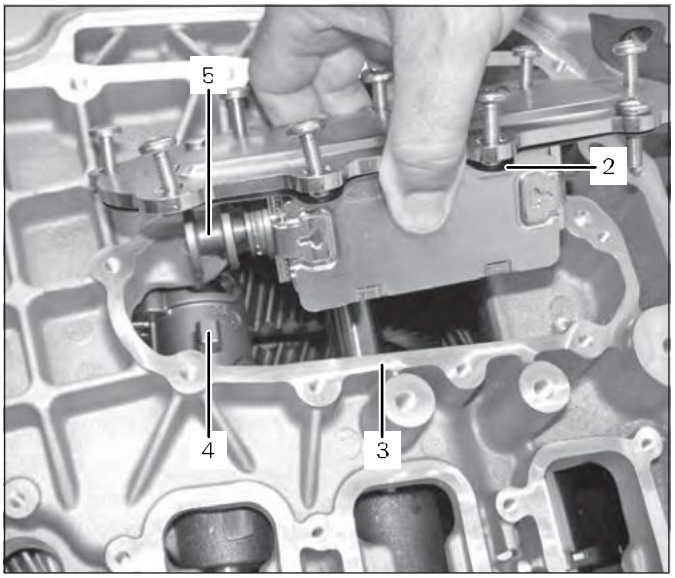

4 The splash protection **27.042** is only installed on model range 16.
Remove splash protection **27.042**.

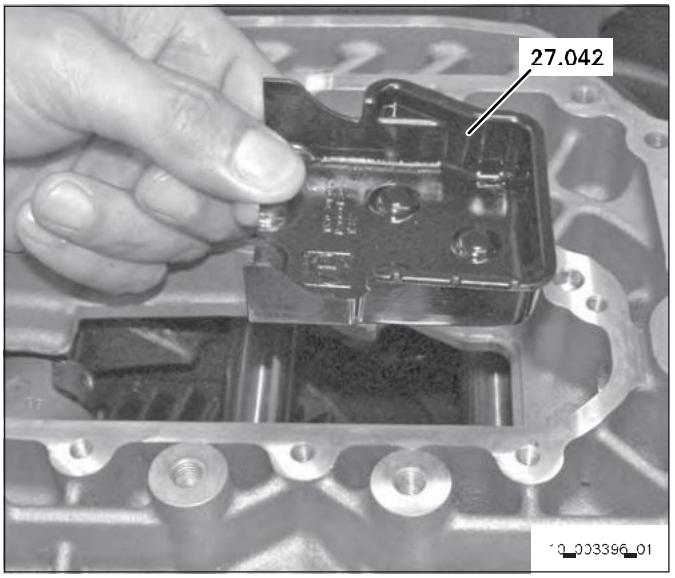

Model range 16

Removing the speed sensor

1 Remove hexalobular driving screw **71.033** from the speed sensor **71.031**.

2 Carefully pull out speed sensor.

3 Remove O-ring **(1)** from speed sensor.

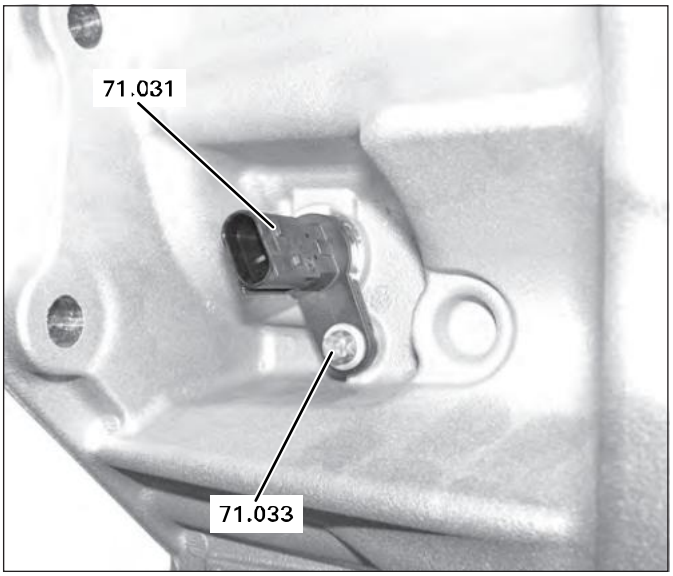

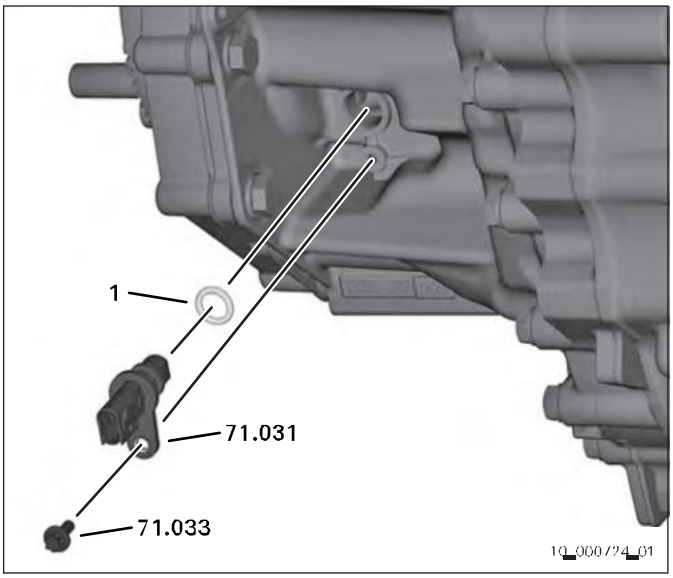

Impulse sensor for speedometer
Removing the impulse sensor

1 Unscrew the impulse sensor **31.341**.

Installing the impulse sensor

1 Depending on parts list [BoM]*
- Screw in impulse sensor **31.341** without using Loctite.
  Tightening torque: **45 Nm**

or

- Screw in screw plug with new sealing ring.
  Tightening torque: **35 Nm**

* Optional, impulse sensor or screw plug

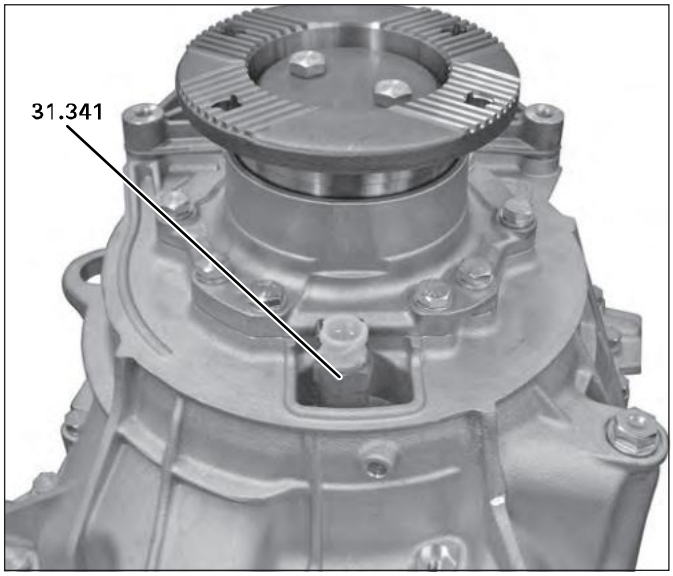

Basic transmission

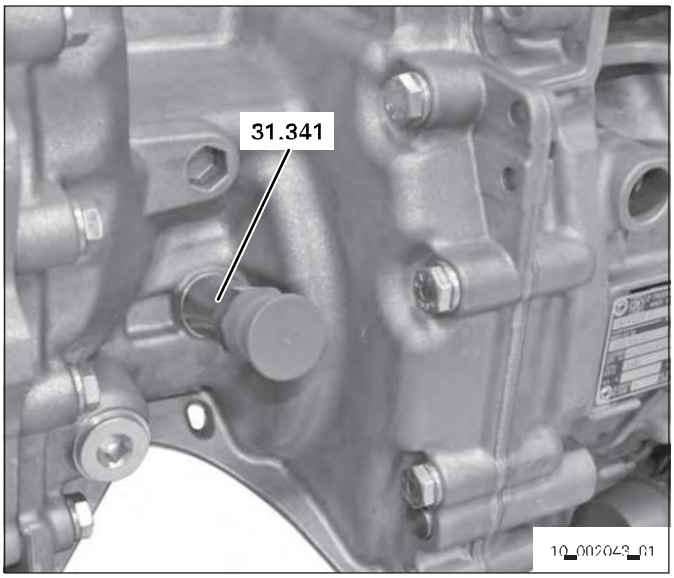

Transmissions with INTARDER

Removing the heat exchanger

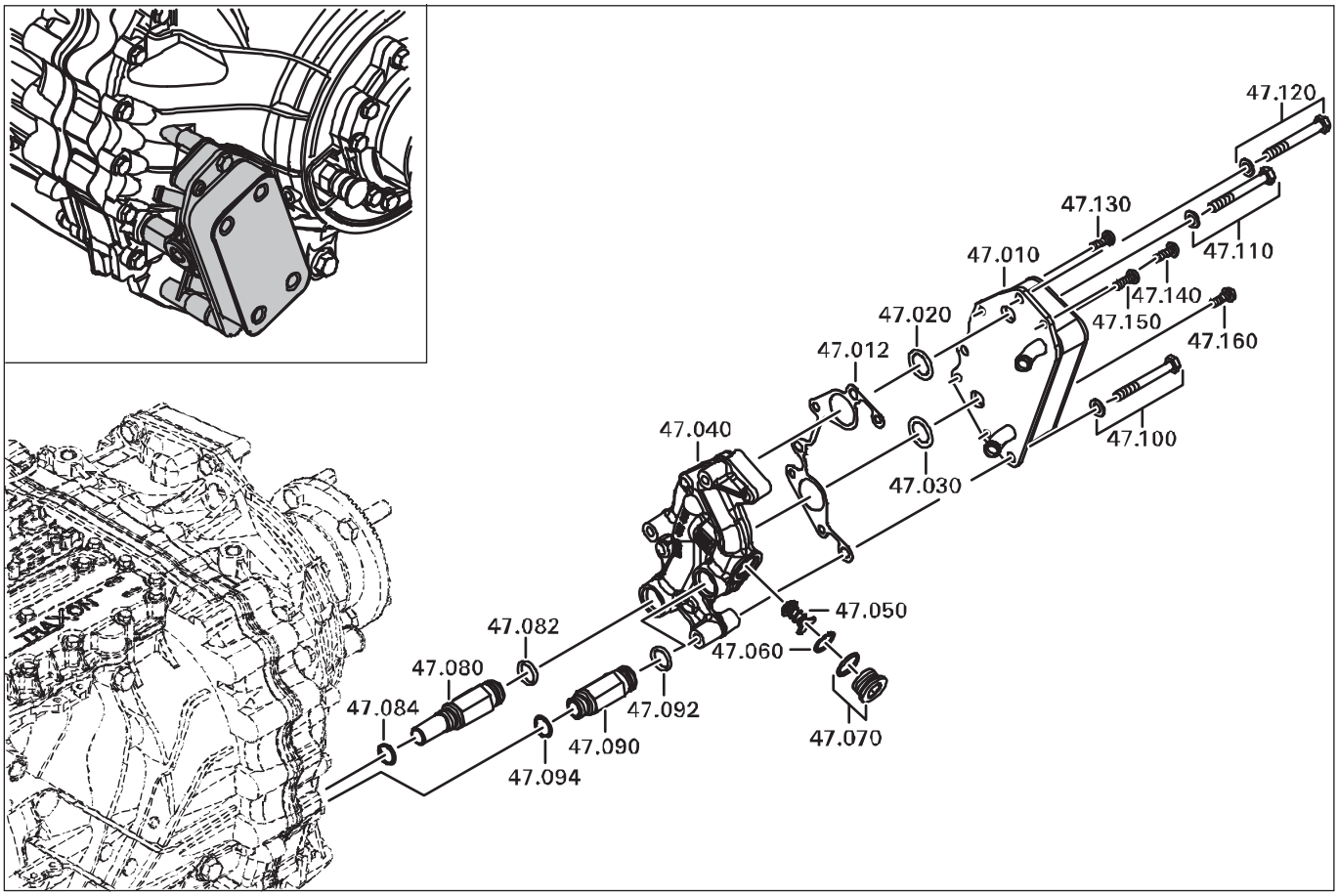

036617

Legend

47.010	Heat exchanger
47.012	Seal
47.020	O-ring
47.030	O-ring
47.040	Valve housing
47.050	Valve internal parts
47.060	Securing ring
47.070	Screw plug
47.080	Union screw
47.082	O-ring
47.084	O-ring
47.090	Union screw
47.092	O-ring
47.094	O-ring
47.100	Hexagon screw
47.110	Hexagon screw
47.120	Hexagon screw
47.130	Torx screw
47.140	Torx screw
47.150	Torx screw
47.160	Torx screw

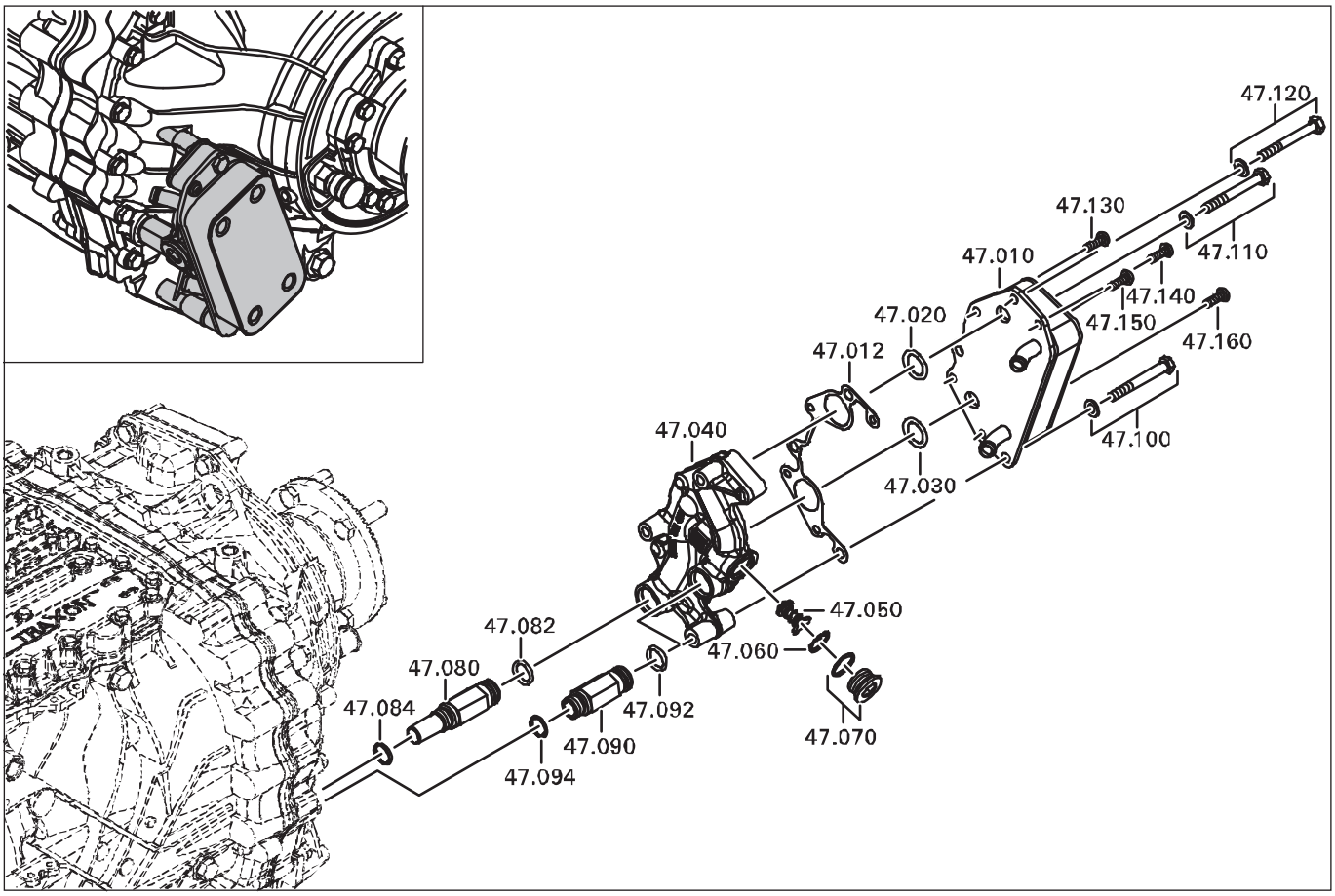

0366 7

Only carry out work step 1 and 2 when valve internal parts **47.050** are renewed.

1 Remove screw plug **47.070**.

2 Remove securing ring **47.060** and valve internal parts **47.050**.

3 Remove three hexagon screws with washers **47.100, 47.110, 47.120**.

4 Lift the heat exchanger unit using two pry bars where necessary.

5 Remove four torx screws **47.130, 47.140, 47.150,47.160** and remove heat exchanger **47.010** from valve housing **47.040**.

6 Remove O-rings **47.020, 47.030**.

7 Remove seal **47.012**.

8 Remove union screws **47.080, 47.090** and O-rings **47.082, 47.084, 47.092, 47.094**.

Removing the PTO cover

31.310 Adapter
31.430 Cover [PTO cover]
31.440 Seal
31.450 Hexagon screw **(1)**
31.460 Hexagon screw **(1)**
31.470 Hexagon screw **(1)**
31.480 Hexagon screw **(1)**

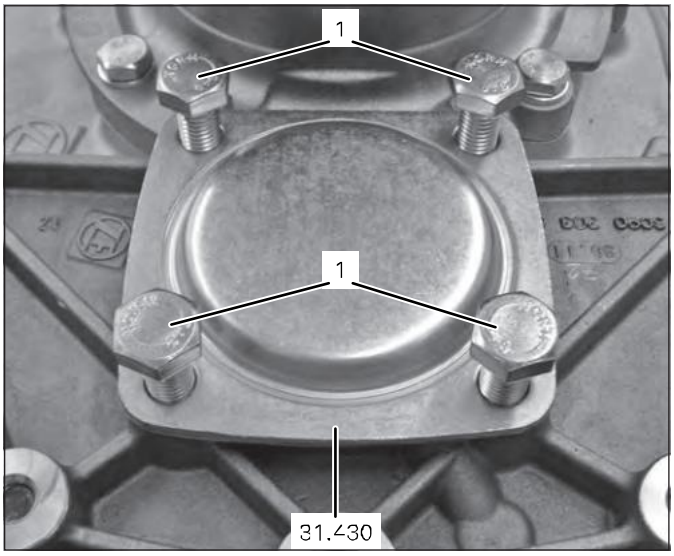

036026_1

1 Remove four M12 hexagon screws **(1)**.

2 Remove PTO cover **31.430** with seal **31.440**.

Installing the PTO cover

For the installation of a PTO, the respective separate installation instructions are binding.

1 Clean sealing faces on the adapter plate **31.310** and the PTO cover **31.430**.

2 Install PTO cover **31.430** with new seal **31.440**.

3 Secure PTO cover **31.430** with four M12 hexagon screws **(1)**.
M12 tightening torque: **79 Nm**

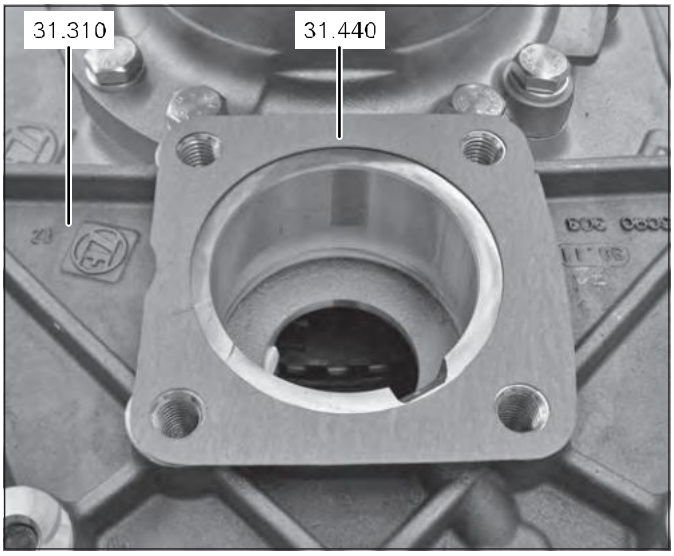

036026_1

Removing the adapter plate

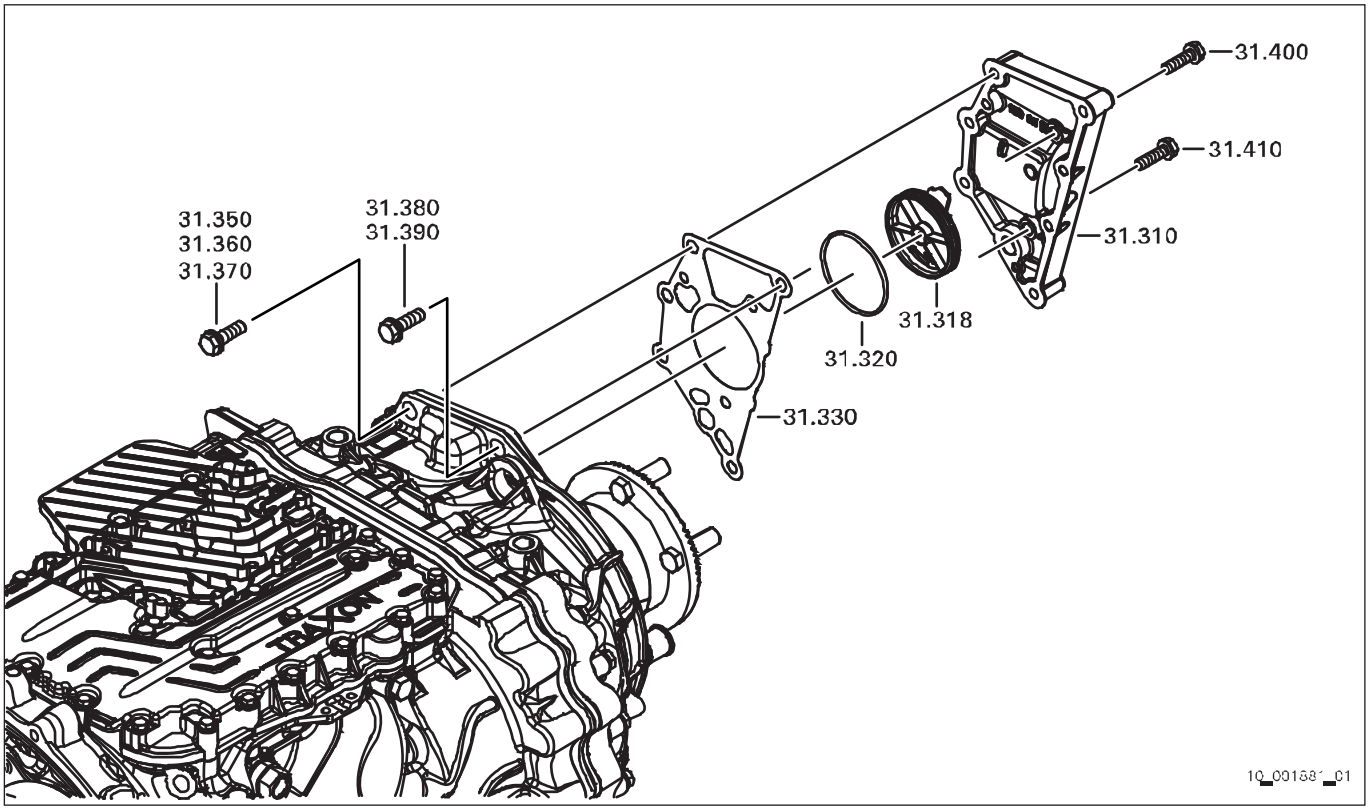

31.310 Cover [adapter plate]
31.318 Plug
31.320 O-ring
31.330 Flat seal
31.350 Screw with washer assembly **(1)**
31.360 Screw with washer assembly **(1)**
31.370 Screw with washer assembly **(1)**
31.380 Screw with washer assembly **(1)**
31.390 Screw with washer assembly **(1)**
31.400 Hexagon screw **(2)**
31.410 Hexagon screw **(2)**

1 Remove five M12 screws with washer assembly **(1)** from the adapter plate **31.310**.

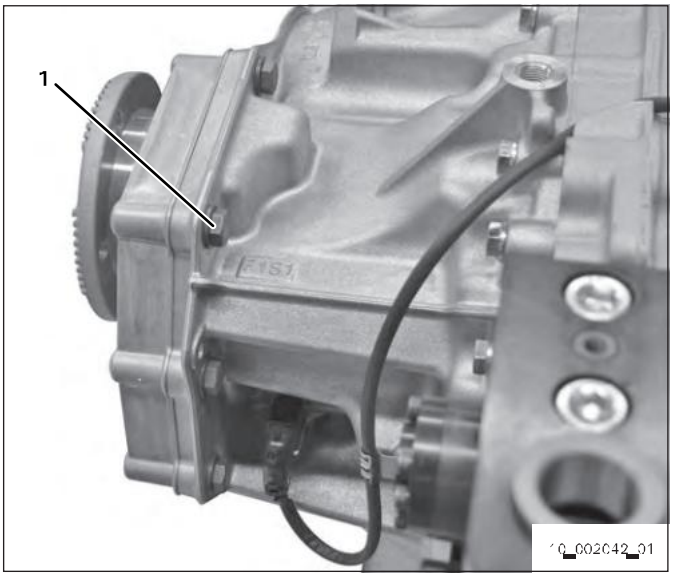

2 Remove two M10 hexagon screws **(2)** and take off adapter plate **31.310**.

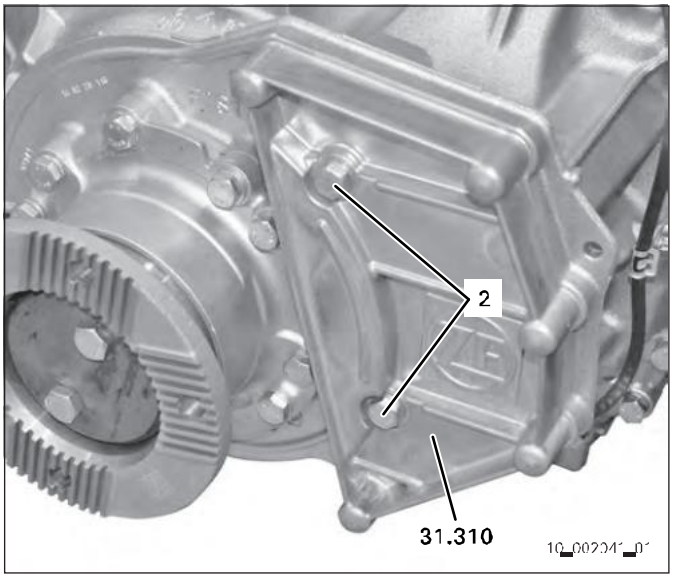

3 Remove plug **31.318**.

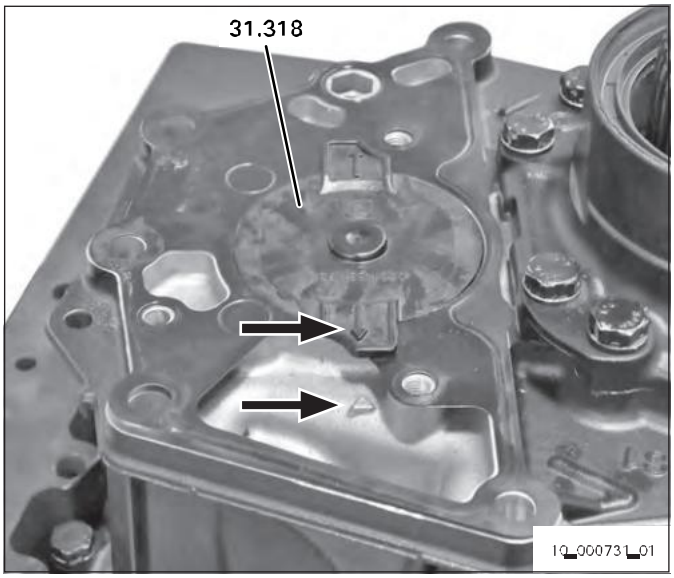

4 Remove O-ring **31.320** from plug **31.318**.

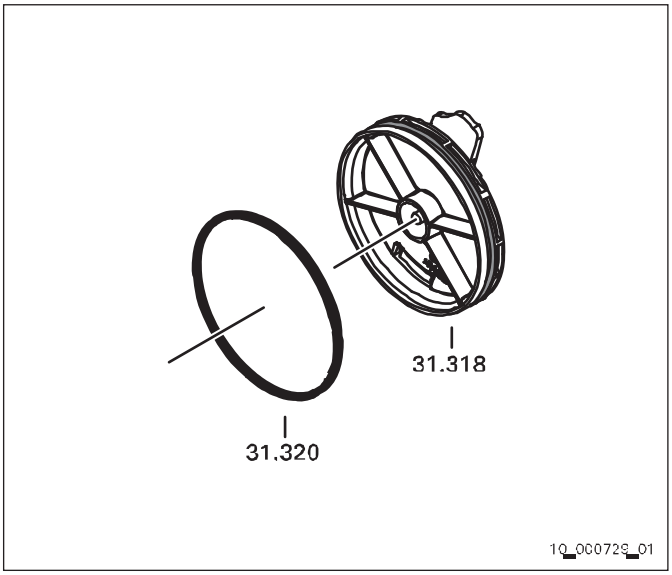

5 Remove flat seal **31.330**.

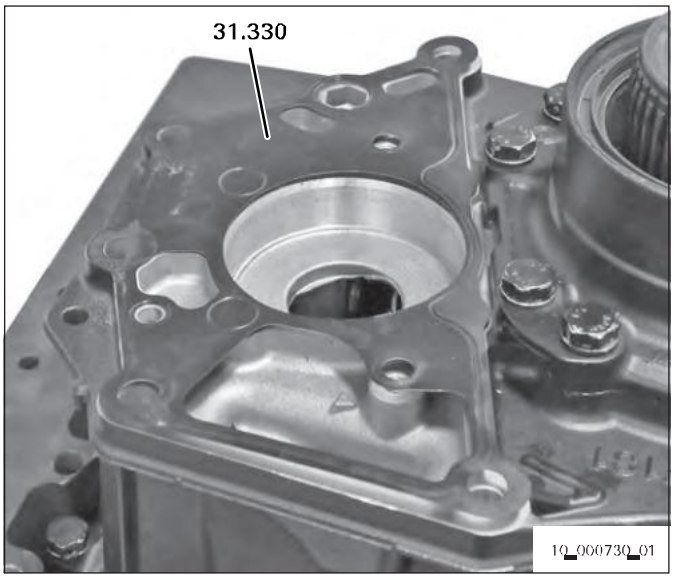

6 Clean sealing faces on the transmission housing and the adapter plate.

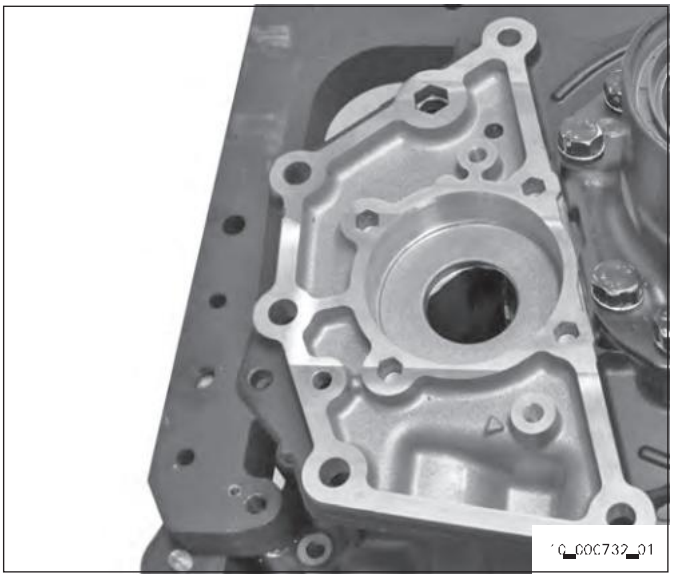

Compressed-air connection

Removing the connecting nozzle

1 Unscrew connecting nozzle **59.010**.

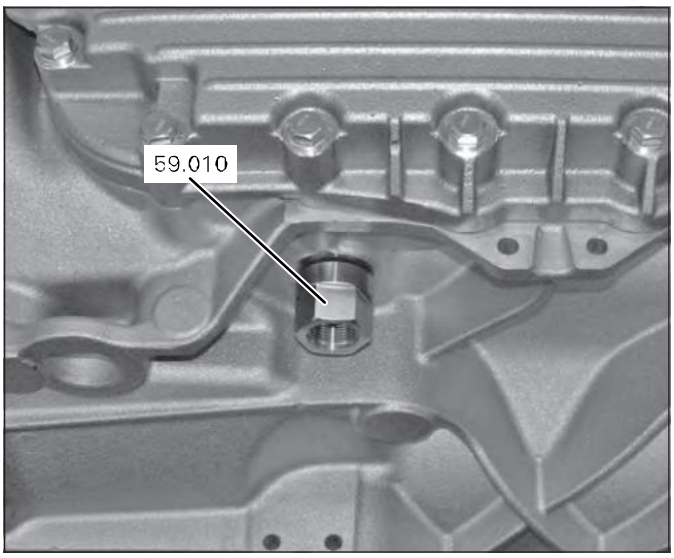

035616_1

2 Push out screen insert **59.020** in direction of arrow and clean.

3 Remove O-rings **59.030, 59.040** from connecting nozzle **59.010**.

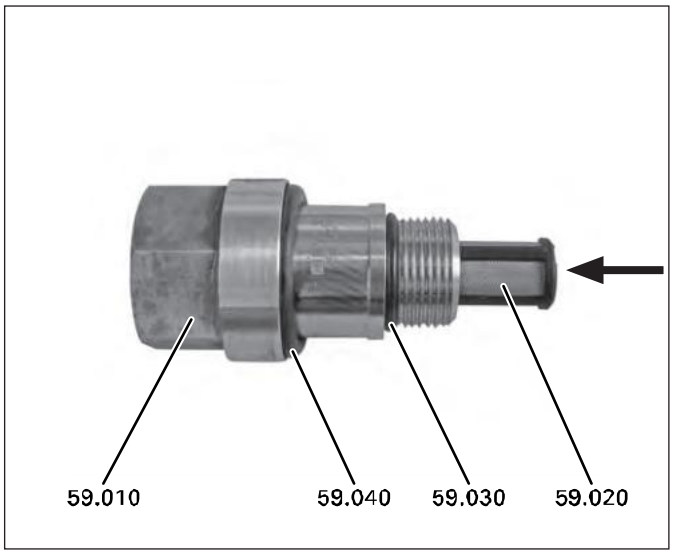

035617_1

Installing the connecting nozzle

1 Insert screen insert **59.020** in direction of arrow.

2 Lightly grease new O-rings **59.030, 59.040** and install on the connecting nozzle **59.010**.

3 Screw connecting nozzle **59.010** into the housing.
Tightening torque: **50 Nm**

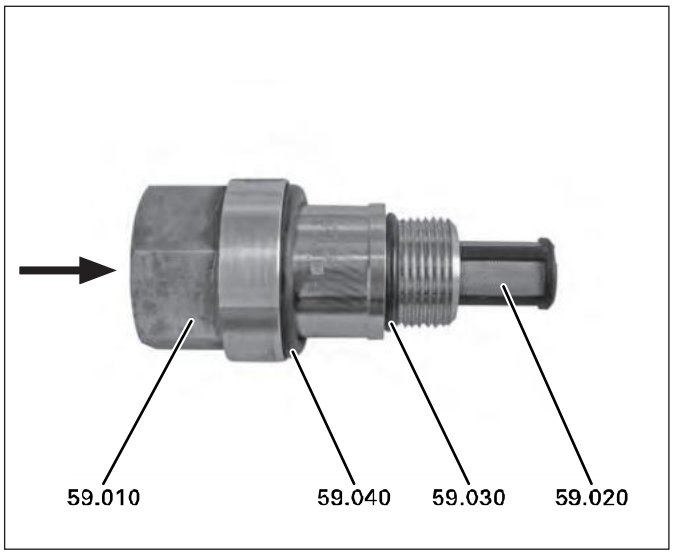

035617_2

Removing the ConAct

68.010 ConAct (clutch actuation unit)
68.020 Sealing ring
68.030 Sensor (2)
68.032 Hexagon screw (3)
68.034 Hexagon screw (3)
68.040 Cap screw (1)
68.050 Cap screw (1)
68.060 Housing cover
68.100 Torx screw (4)
68.110 Torx screw (4)
68.120 Torx screw (4)
68.130 Torx screw (4)

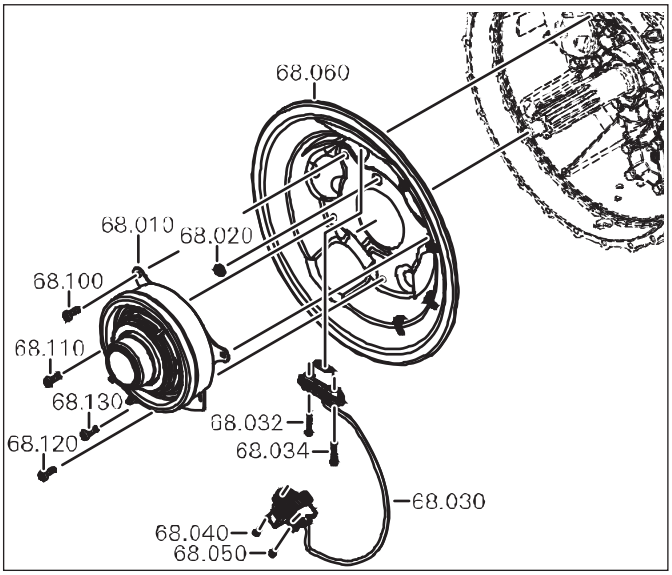

03ba88

Requirement:
- ConAct is bled. In case of doubt, bleed the ConAct once again *(see Chapter Bleeding the ConAct)*.

1 Remove cable **(11)** from the cable clips **(12)**.

2 Remove two screws **(3)** from the sensor connector **(10)**.

3 Pull out sensor connector **(10)**.

4 Remove four M8 torx screws **(4)** from the ConAct **68.010**.

5 Lift off the ConAct **68.010**.

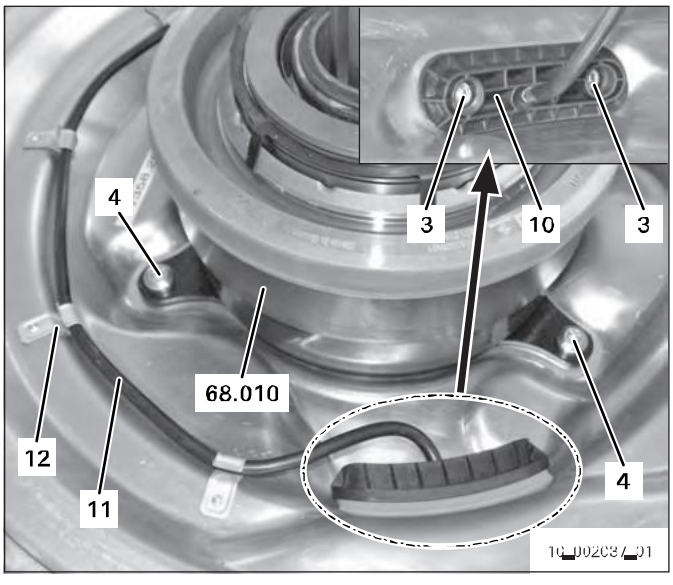

1358_090
2017-06

6 Remove sealing ring **68.020**.

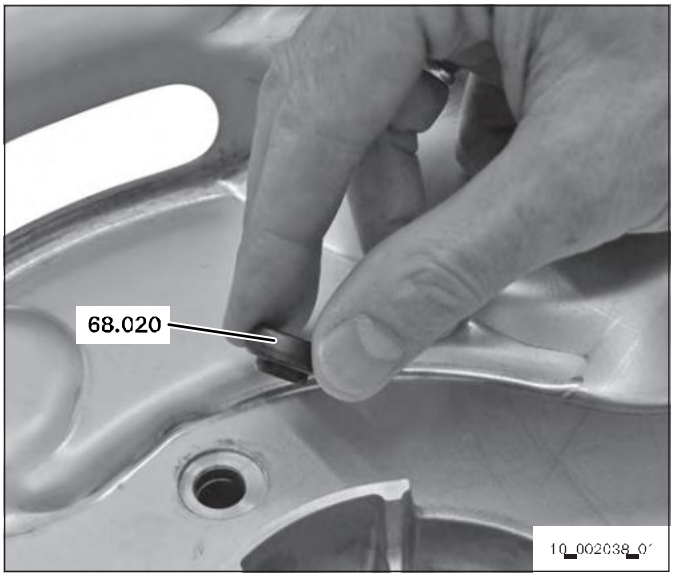

7 Remove housing cover **68.060**.

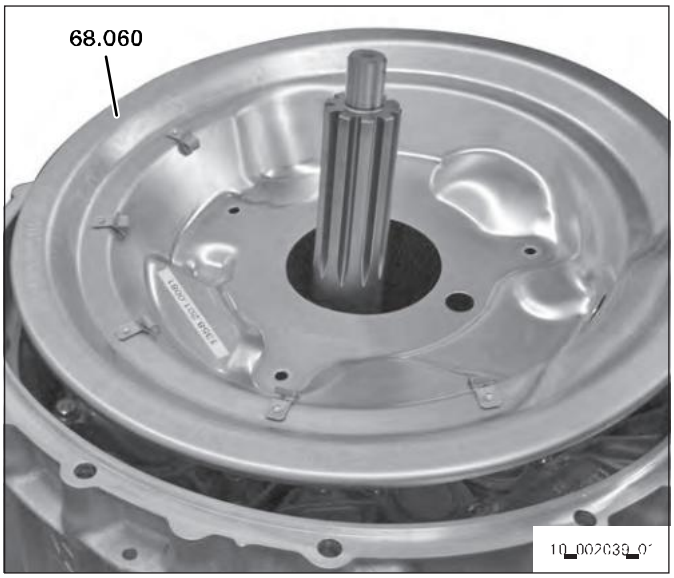

8 Only remove the sensor from the ConAct in the event of repair.

When removing the cap screws **(1)**, make sure that the integrated nuts do not damage the plastic holder.

Remove two cap screws **(1)** and take off sensor **(2)**.

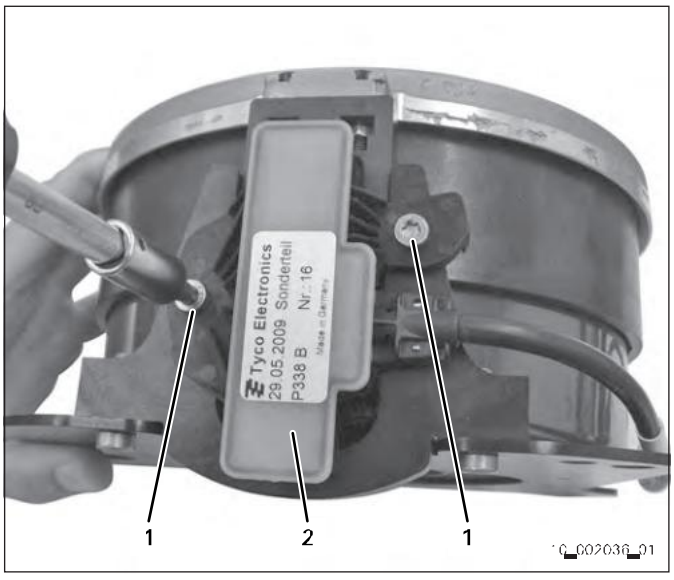

Do not remove the two screws **(1)** from the sensor.

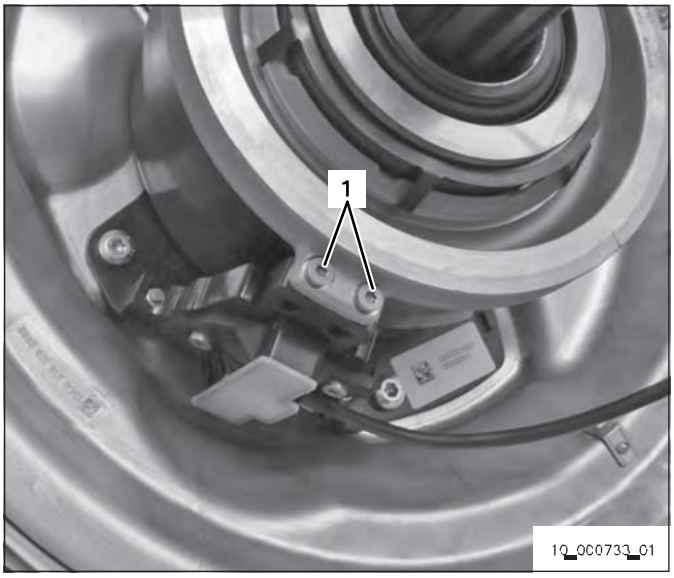

Rotating the transmission without assembly stand

1 For versions with INTARDER, remove INTARDER first *(refer to Chapter Removing the INTARDER)*.

2 Place a suitably high assembly support (e.g., two squared timbers) on firm, level ground to ensure that the input shaft is not in contact with the workshop floor.

NOTICE

Damage due to housing failure.

⇨ Do not use the cast-on lug to lift the complete ZF product.

⇨ Screw two adapters onto the ZF product.

3 Screw two adapters **1T66.160.650 (M16x1.5)** into the transmission housing and hook in chain sling **1T66.160.432**.

4 Lift transmission with a hoist.

5 Place transmission with the clutch bell housing on the assembly support (e. g., two squared timbers).

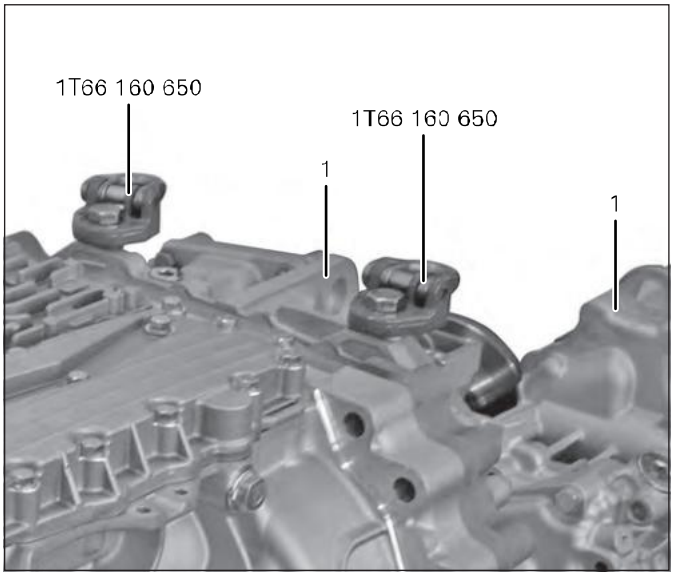

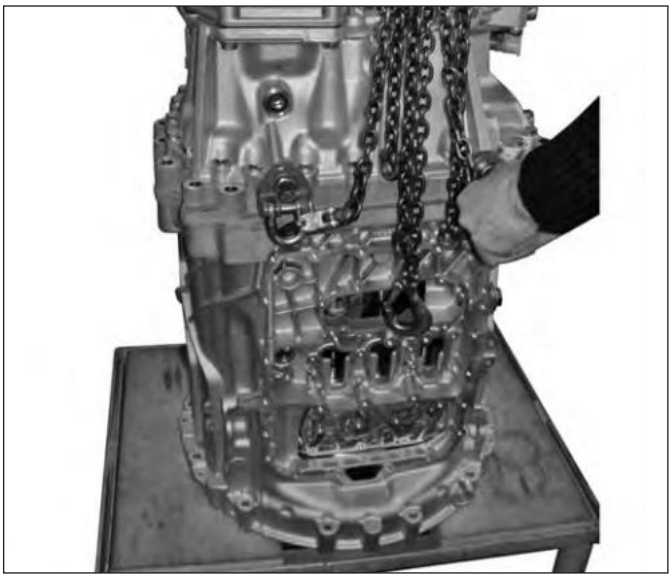

Removing the output flange

TRAXON without INTARDER

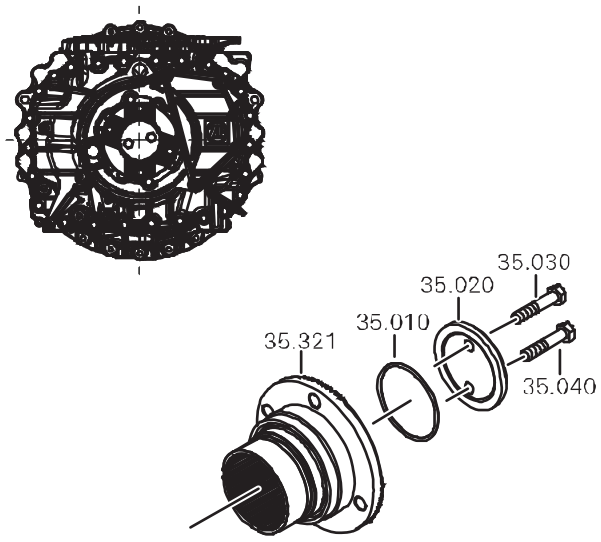

TRAXON with INTARDER

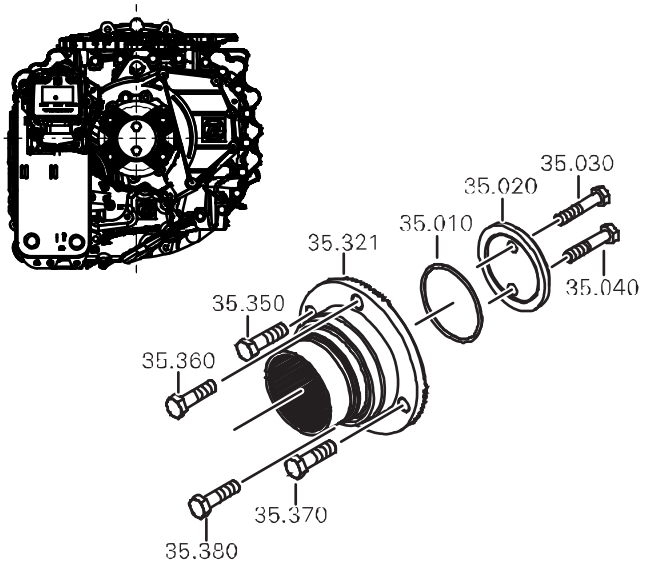

035455, 035464

TRAXON without INTARDER

35.010 O-ring **(3)**
35.020 Washer **(2)**
35.030 Hexagon screw **(1)**
35.040 Hexagon screw **(1)**
35.321 Output flange **(4)**

TRAXON with INTARDER

35.010 O-ring **(3)**
35.020 Washer **(2)**
35.030 Hexagon screw **(1)**
35.040 Hexagon screw **(1)**
35.321 Output flange **(4)**
35.350 Hexagon screw **(5)**
35.360 Hexagon screw **(5)**
35.370 Hexagon screw **(5)**
35.380 Hexagon screw **(5)**

1 Remove two hexagon screws **(1)** and take off washer **(2)**.

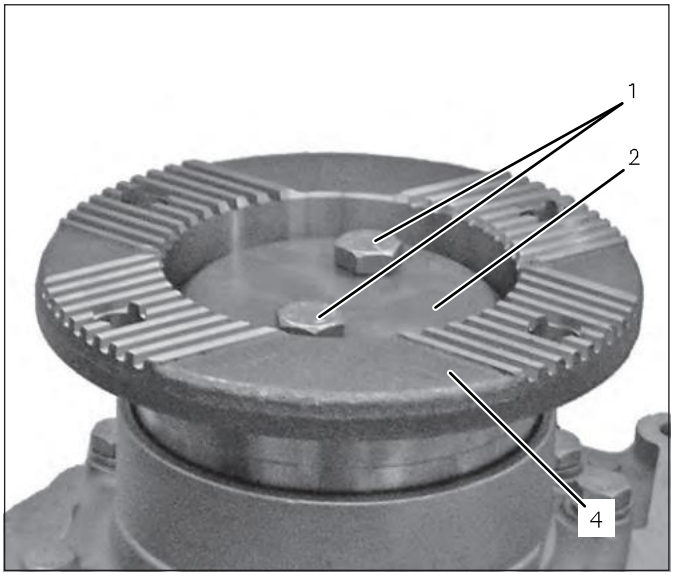

2 Pull off output flange **(4)** using a standard three-armed extractor **(7)** and remove O-ring **(3)**.

The shaft may not be damaged during the pull-off process, therefore use a thrust piece **(8)**.

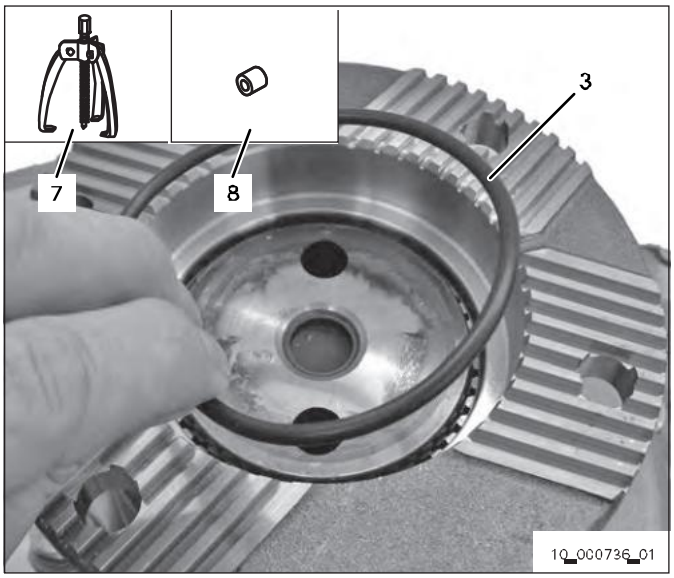

3 When dealing with the version with INTARDER, remove the hexagon screws **(5)** from the output flange.

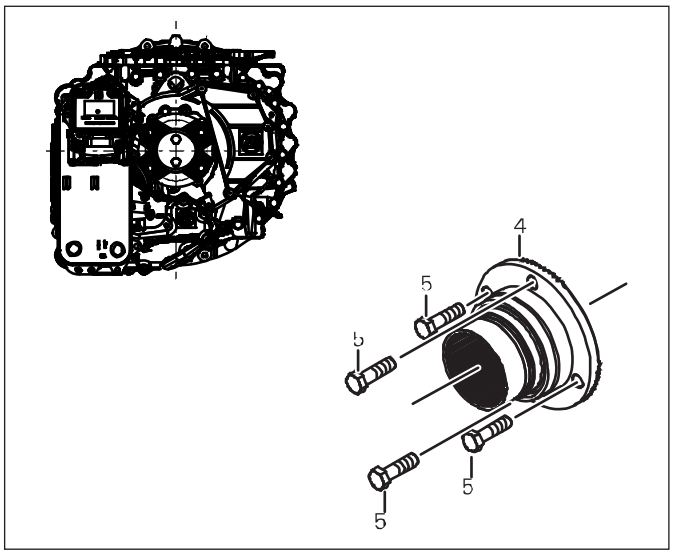

TRAXON with INTARDER 03516

Removing the output cover

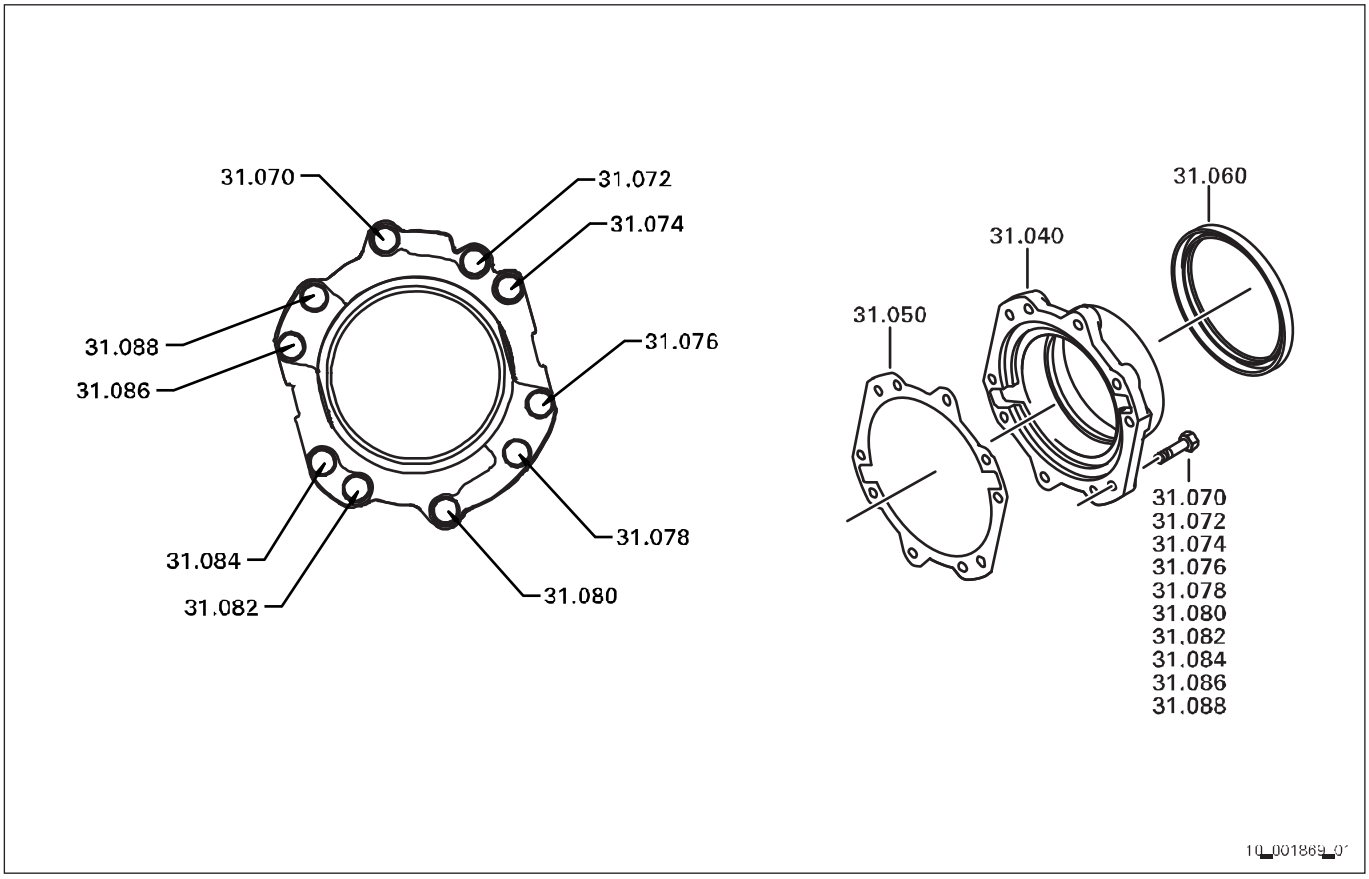

31.040 Cover **(2)** [output cover]
31.050 Seal **(4)**
31.060 Shaft sealing ring **(3)**
31.070 Hexagon screw **(1)**
31.072 Hexagon screw **(1)**
31.074 Hexagon screw **(1)**
31.076 Hexagon screw **(1)**
31.078 Hexagon screw **(1)**
31.080 Hexagon screw **(1)**
31.082 Hexagon screw **(1)**
31.084 Hexagon screw **(1)**
31.086 Hexagon screw **(1)**
31.088 Hexagon screw **(1)**

For the version with ZF-INTARDER, no output cover is used.

1 Remove ten hexagon screws **(1)** and lift off output cover **(2)**.

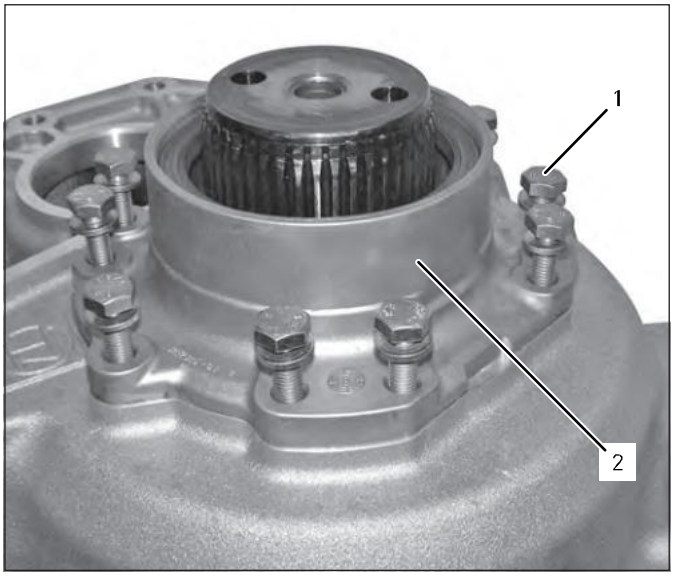

2 Remove seal **(4)**.

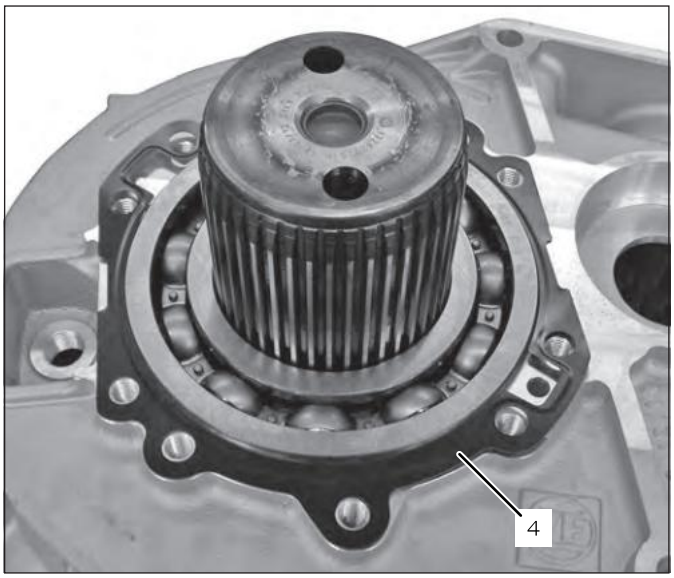

3 Use a suitable tool to remove shaft sealing ring **(3)**; do not damage output cover in the process.

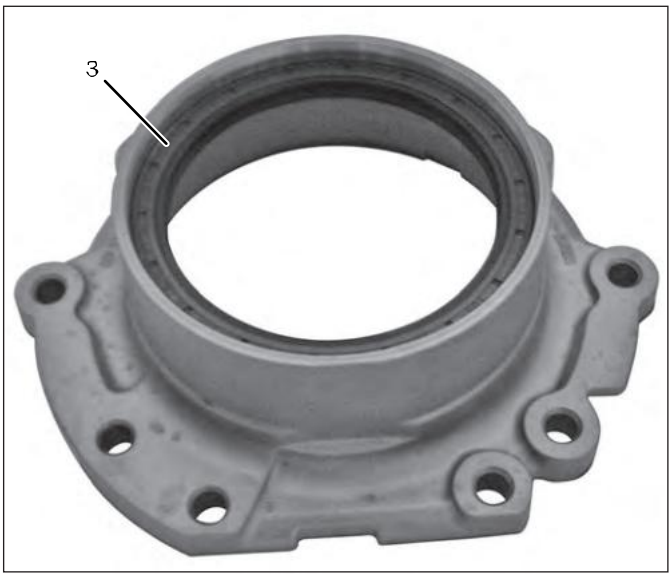

Removing the steering pump

1 Remove retaining bolts on the steering pump.

2 Lift off steering pump **(1)** and remove from the pump housing **(2)**.

3 Remove O-ring **(3)**.

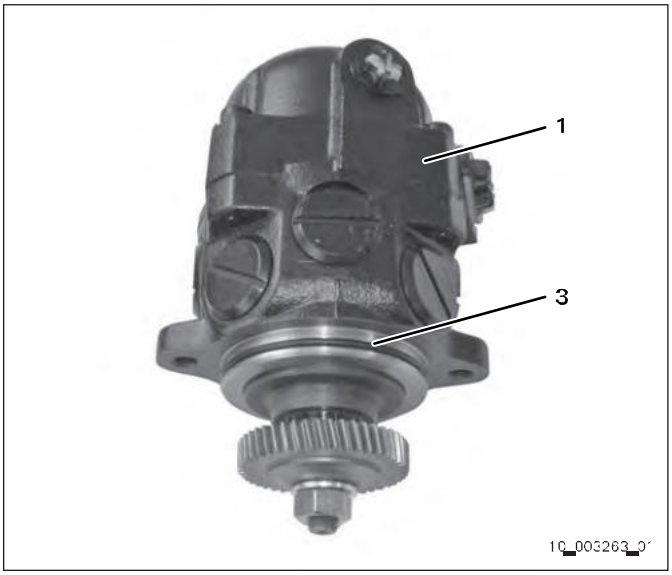

4 Remove pump housing **(2)**.
Remove four screws and two nuts.
The pump housing is still supported by two cylindrical pins.

5 Carefully lift off pump housing **(2)**.

6 Remove shaft **(4)**.

7 Remove O-ring **(5)** from the shaft.

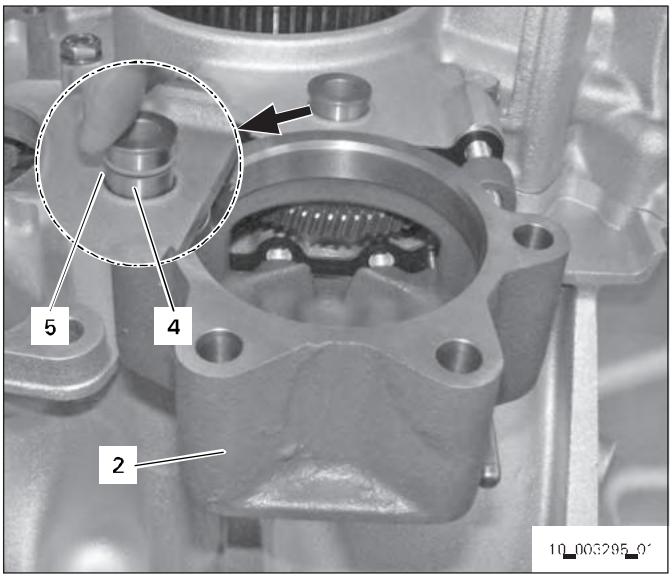

8 Remove gear **(6)** from INTARDER housing.

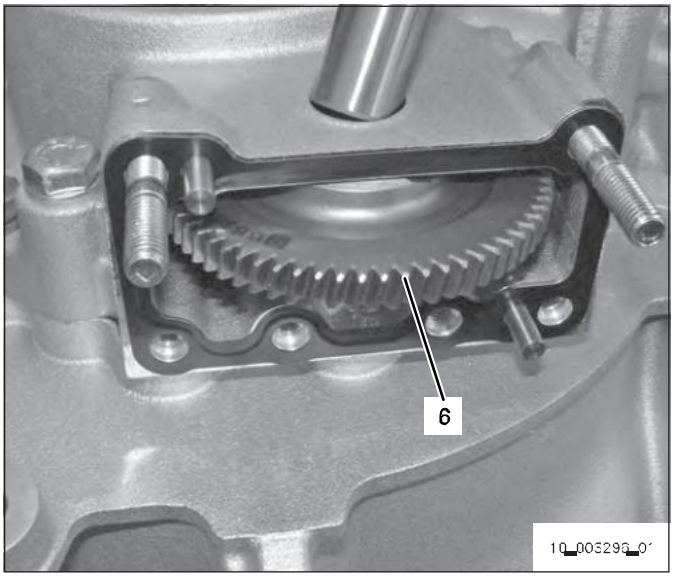

9 Remove seal (7).

Only remove studs and cylindrical pins if they are damaged.

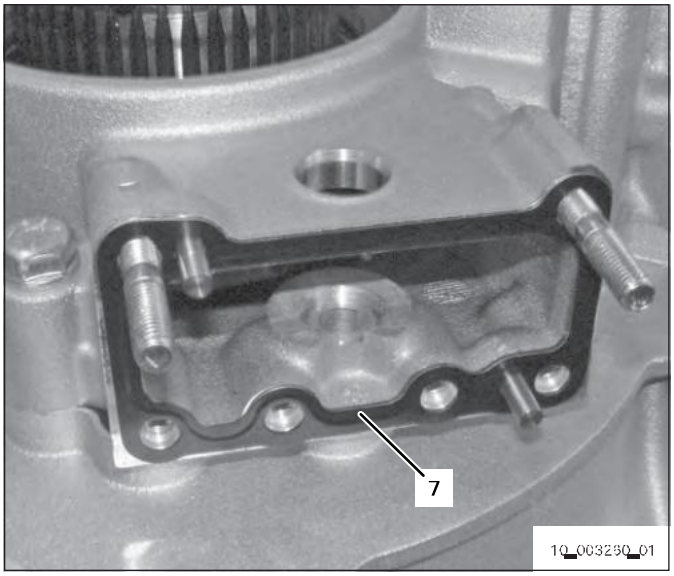

Removing the INTARDER

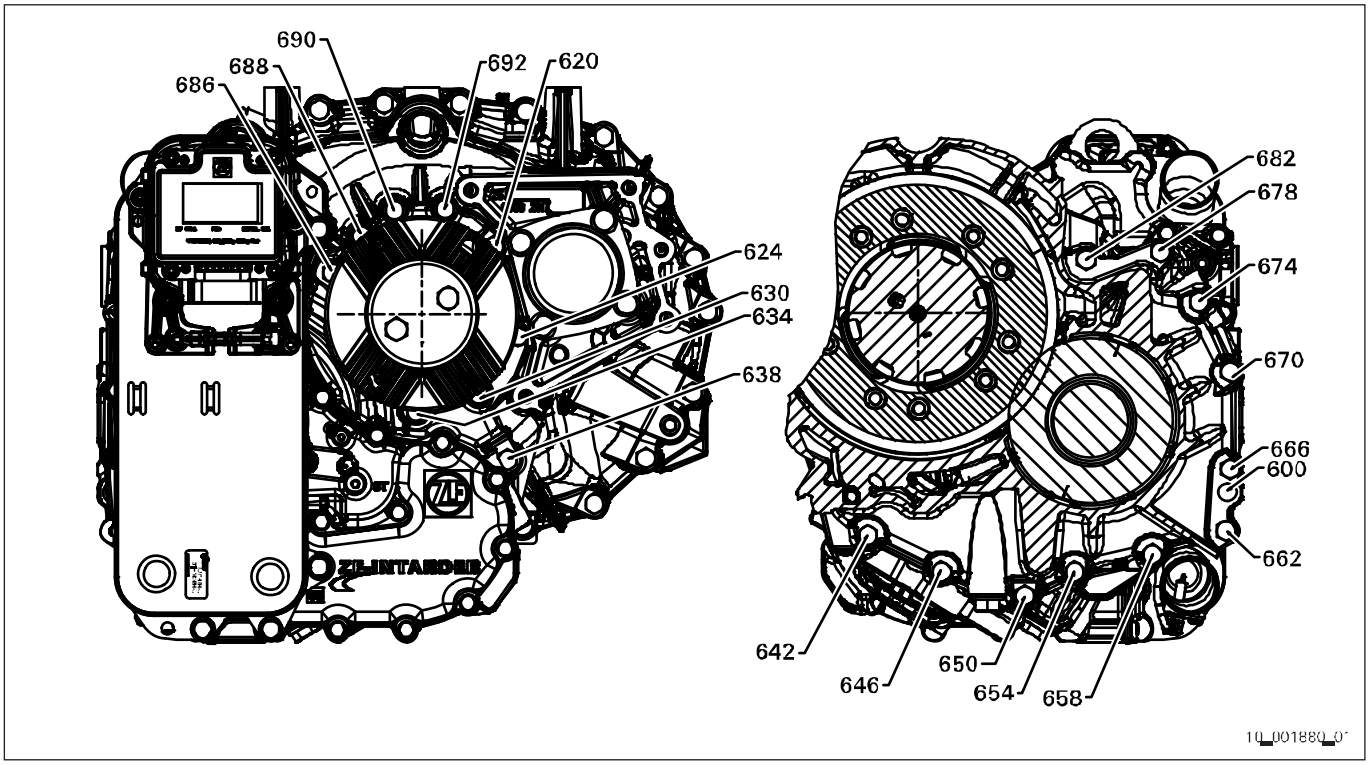

600	Cylindrical pin
620	Hexagon screw **(1)**
624	Hexagon screw **(1)**
630	Hexagon screw **(2)**
634	Hexagon screw **(2)**
638	Hexagon screw **(2)**
642	Hexagon screw **(2)**
646	Hexagon screw **(2)**
650	Hexagon screw **(2)**
654	Hexagon screw **(2)**
658	Hexagon screw **(2)**
662	Hexagon screw **(2)**
666	Hexagon screw **(2)**
670	Hexagon screw **(2)**
674	Hexagon screw **(2)**
678	Hexagon screw **(2)**
682	Hexagon screw **(2)**
686	Hexagon screw **(2)**
688	Hexagon screw **(2)**
690	Hexagon screw **(2)**
692	Hexagon screw **(2)**

M10x40 hexagon screw **(1)**
M10x60 hexagon screw **(2)**

If a PTO is installed, remove it first, then the INTARDER.

1

When lifting off the INTARDER, the impulse sensor might be damaged, thus remove the latter first.

Remove impulse sensor **(3)**.

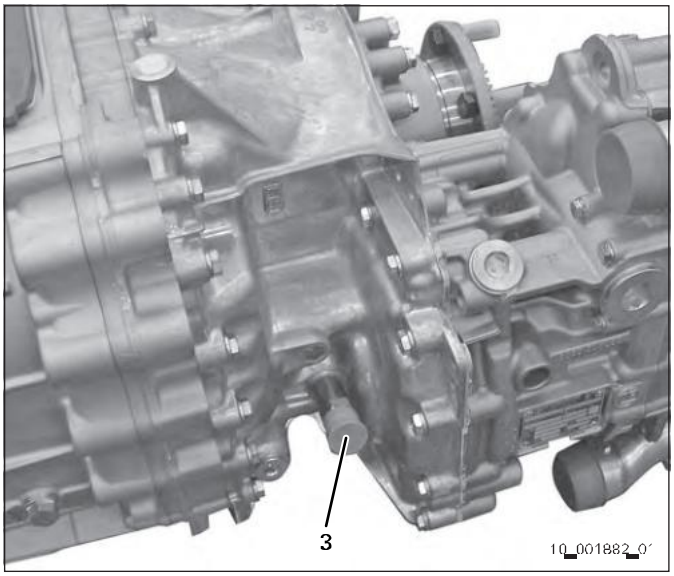

2 Remove cylindrical pin **(600)**, e. g. by using a commercially available slide hammer.

3 Remove 20 screws **(1, 2)**.

For additional information, refer to Repair Instructions 6093.751.101 INTARDER, 3rd Generation.

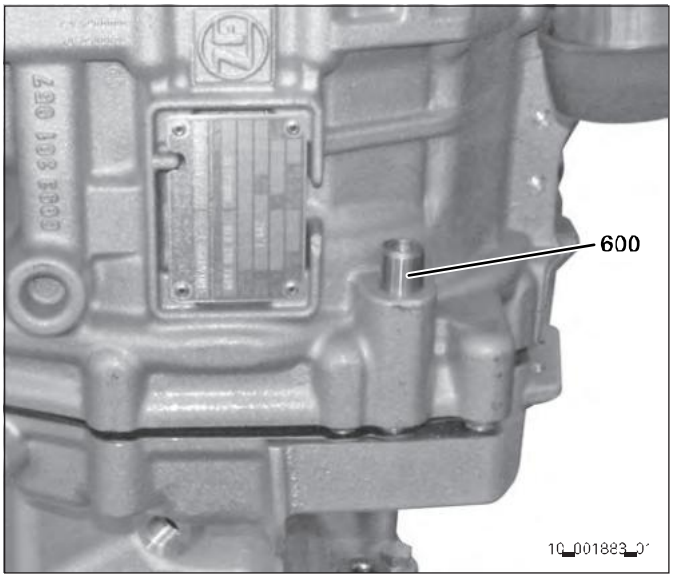

4 Lift off the INTARDER housing with a hoist.

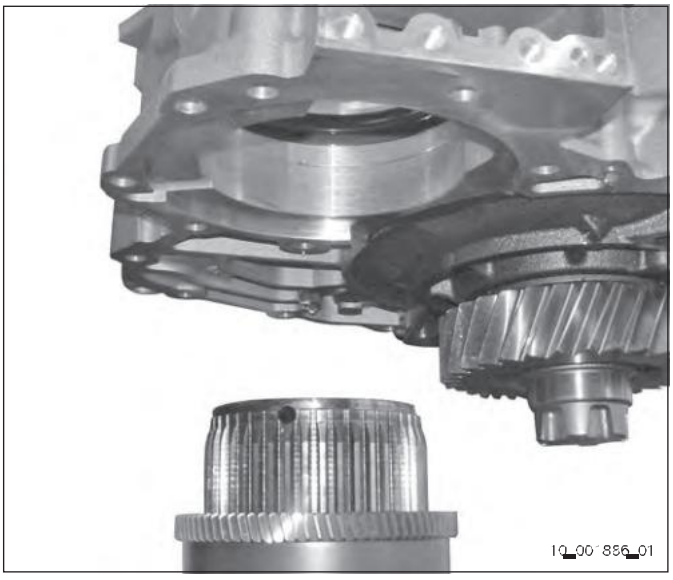

5 Remove input gear for steering pump and washer.

6 Remove seal.

The input gear and the washer are only assembled together with a steering pump.

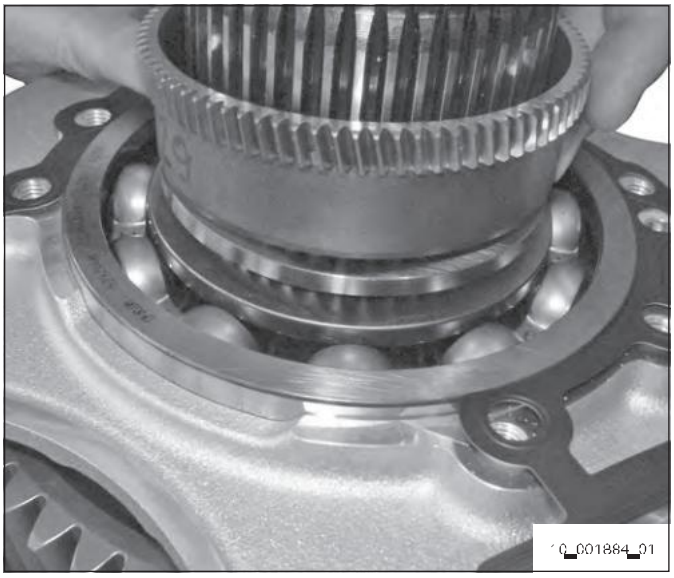

Removing the transmission housing

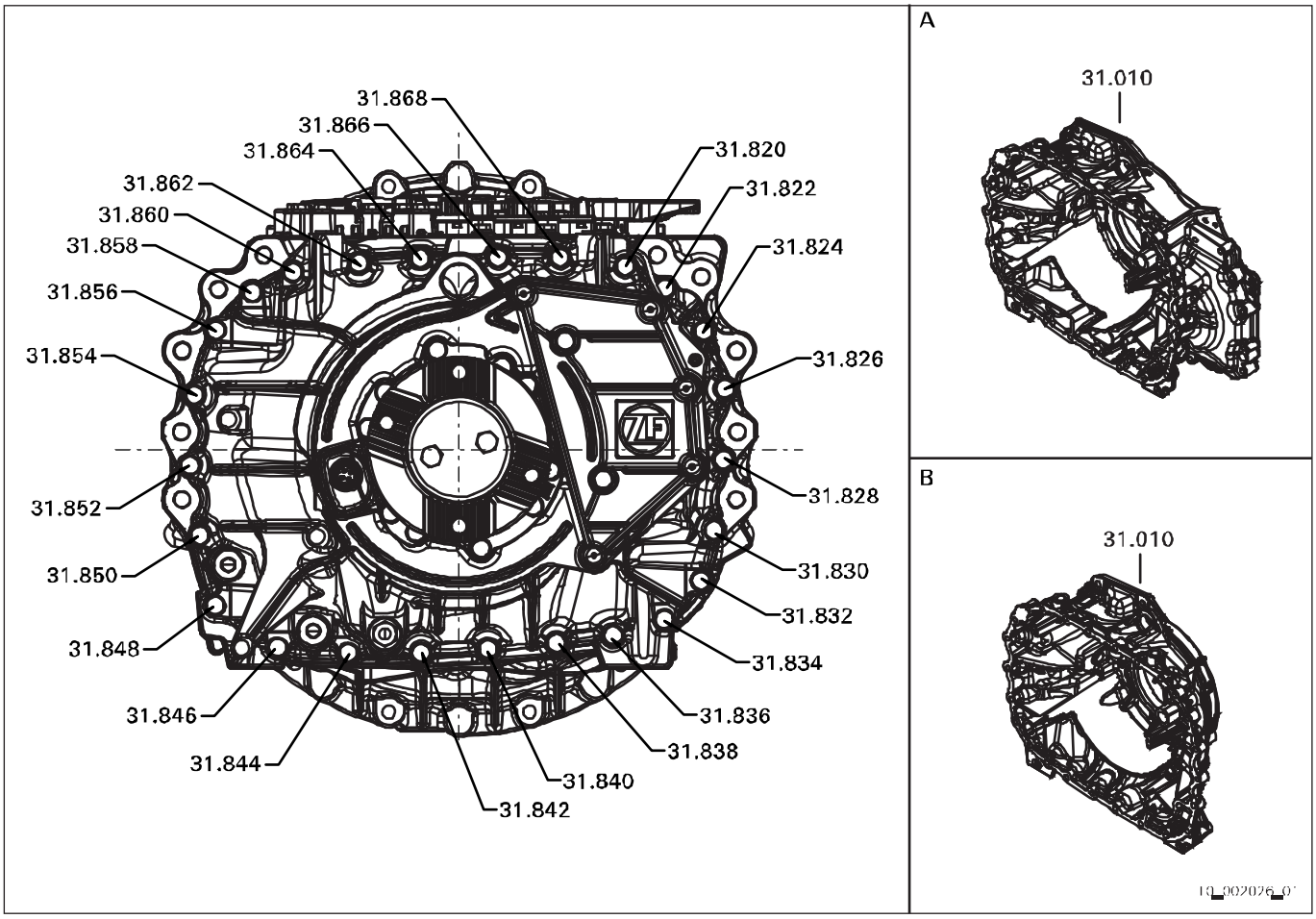

31.010	Transmission housing	31.844	Hexagon screw **(1)**
31.820	Hexagon screw **(1)**	31.846	Hexagon screw **(1)**
31.822	Hexagon screw **(1)**	31.848	Hexagon screw **(1)**
31.824	Hexagon screw **(1)**	31.850	Hexagon screw **(1)**
31.826	Hexagon screw **(1)**	31.852	Hexagon screw **(1)**
31.828	Hexagon screw **(1)**	31.854	Hexagon screw **(1)**
31.830	Hexagon screw **(1)**	31.856	Hexagon screw **(1)**
31.832	Hexagon screw **(1)**	31.858	Hexagon screw **(1)**
31.834	Hexagon screw **(1)**	31.860	Hexagon screw **(1)**
31.836	Hexagon screw **(1)**	31.862	Hexagon screw **(1)**
31.838	Hexagon screw **(1)**	31.864	Hexagon screw **(1)**
31.840	Hexagon screw **(1)**	31.866	Hexagon screw **(1)**
31.842	Hexagon screw **(1)**	31.868	Hexagon screw **(1)**

A: Version with INTARDER

B: Version without INTARDER

Version: Transmission with INTARDER

If the planet carrier is disassembled, start with work step 5. *Refer to transmission version without INTARDER*

Removing the transmission housing

1 Remove 25 hexagon screws **(1)** at the transmission housing **31.010**.

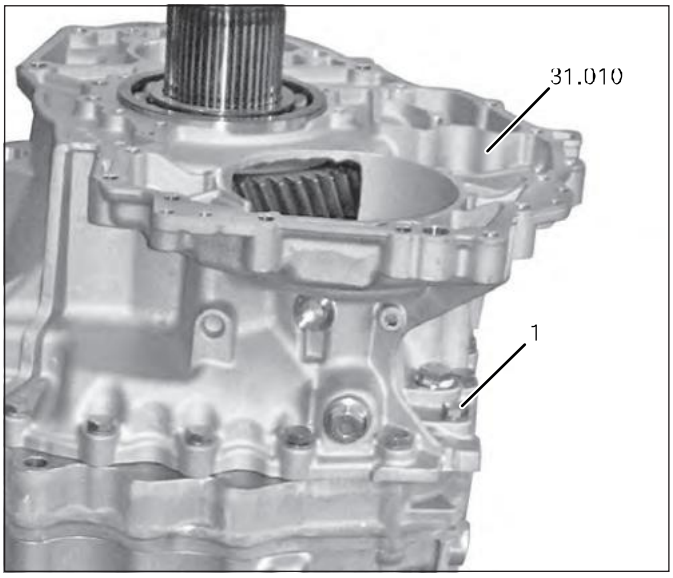

03586_1

2

NOTICE

Damage due to housing failure.

⇨ Risk of housing fracture due to canting.

⇨ Lift transmission housing evenly.

If required, use two pry bars to carefully lift the transmission housing off the basic transmission.

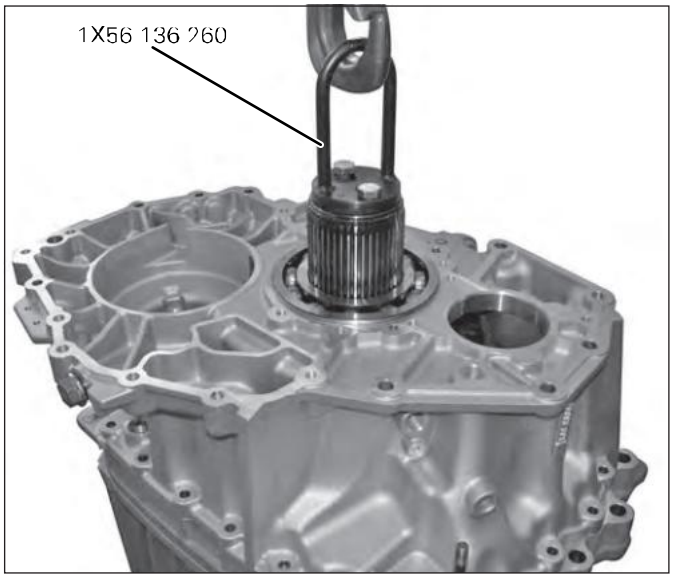

035869_1

3 Attach lifting device **1X56.136.260** at the planet carrier using two screws.

4 Use a hoist to carefully lift off the transmission housing.

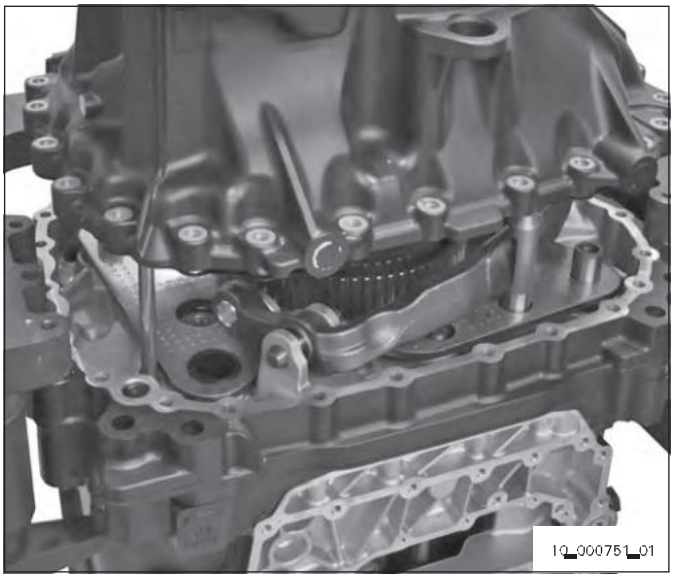

1358_130
2017-03

Version: Transmissions without INTARDER

Completely removing the transmission housing as assembly

If the planet carrier is disassembled, start with work step 5.

1 Remove 25 hexagon screws **(1)** at the transmission housing **31.010**.

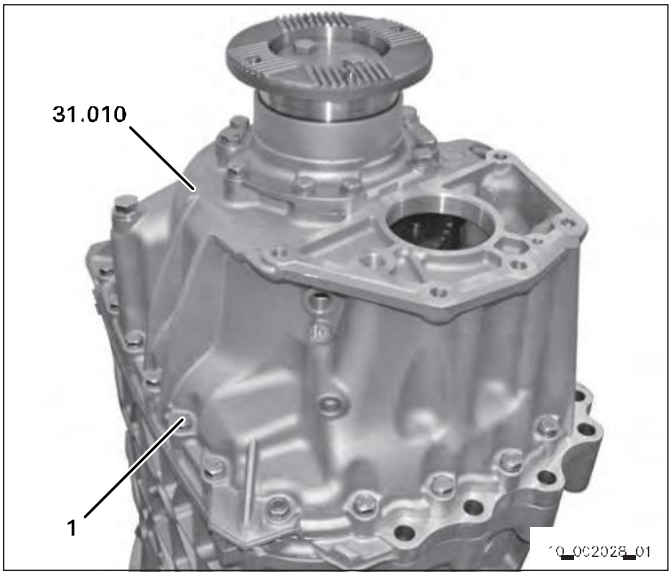

2

NOTICE

Damage due to housing failure.
⇨ Risk of housing fracture due to canting.
⇨ Lift transmission housing evenly.

If required, use two pry bars to lift the transmission housing off the basic transmission.

3 Attach lifting device **1T66.153.417** at the output flange or attach lifting device **1X56.136.260** at the planet carrier using two screws.

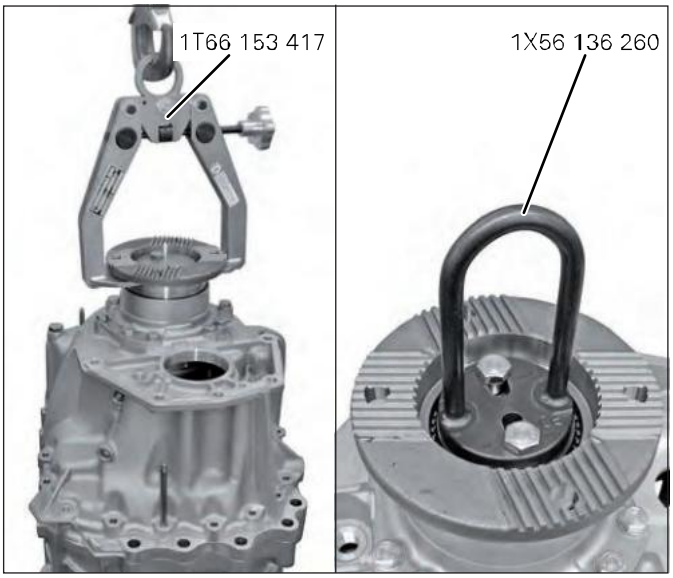

In case the lifting device **1X56.136.260** is used, the washer on the output flange has to be removed first.

4 Use a hoist to carefully lift off the transmission housing.

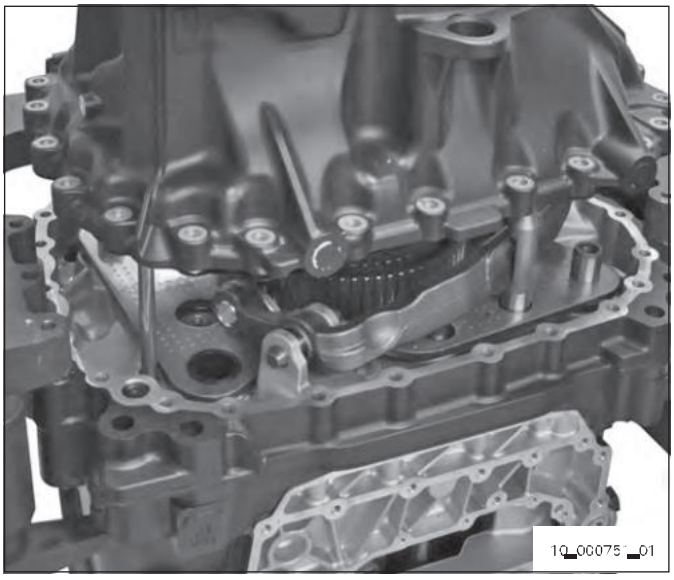

5 Remove output flange and output cover *(refer to corresponding chapters)*.

6 Put thrust piece **(2)** between extractor **1X56.138.295** and planet carrier.

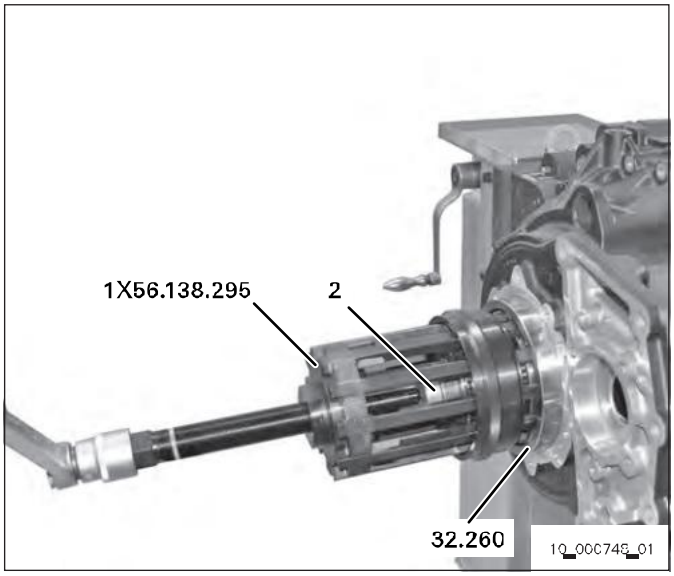

The extractor arms engage with the ball bearing.

Pull off ball bearing **32.260** using the extractor **1X56.138.295**. Do not use an impact wrench.

7 Remove 25 hexagon screws **(1)** at the transmission housing **31.010**.

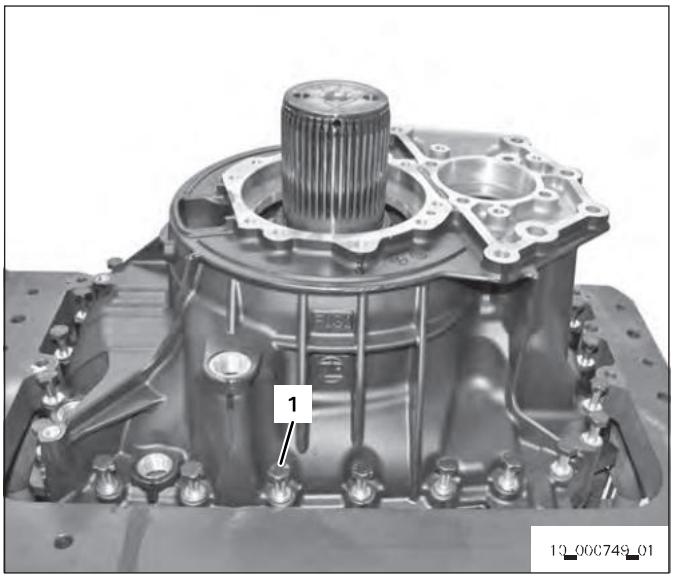

8 Lift off transmission housing **31.010**.

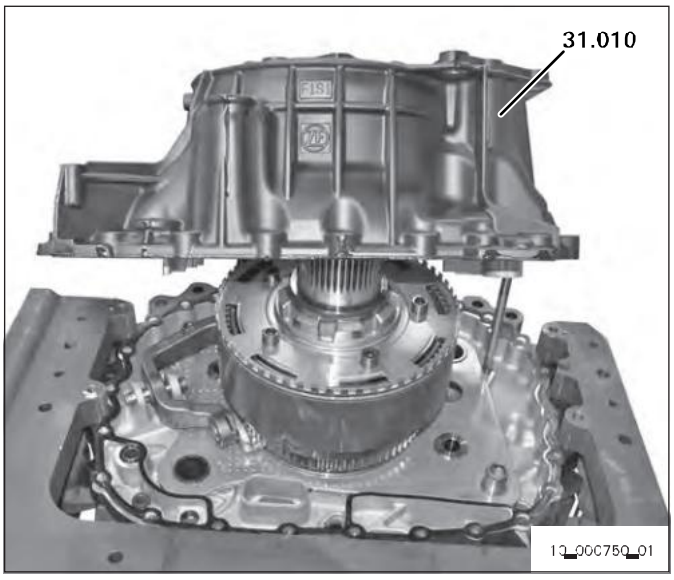

9 Attach lifting device **1X56.136.260** at the planet carrier using two screws.

10 Use a hoist to lift off planet carrier.

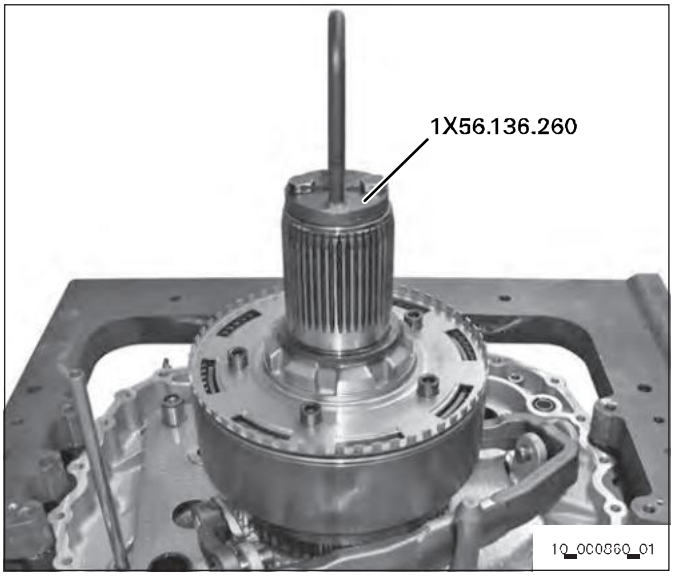

Disassembling the planet carrier

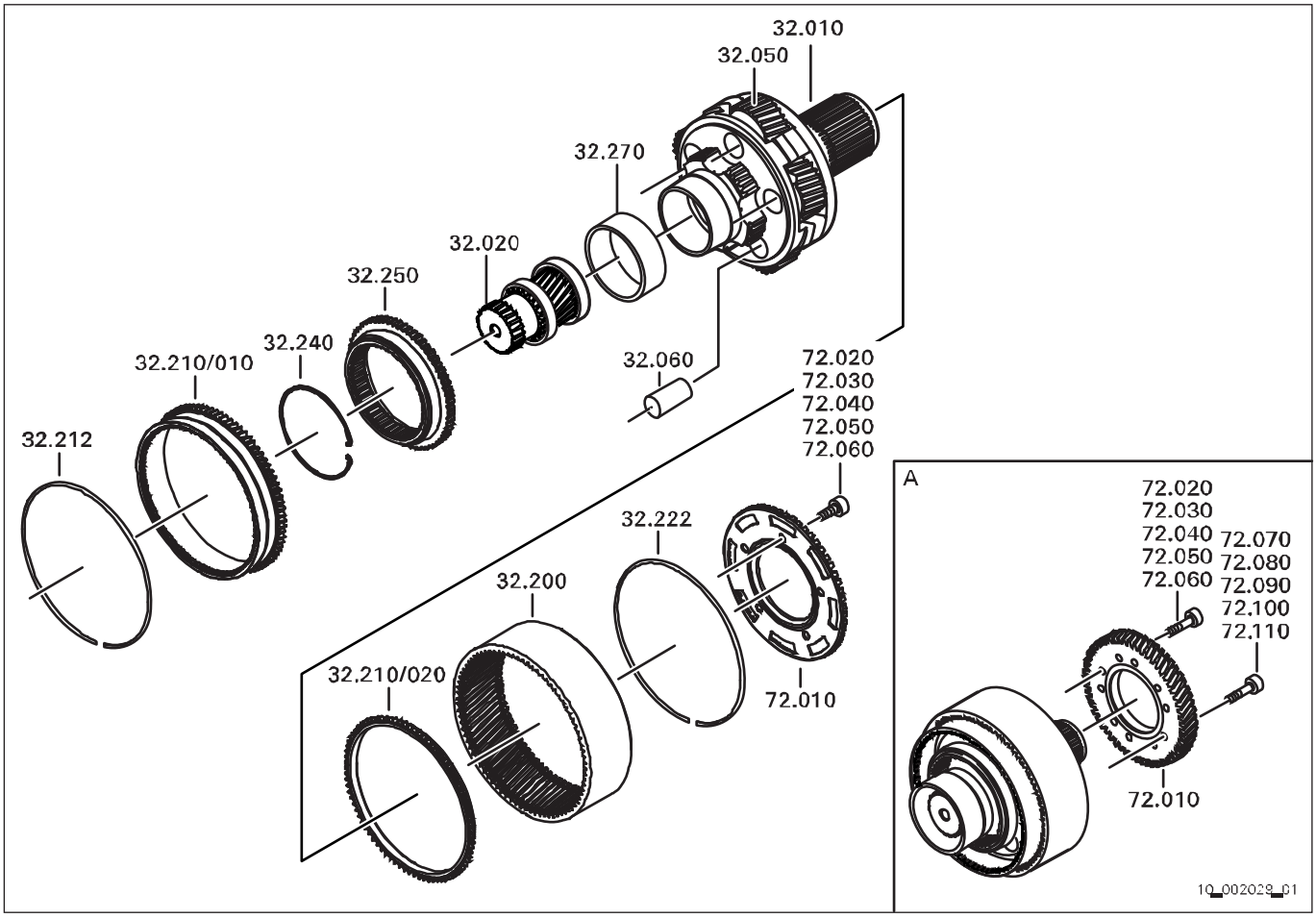

32.010	Planet carrier
32.020	Sun gear cpl.
32.050	Planetary gearset
32.060	Planetary bolt
32.200	Ring gear
32.210/010	Ring gear carrier
32.210/020	Thrust ring
32.212	Locking wire
32.222	Locking wire
32.240	Securing ring
32.250	Clutch body
32.270	Inner ring of needle roller bearing

TRAXON without INTARDER

72.010	Counting disk
72.020	Cap screw (2)
72.030	Cap screw (2)
72.040	Cap screw (2)
72.050	Cap screw (2)
72.060	Cap screw (2)

TRAXON with INTARDER

72.010	Helical gear [step-up gear]
72.020	Cap screw (1)
72.030	Cap screw (1)
72.040	Cap screw (1)
72.050	Cap screw (1)
72.060	Cap screw (1)
72.070	Cap screw (1)
72.080	Cap screw (1)
72.090	Cap screw (1)
72.100	Cap screw (1)
72.110	Cap screw (1)

A: Version with INTARDER

The step-up gear is only installed in the TRAXON with INTARDER.

Removing the step-up gear:

1 Remove ten cap screws **(1)** on the step-up gear **72.010**.

2 Remove step-up gear from planet carrier using two pry bars.

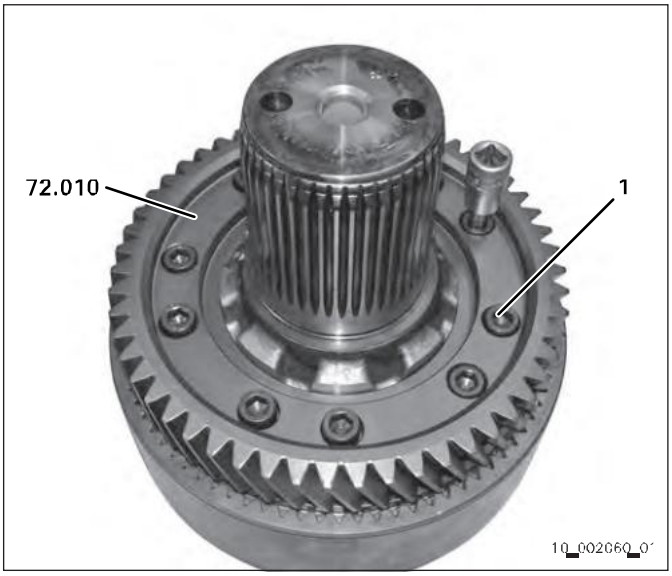

In the TRAXON without INTARDER, a counting disk is installed.

1 Remove five cap screws **(2)**.

2 Take off counting disk **72.010** from planet carrier.

3 Rotate planet carrier by 180°.

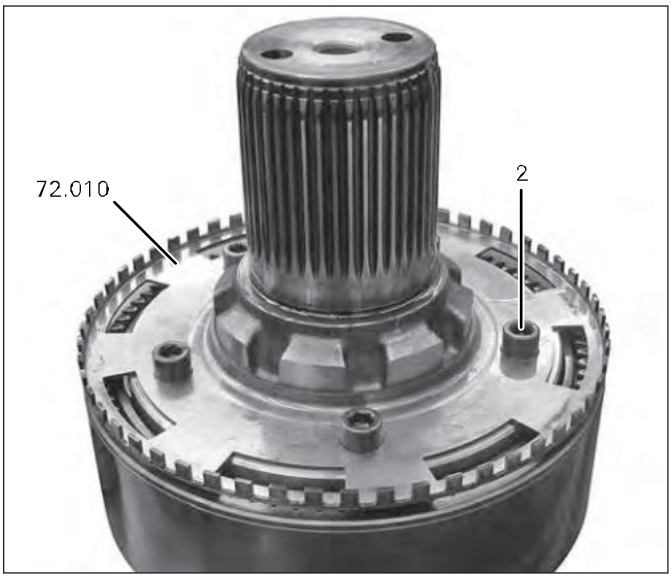

4

⚠ CAUTION

Risk of injury due to falling parts.
Slight to moderate injury possible.
⇨ Secure parts against falling down.

Remove locking wire **32.212**(e.g. with two small screwdrivers).
Ring gear **32.200** is released and can fall down. The ring gear's weight may cause crushing / bruising of body parts.

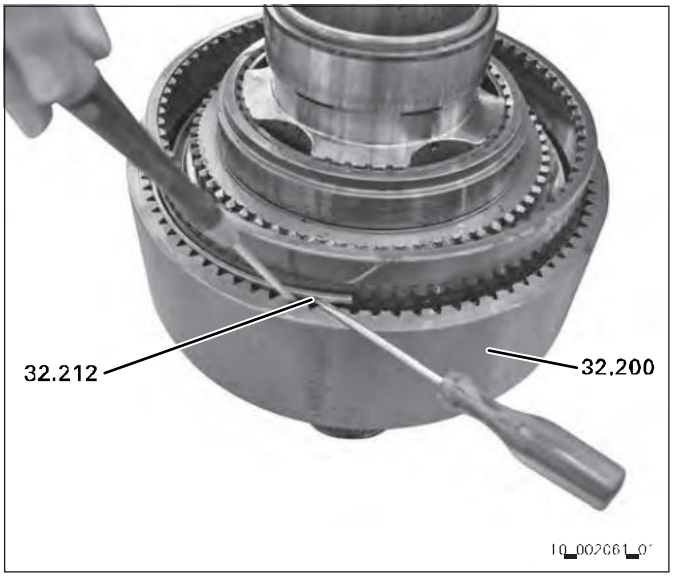

5 Remove ring gear carrier **32.210/010**.

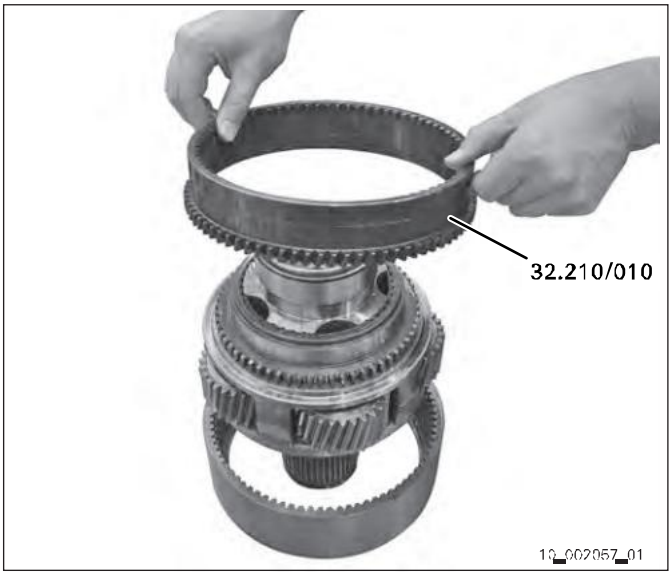

6 Take thrust ring **32.210/020** out of the ring gear **32.200**.

7 If required, remove locking wire **32.222** from the ring gear **32.200**.

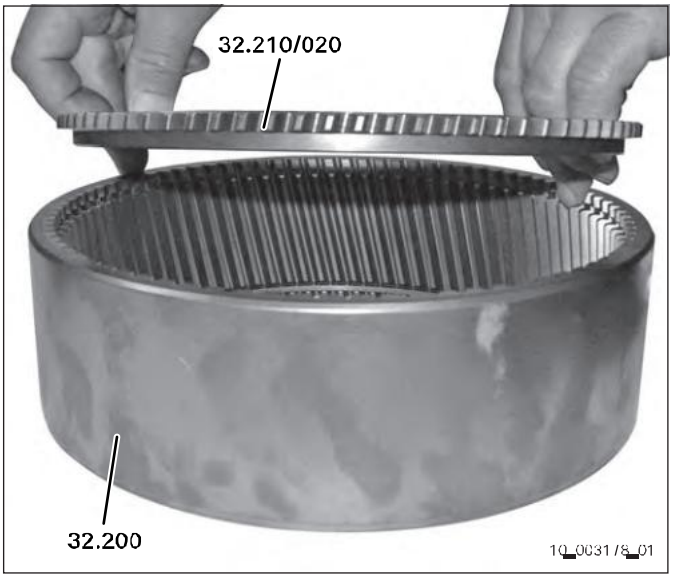

8 Use the fork **1X56.138.426** to contract the securing ring **32.240** and lift off the clutch body **32.250**.

9 Remove securing ring **32.240**.

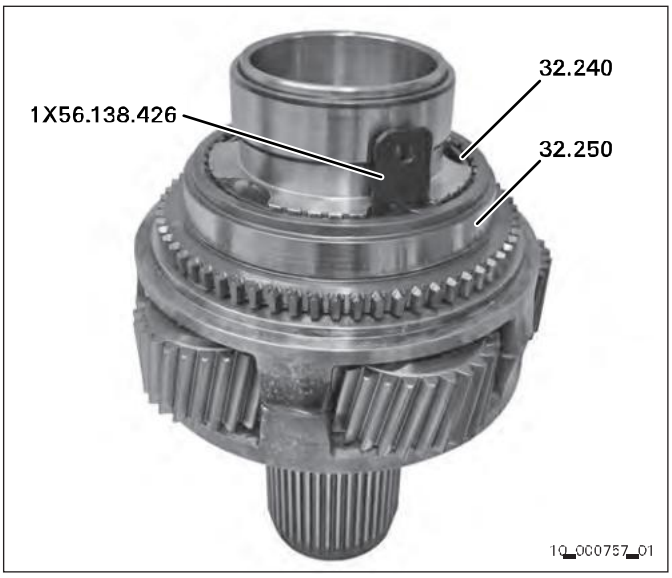

10 Rotate planet carrier by 180° and support sun gear.



11 Use a mandrel to drive out all planetary bolts **32.060**.

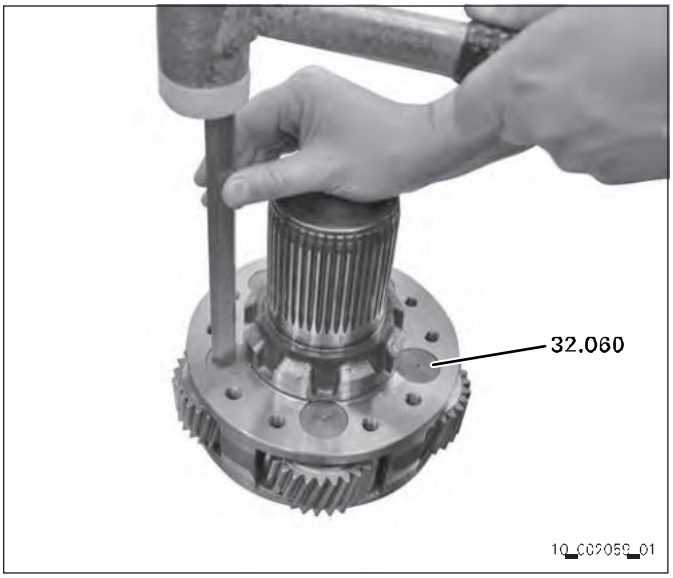

12

A planetary gearset consists of five planet gears, which must not be mixed up with planet gears of another planetary gearset.

Take out the planet gears **32.050** from the planet carrier **32.010**.

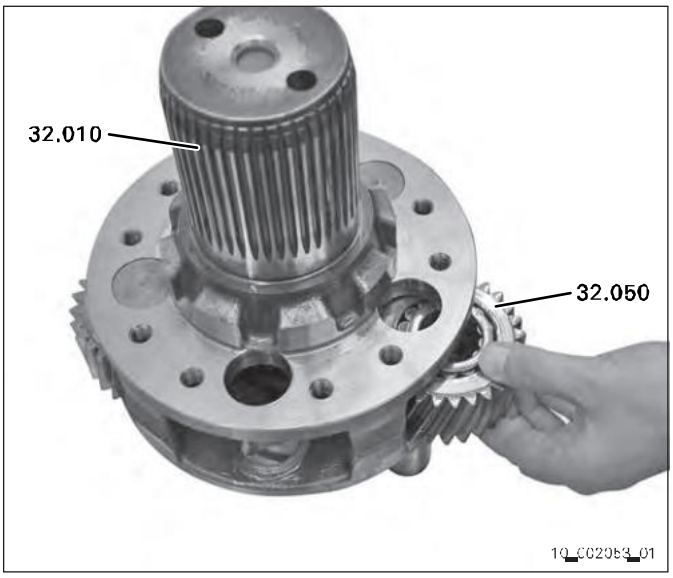

13 Remove intermediate disks **(1)** and rollers **(2)** from the planet gears.

Tie the five planet gears together to avoid a mix-up.

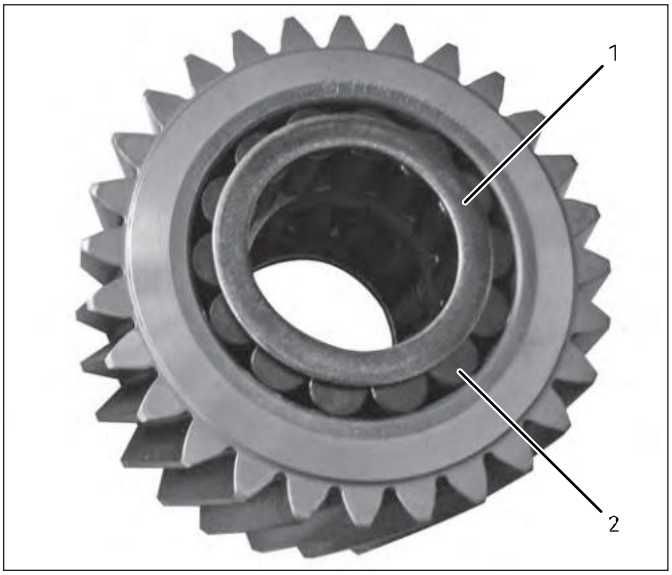

14

⚠ CAUTION

Risk of injury due to falling parts.
Slight to moderate injury possible.
⇨ Secure parts against falling down.

Lift off planet carrier **32.010**.
Fingers may get jammed by the weight of the planet carrier and the sun gear!
The sun gear **32.020** is disassembled later.

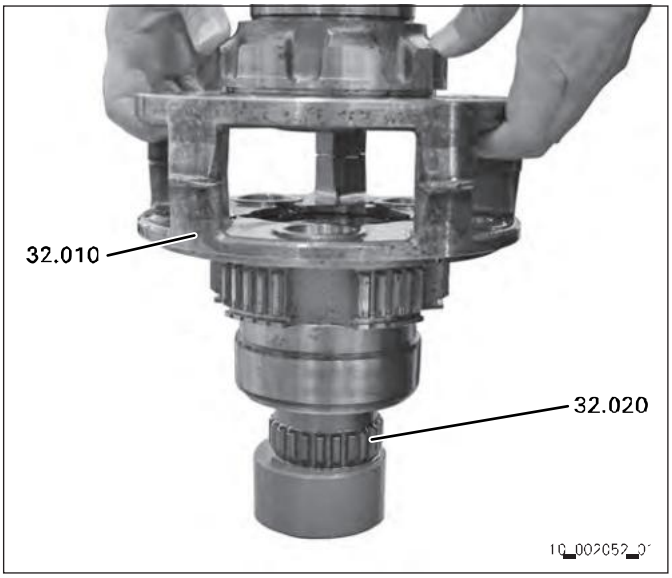

15 Rotate planet carrier by 180° and pull off bearing inner ring **32.270**.



16 Pull off bearing inner ring **(5) 32.270** using the extracting device **1X56.138.087**.

The extracting device **1X56.138.087** consists of:
Outer ring **(1)**
Split inner ring **(2)**
Split ring **(3)**
Plate **(4)**

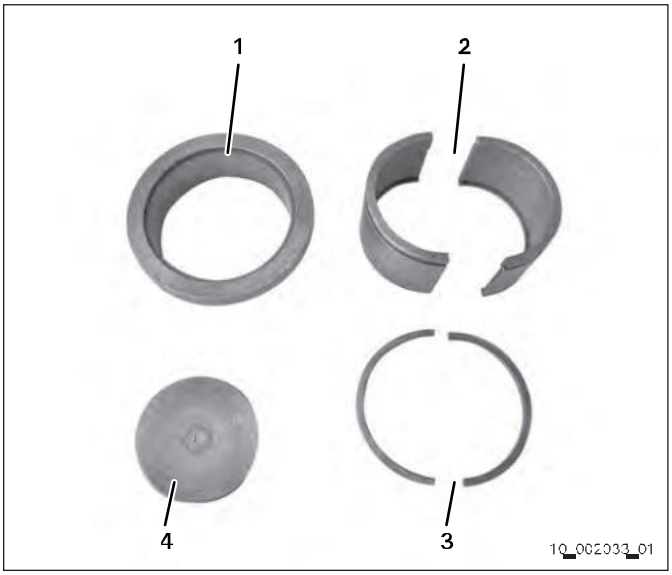

17 Place plate **(4)** on planet carrier.

18 Grip bearing inner ring **(5) 32.270** with split inner ring **(2)**.

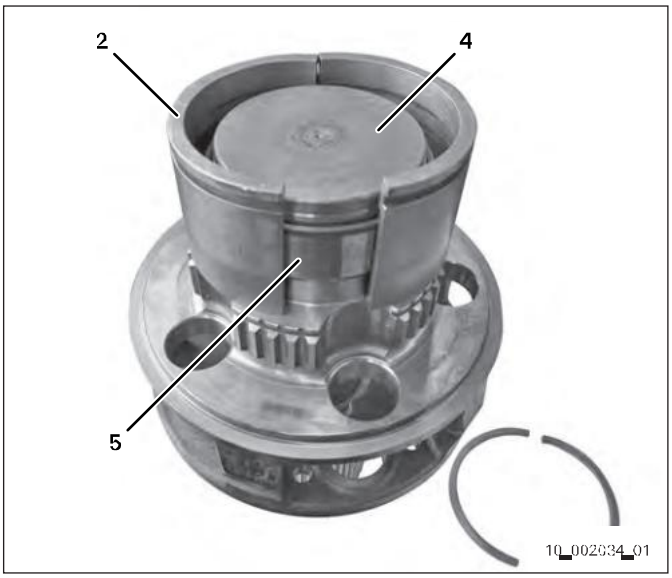

19 Fit outer ring **(1)**.

20 Insert split ring **(3)** until firmly home.

21 Pull up outer ring **(1)**.

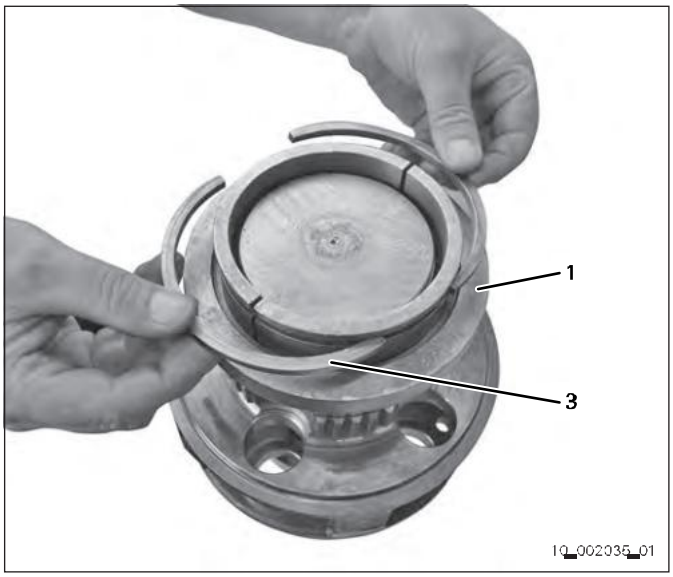

22 Place three-armed extractor at outer ring **(1)** of extracting device **1X56.138.087** and pull off bearing inner ring **(5) 32.270**.



Sun gear

32.020 Sun gear
32.030 Thrust washer
32.032 Driving pin
32.040 Thrust washer
32.042 Driving pin

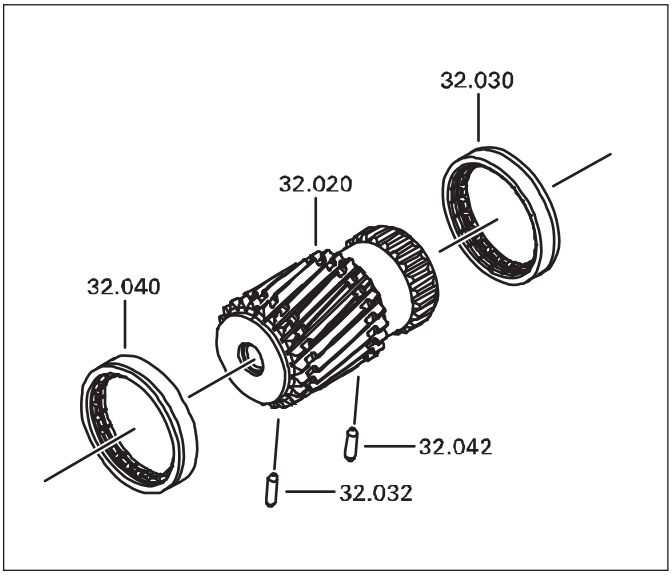

03ba50

Disassembling the sun gear

1 Offset both thrust washers **32.040**, **32.030** by half a tooth so that the driving pins **32.042**, **32.032** are released.

2 Remove driving pins **32.042**, **32.032** and remove thrust washers **32.040**, **32.030** from the sun gear **32.020**.

Assembling the sun gear

1 Position thrust washers **32.040**, **32.030** – installation position see photo – on the sun gear **32.020**.

2 Insert driving pins **32.042**, **32.032** into the sun gear.

3 Slide thrust washers **32.040**, **32.030** over the driving pins **32.042**, **32.032** and rotate. The driving pins are locked.

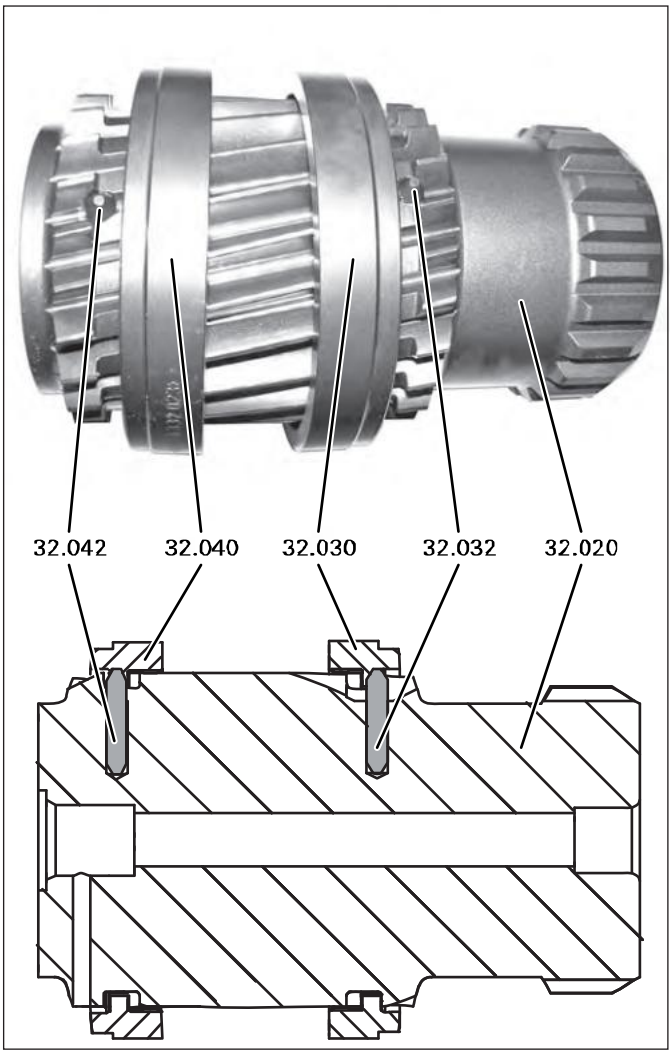

03555[illegible]1

Removing the range change group

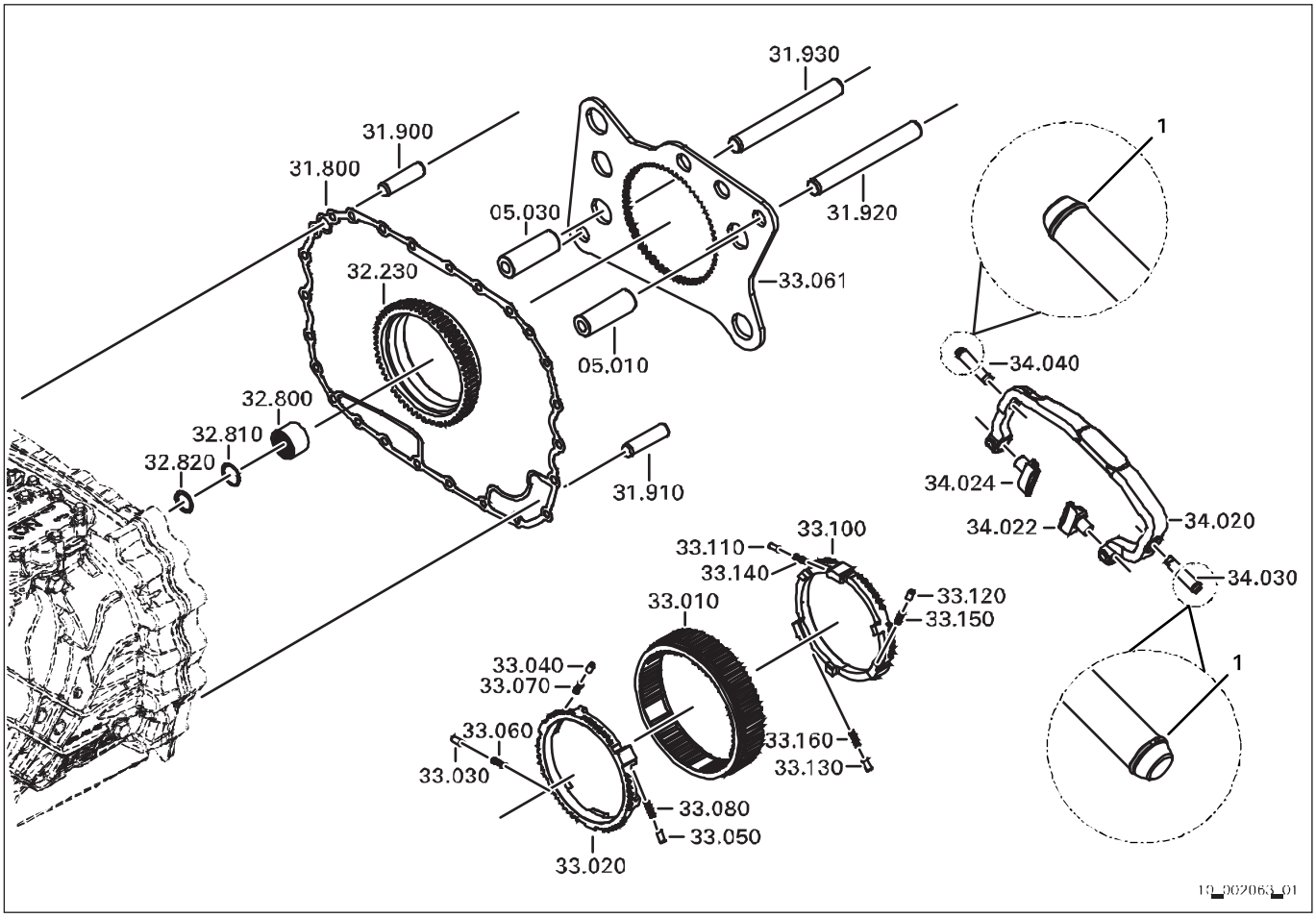

05.010 Reverse idler gear bolt (7)
05.030 Reverse idler gear bolt (7)
31.800 Flat seal
31.900 Cylindrical pin (6)
31.910 Cylindrical pin (6)
31.920 Cylindrical pin (5)
31.930 Cylindrical pin (5)
33.061 Plate
32.230 Clutch body
32.800 Sleeve
32.810 Securing ring
32.820 Shim
33.010 Slicing sleeve
33.020 Synchronizer ring
33.030 Bush (4)
33.040 Bush (4)
33.050 Bush (4)
33.060 Compression spring (3)
33.070 Compression spring (3)
33.080 Compression spring (3)
33.100 Synchron'zer ring
33.110 Bush (4)
33.120 Bush (4)
33.130 Bush (4)
33.140 Compression spring (3)
33.150 Compression spring (3)
33.160 Compression spring (3)
34.020 Swing fork
34.022 Sliding pad (2)
34.024 Sliding pad (2)
34.030 Pivot bolt (1)
34.040 Pivot bolt (1)

1 Remove the sleeve **32.800**.

2 If required, remove securing ring **32.810** from sleeve.

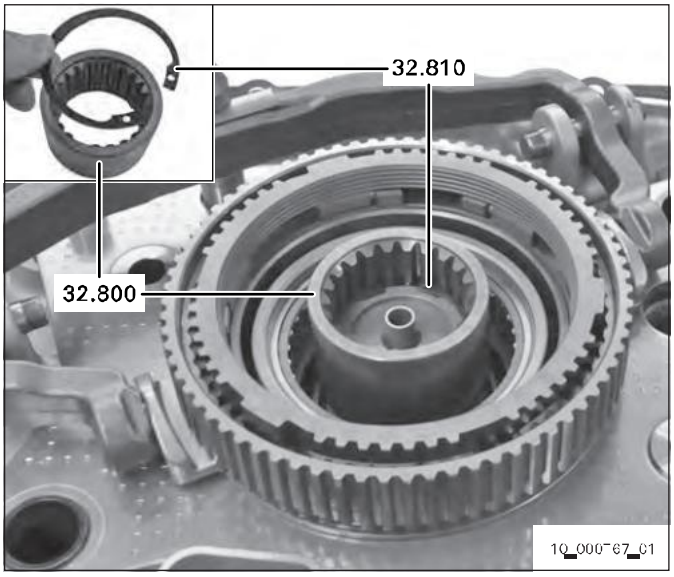

3 Remove washer **32.820**.

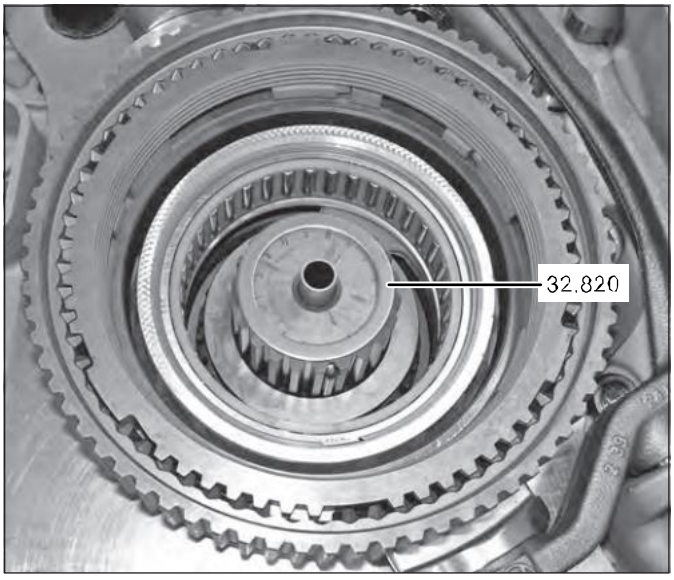

4 Pull out both pivot bolts **(1)**.

If the pivot bolts **(1)** touch the assembly stand, remove securing ring **(2)**.

5 Remove swing fork **34.020**.

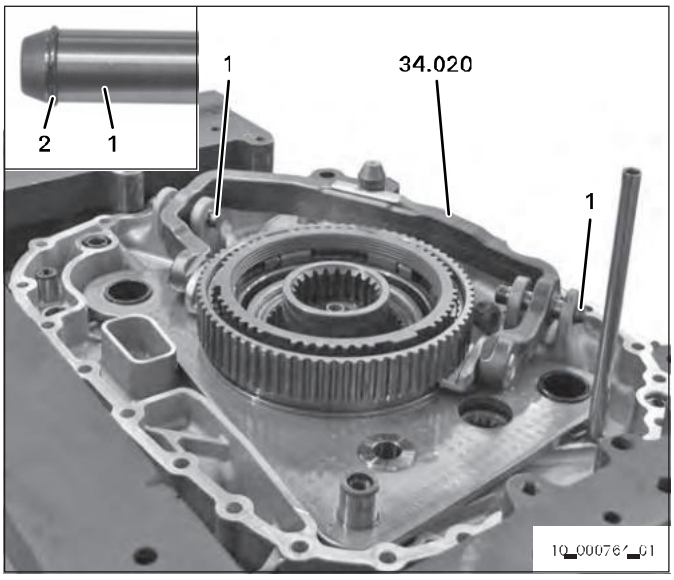

6 Take sliding pads **(2)** out of swing fork.

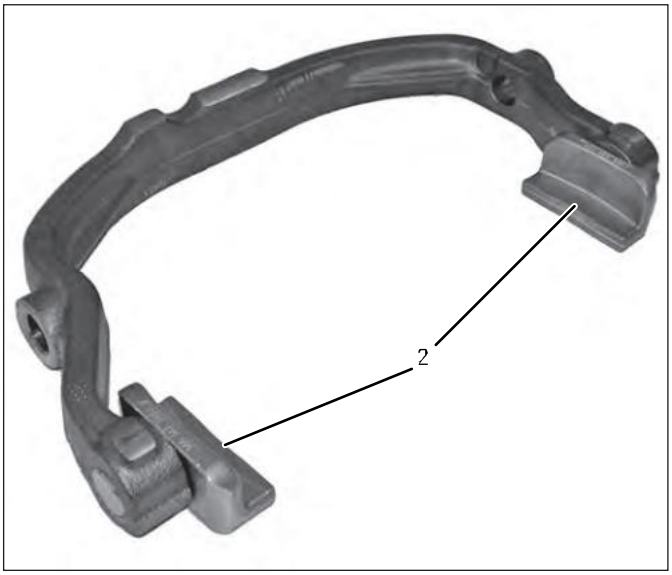

7 Remove flat seal **31.800** and clean sealing faces.

8 Completely remove the sliding sleeve **33.010** together with the synchronizer unit.

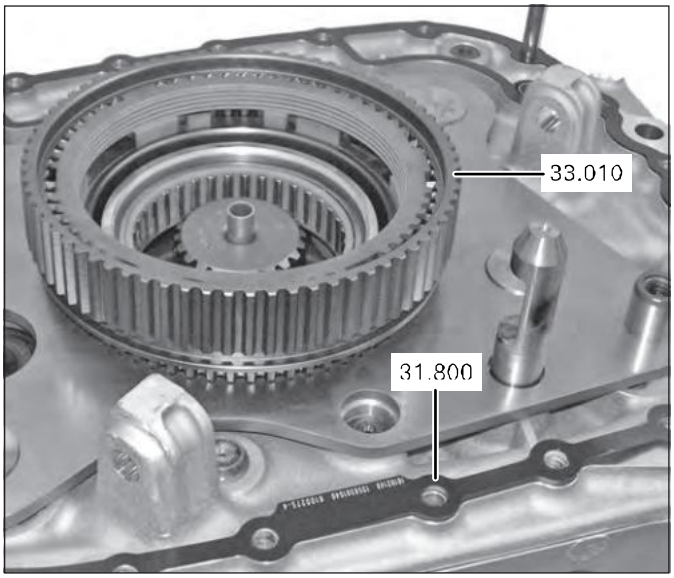

9

⚠ CAUTION

Risk of injury due to parts under spring tension.
Slight to moderate injury possible.
⇨ Wear protective goggles.

Cover synchronizer unit with a cloth. Synchronizer rings **33.020, 33.100** are under spring tension. Carefully take synchronizer rings **33.020, 33.100** out of the sliding sleeve **33.010**. Six compression springs **(3)** and six bushes **(4)** jump out.

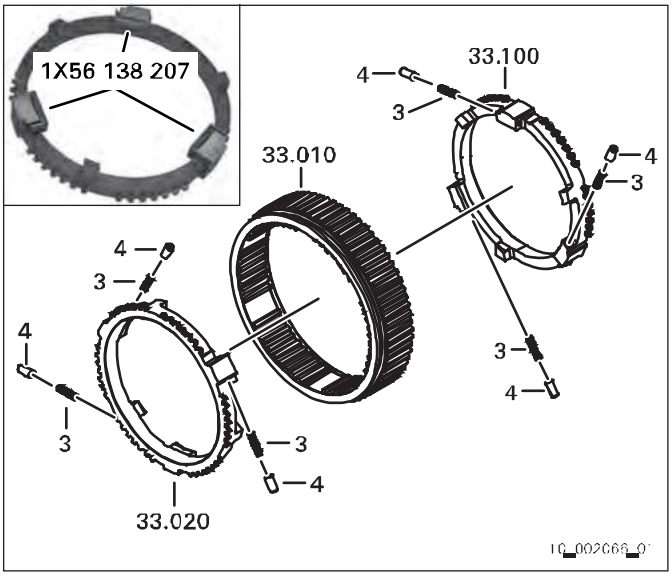

10 Remove two cylindrical pins **(5) 31.920**, **31.930** with a standard slide hammer. Using two pry bars, first lift and then remove plate **33.061**.

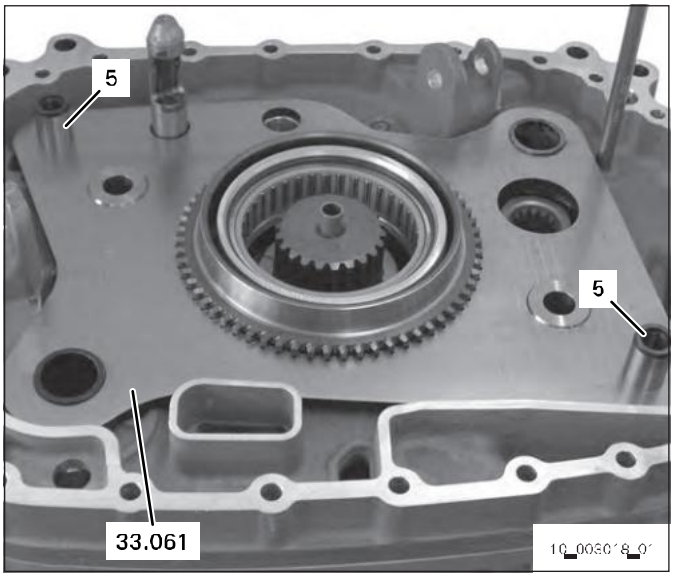

11 Remove clutch body **32.230**.

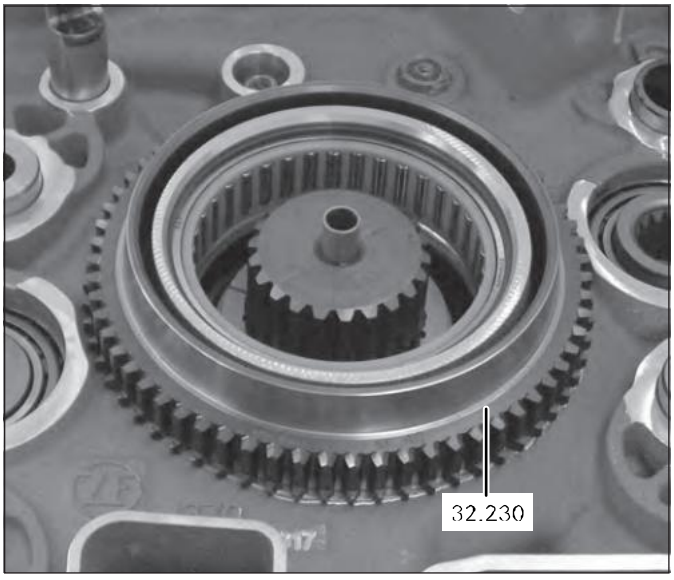

035696_1

12 Take out both reverse idler gear bolts **(7) 05.010**, **05.030**, e. g. using a solenoid.

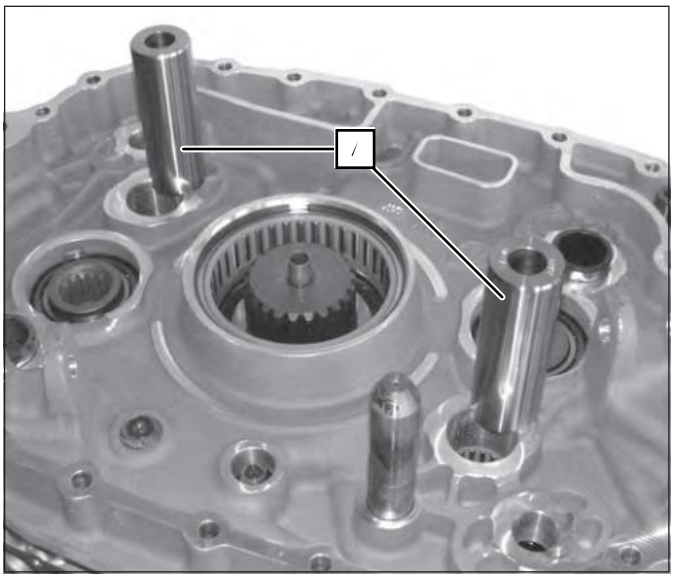

13 Insert retaining bolts **1X56 138 732** for fixing the two R gear reversing gears.

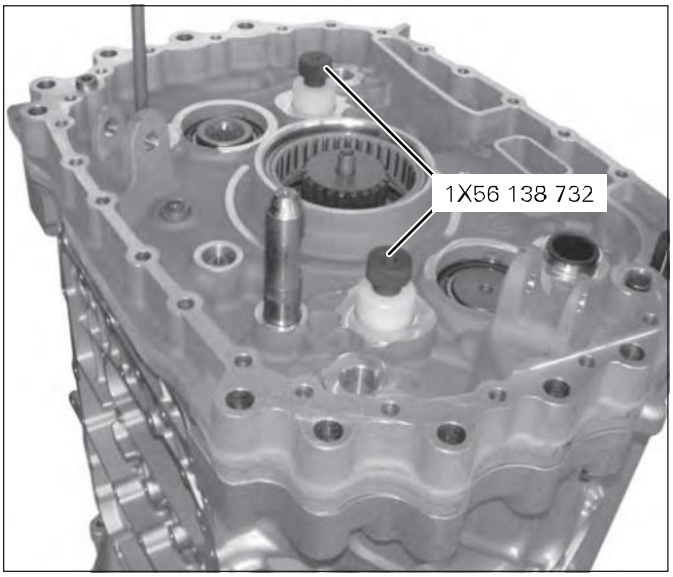

14 Unsnap snap ring **32.280** from groove.

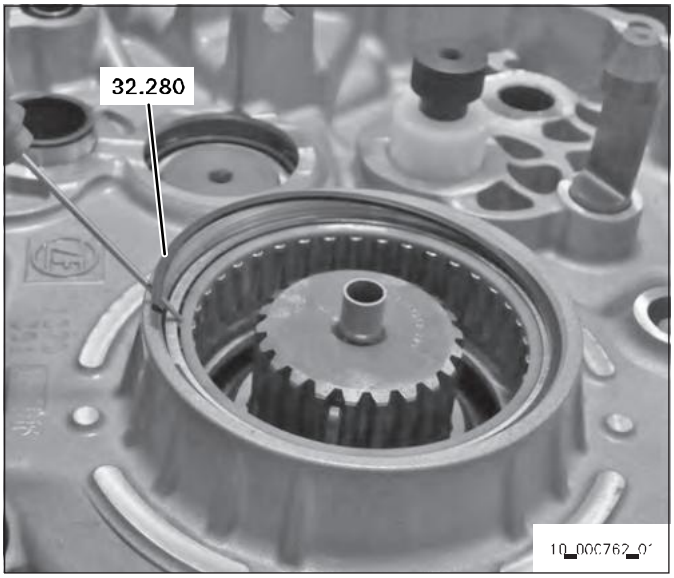

15 Place assembly aid **1X56.138.205** on oil tube. Remove outer ring of cylindrical roller bearing **32.270** from bearing support using the puller **1X56.138.745**.

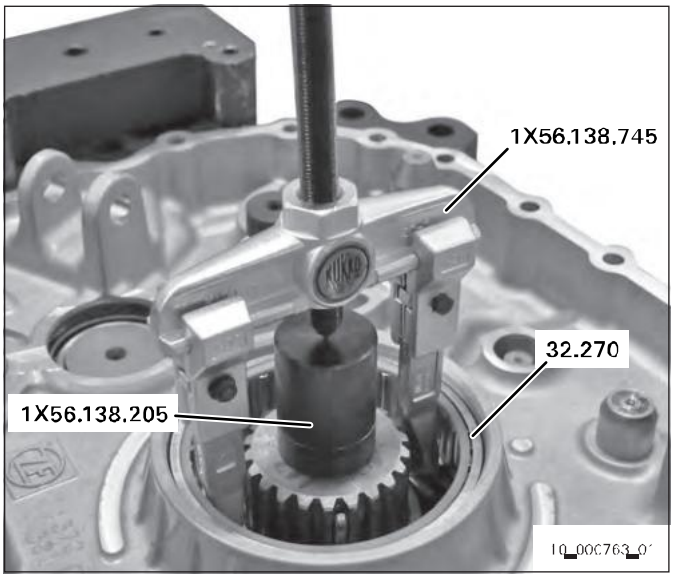

16 Remove two cylindrical pins **(6) 31.900**, **31.910** with a standard slide hammer.

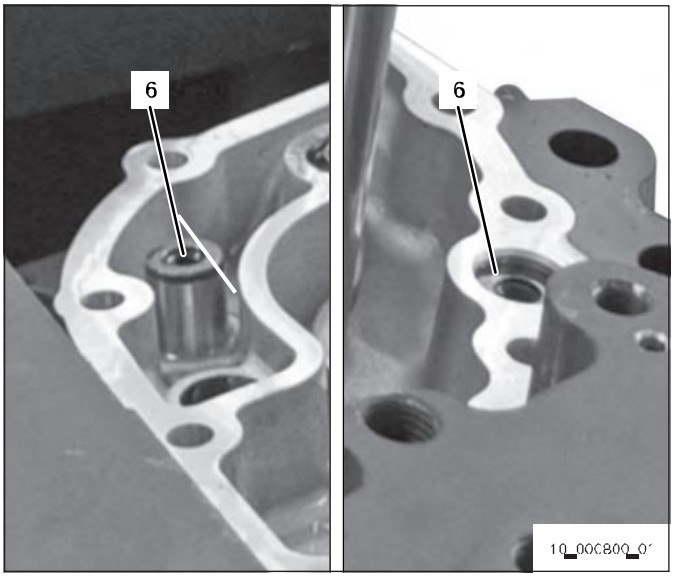

Rotating the transmission without assembly stand

Fit assembly fixture **1X56.138.729** to transmission.

1 Insert centering base **1X56.138.729/2** and spacer **1X56.138.729/5** for R/C gearshift rail; they are delivered together with the assembly fixture **1X56.138.729**.

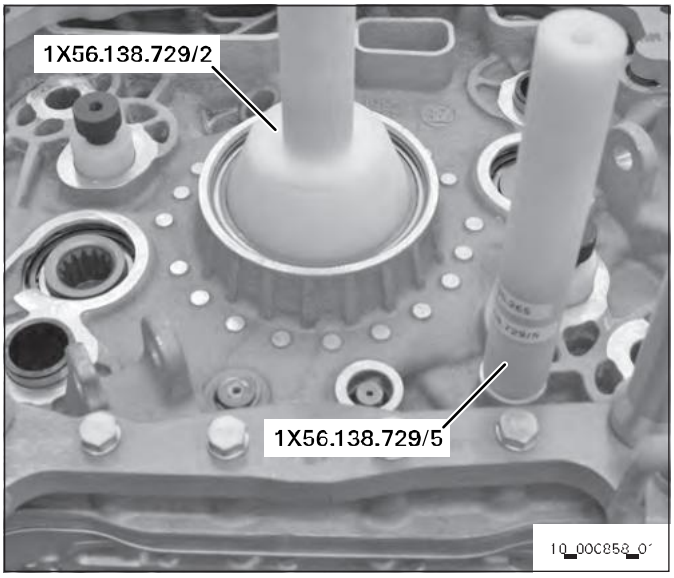

2 Attach assembly fixture **1X56.138.729** at the transmission using at least eight screws. Attach two screw-on adapters **1T66.161.764** to the assembly fixture.

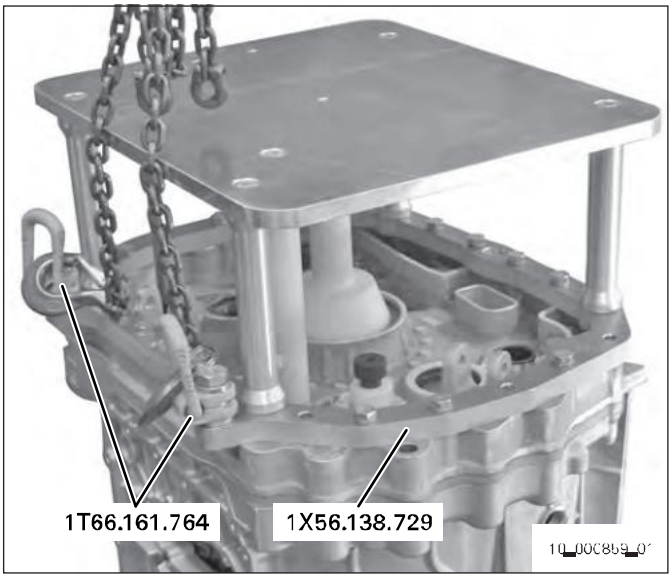

3 Attach 3-strand chain to the screw-on adapters.

⚠ CAUTION

Risk of crushing due to moving load.
Slight to moderate injury possible.
- ⇨ Move load slowly and carefully.
- ⇨ Keep sufficient distance to load.
- ⇨ Do not reach into danger area.

4 Use a hoist to lift the transmission and put it horizontally on the workshop floor.
The workshop floor must be clean and level.



5 Fasten the 3-strand chain to the lugs **(1)** on the transmission.

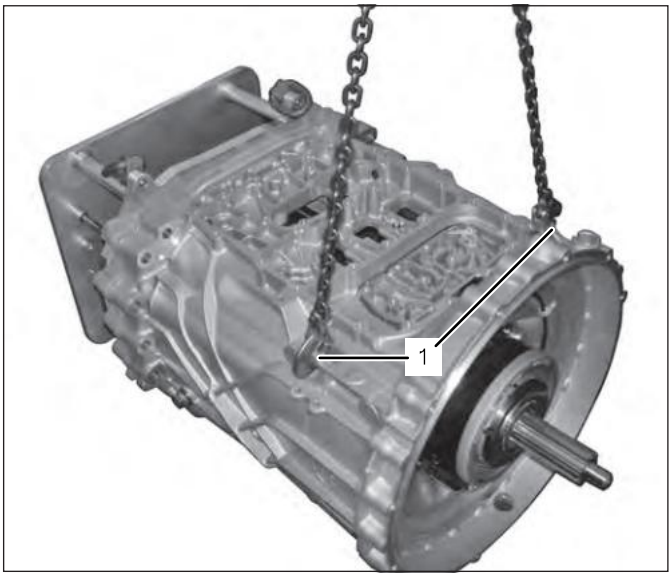

03a 19_1

6 Lift transmission with a hoist. Put transmission with assembly fixture **1X56.138.729** on the workshop floor.

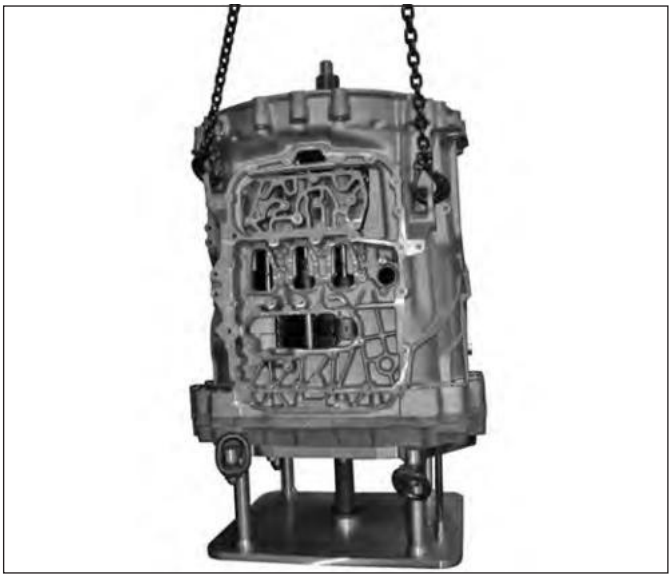

035720

Rotating the transmission at the assembly stand

Preparing the measurement

1 Insert centering base **1X56.138.729/2** and spacer **1X56.138.729/5** for R/C gearshift rail; they are delivered together with the assembly fixture **1X56.138.729**.

2 Place assembly fixture **1X56.138.729** onto transmission and attach with four brackets **(1)**.
Attach assembly fixture **1X56.138.729** to the transmission using at least eight screws.

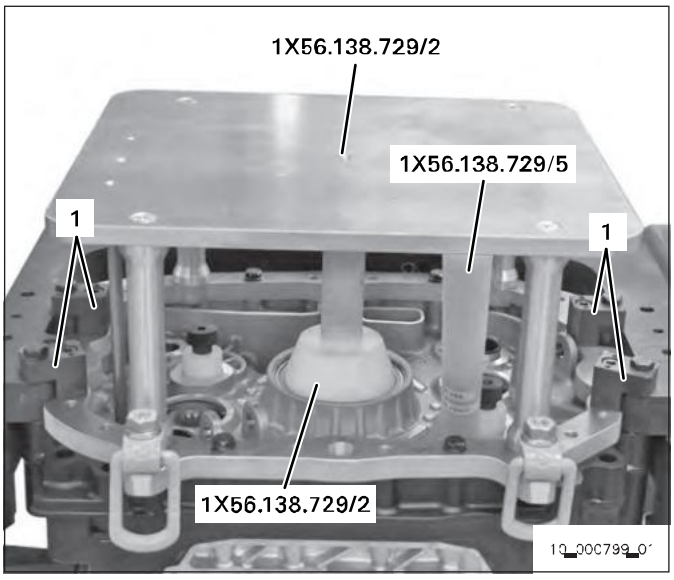

19_000799_01

Removing the connection plate

Before removing the connection plate, remove the compressed-air connection *(refer to Chapter Compressed-Air Connection)*.

02.1400 MT cover
02.1402 O-ring
02.1410 Torx screw
02.1420 Torx screw
02.1600 S/G cover
02.1602 O-ring
02.1610 Torx screw
02.1620 Torx screw
02.1700 R/C cover
02.1702 O-ring
02.1710 Torx screw
02.1720 Torx screw

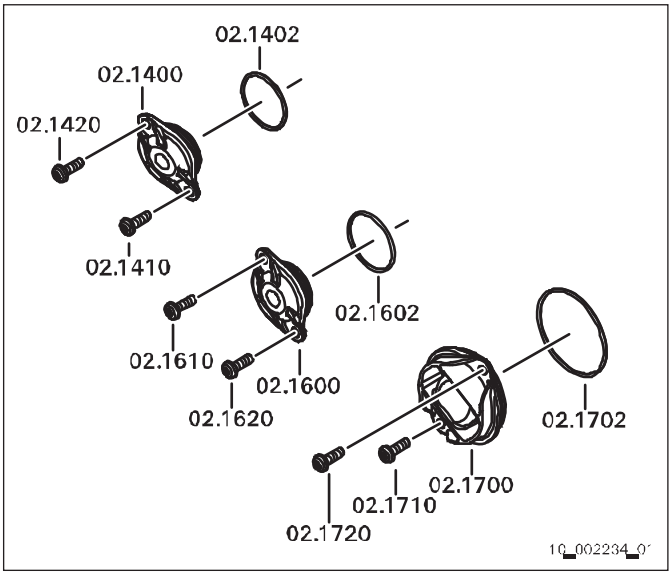

1 Remove torx screws at the covers (R/C, S/G, MT).

Abbreviations used:
Main transmission (MT)
Splitter group (S/G)
Range change group (R/C)

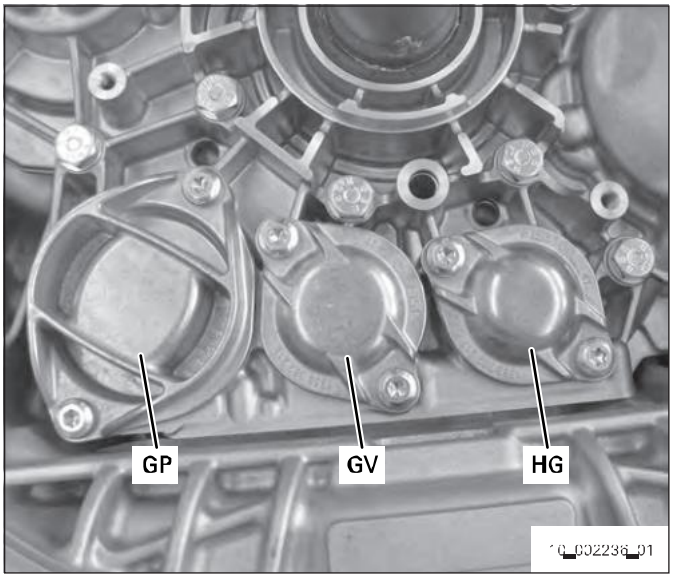

2 Remove all covers (R/C, S/G, MT) and O-rings.

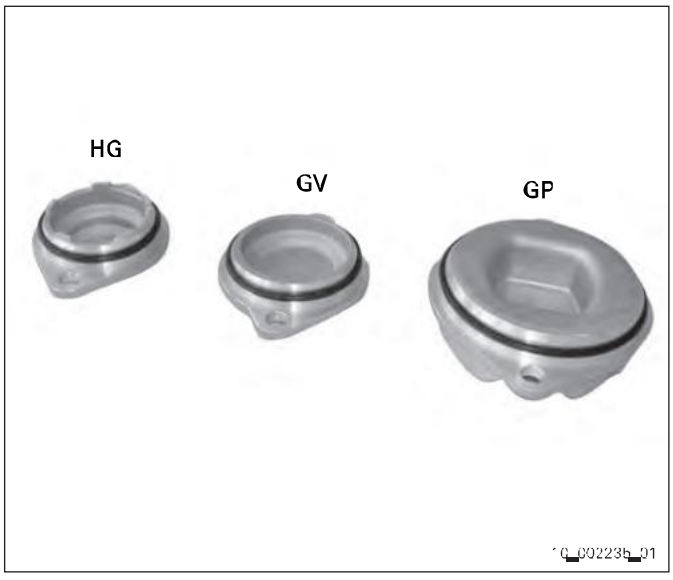

3 Remove the R/C piston **34.070**.

Insert protective sleeve **AA01.388.796**. Spread securing ring **(/160)** with pliers **1X56.138.803** and pull out R/C piston **34.070**.

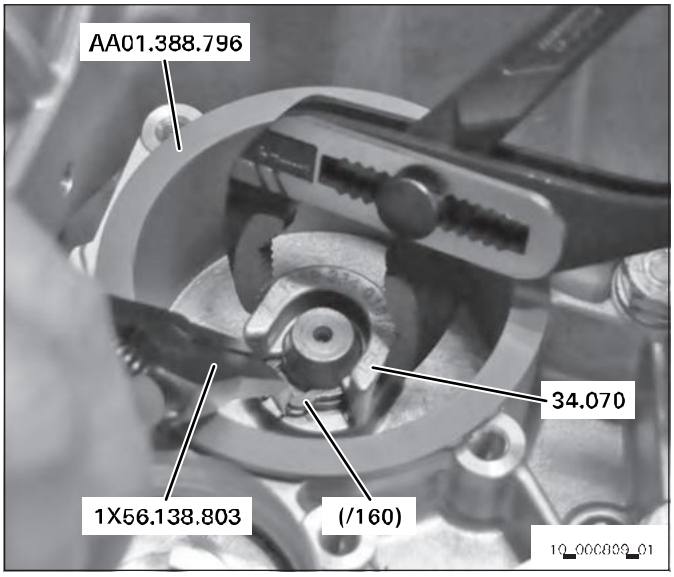

R/C piston

4 Remove S/G piston **12.080**.

Insert protective sleeve **AA01.388.799**. Spread securing ring **(/160)** with pliers **1X56.138.803** and pull out S/G piston **12.080**.

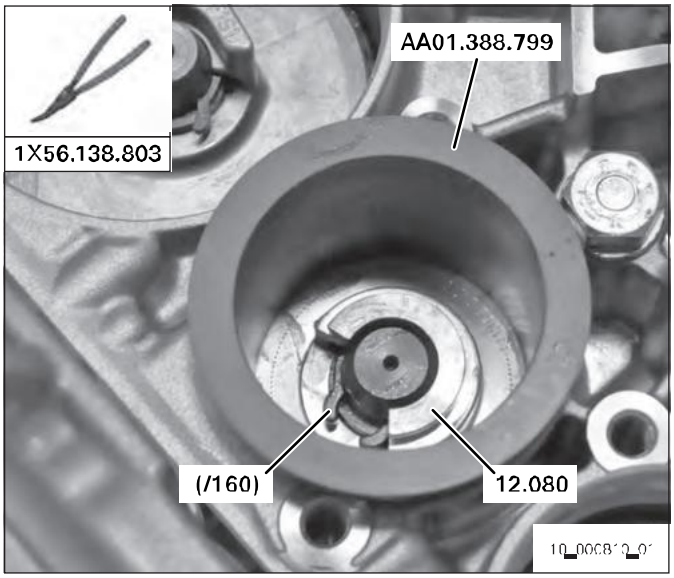

S/G piston

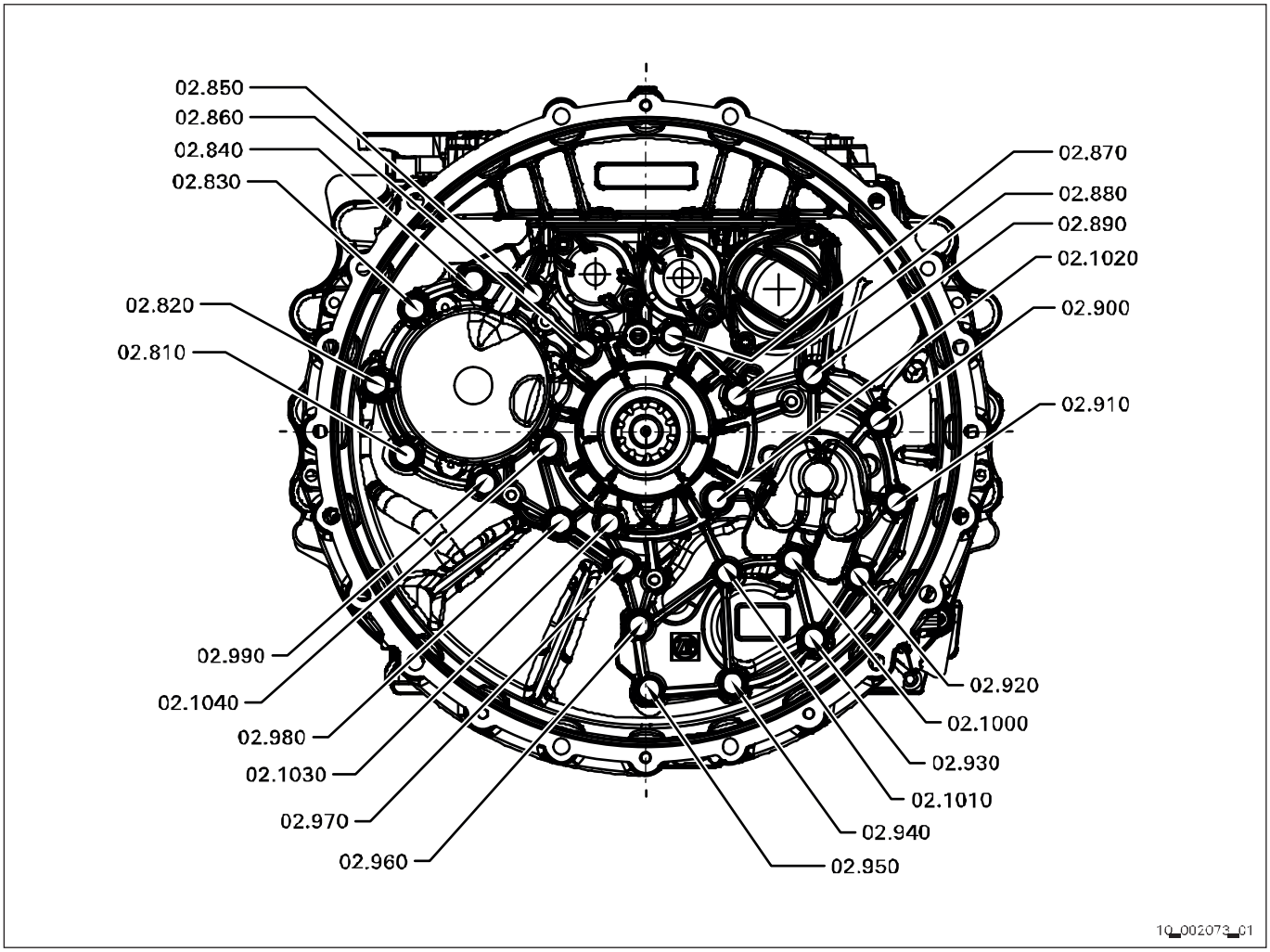

02.810 Hexagon screw **(1)**
02.820 Hexagon screw **(1)**
02.830 Hexagon screw **(1)**
02.840 Hexagon screw **(1)**
02.850 Hexagon screw **(1)**
02.860 Hexagon screw **(1)**
02.870 Hexagon screw **(1)**
02.880 Hexagon screw **(1)**
02.890 Hexagon screw **(1)**
02.900 Hexagon screw **(1)**
02.910 Hexagon screw **(1)**
02.920 Hexagon screw **(1)**
02.930 Hexagon screw **(1)**
02.940 Hexagon screw **(1)**
02.950 Hexagon screw **(1)**

02.960 Hexagon screw **(1)**
02.970 Hexagon screw **(1)**
02.980 Hexagon screw **(1)**
02.990 Hexagon screw **(1)**
02.1000 Hexagon screw **(1)**
02.1010 Hexagon screw **(1)**
02.1020 Hexagon screw **(1)**
02.1030 Hexagon screw **(1)**
02.1040 Hexagon screw **(1)**

5 Remove 24 hexagon screws **(1)** from the connection plate.

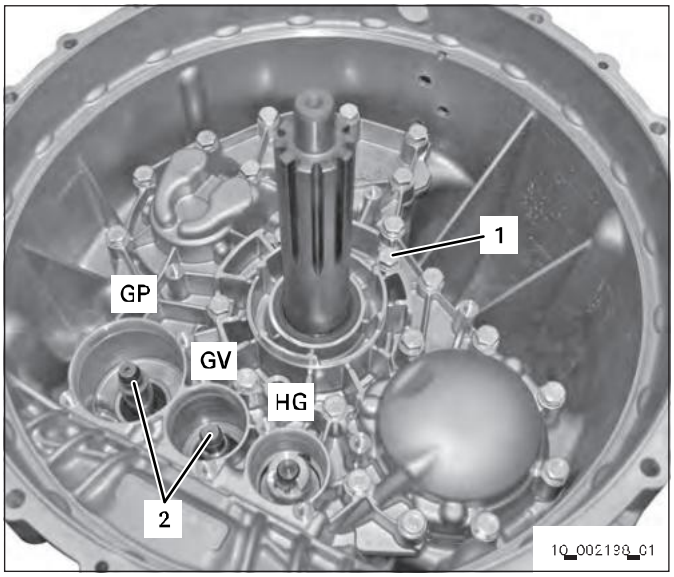

6 Screw in two M8 eyelet bolts **1T66.159.409** into the connection plate **02.010**.
Carefully lift off connection plate.
If required, screw in two M10 guide pins to avoid canting.

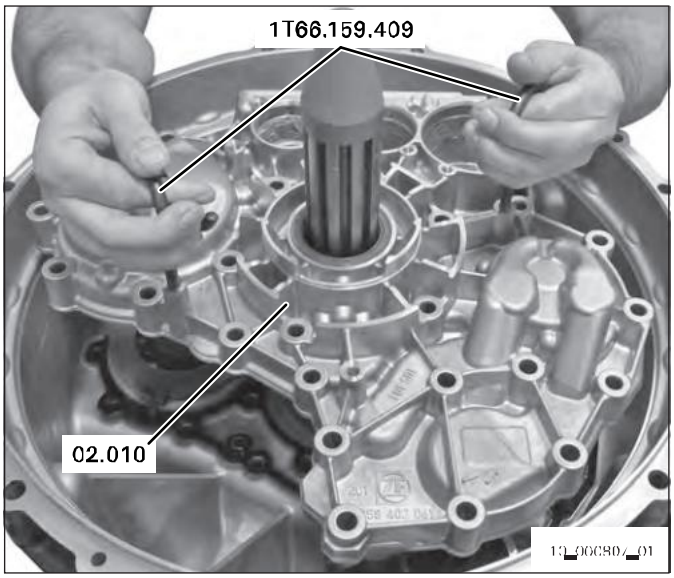

7 Remove transmission brake **(1)** and seal **02.800**.

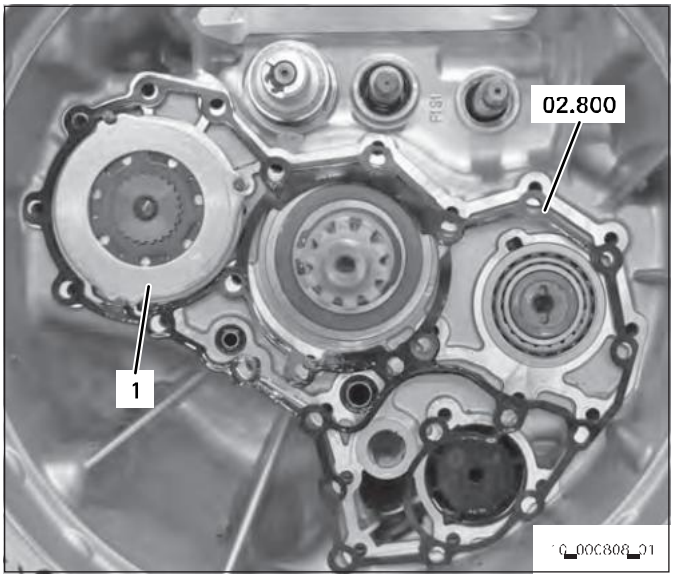

8 Take drag piston **06.090** out of connection plate.

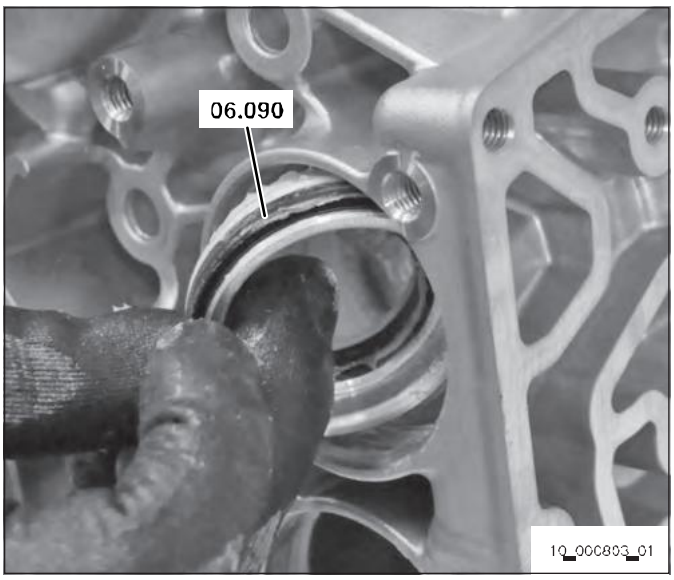

9 Unsnap securing ring with pliers **1X56.138.803**.

10 Completely remove MT piston **06.100** with drag piston **06.080** from the gearshift rail.

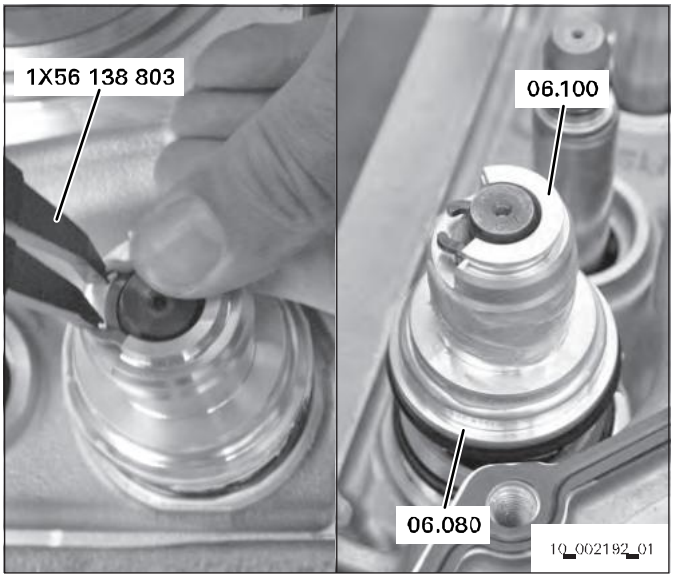

11 Remove plain bearing (cylinder bottom) **06.110**.

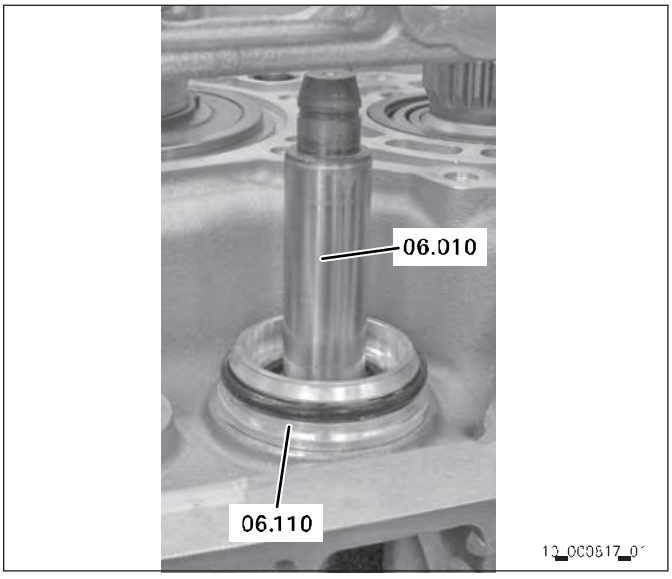

12 Remove compression spring **07.030** and detent bolt **07.040**.

13 Remove shims **03.012, 03.032**.

The seals **10.012** and **10.024** are removed later in the Chapter Disassembling the Clutch Housing.

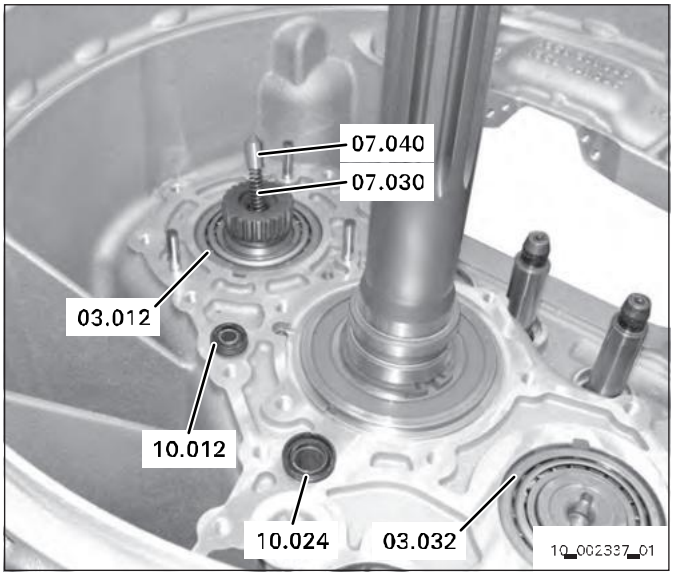

14 Remove solenoid **10.060**.

15 Take out screen insert **10.050** and filter element **10.040**.

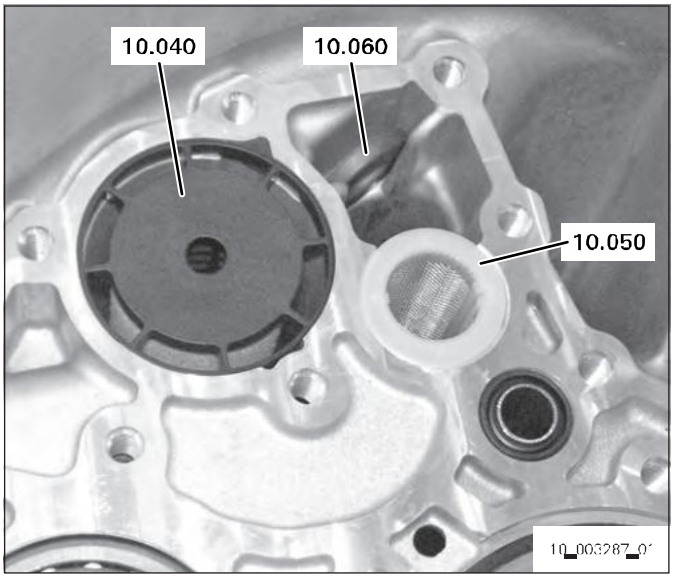

16 Remove washer **02.040**.

17 Remove both O-rings **02.1200, 02.1210**.

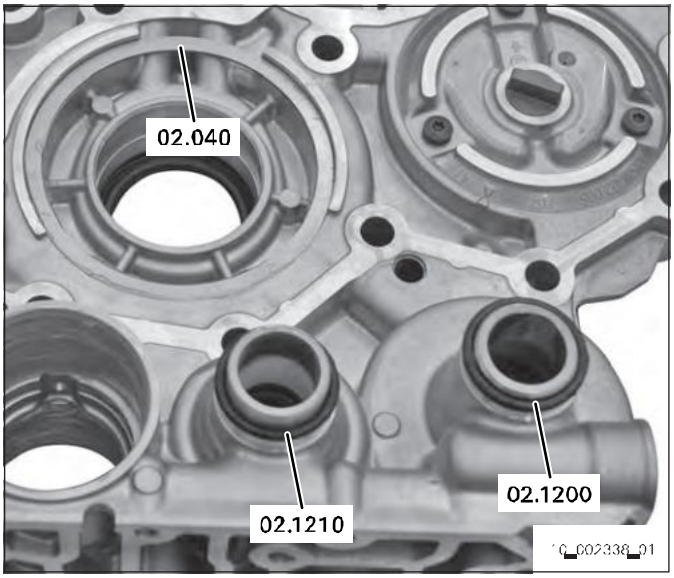

18 Remove transmission brake piston **07.010** from the connection plate, e. g. using suitable pliers.

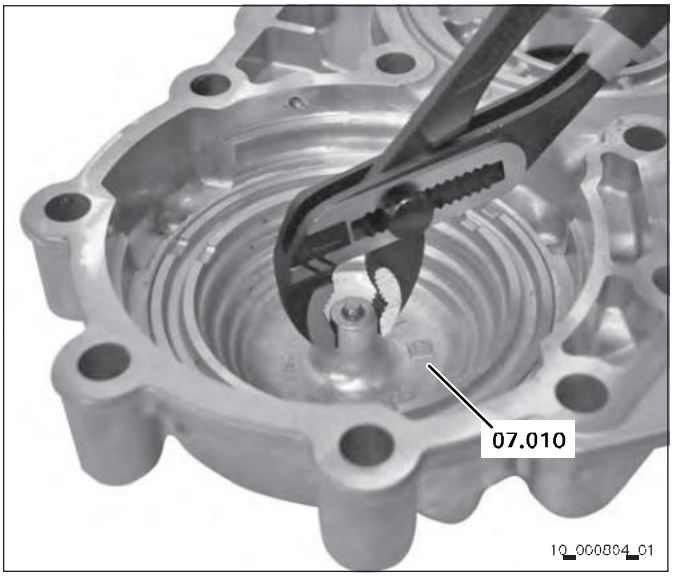

19 Remove three torx screws **(1) 08.050**, **08.060**, **08.070** and take off pump cover **08.030**.

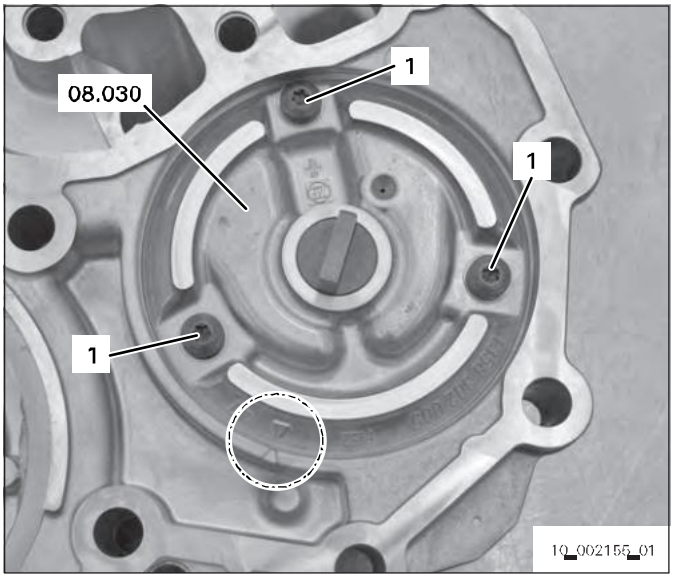

20 Take out pump shaft **08.020** and rotor **08.010**.

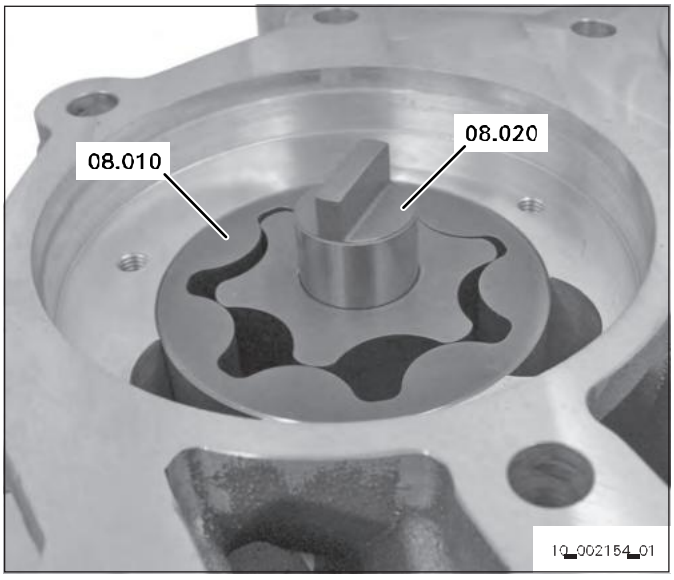

21 Remove cap-shaped seals **34.080** and **12.100** using a suitable plastic punch.

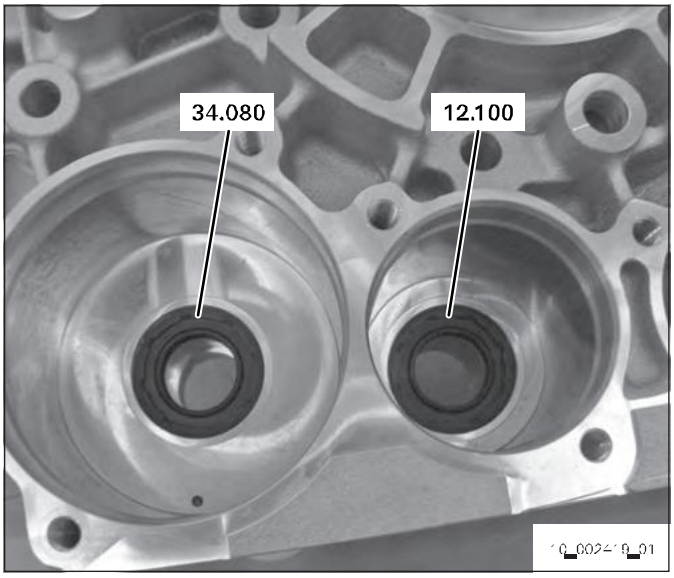

22 If the plain bearing is replaced, support connection plate and press it out with tool **1X56.138.741**.

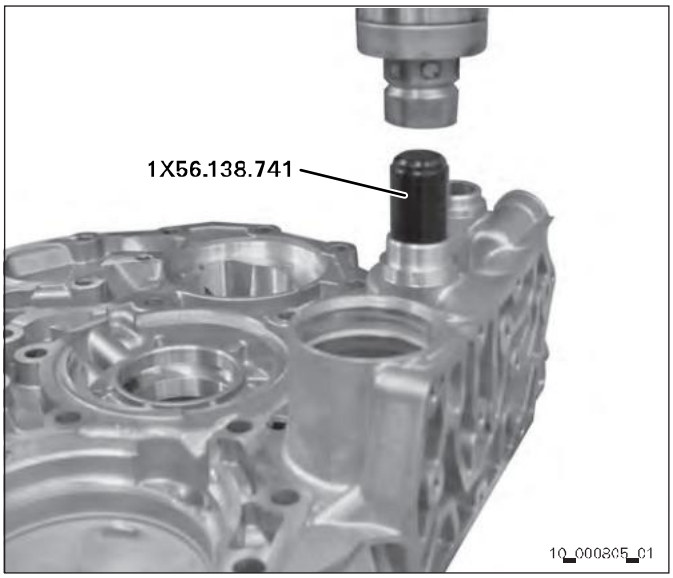

23 Remove shaft sealing ring **02.020** with a suitable tool.

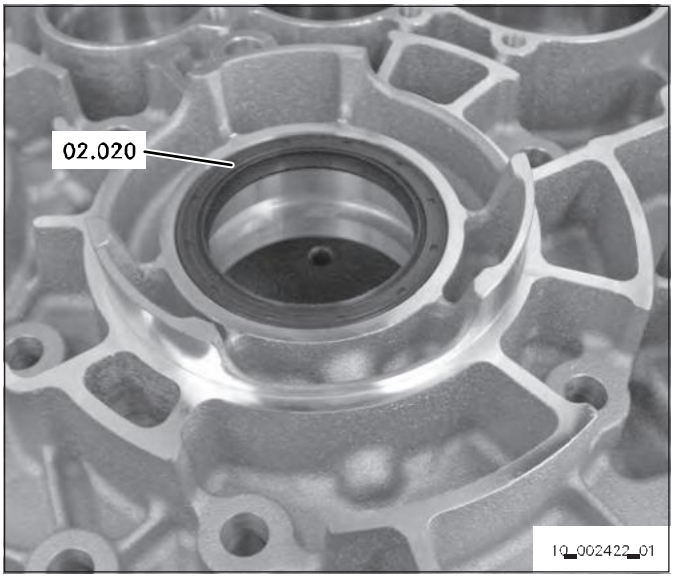

Disassembling the R/C piston

34.070 R/C piston
/110 Piston
/120 Grooved ring
/130 Grooved ring
/140 O-ring
/150 Supporting ring
/160 Securing ring

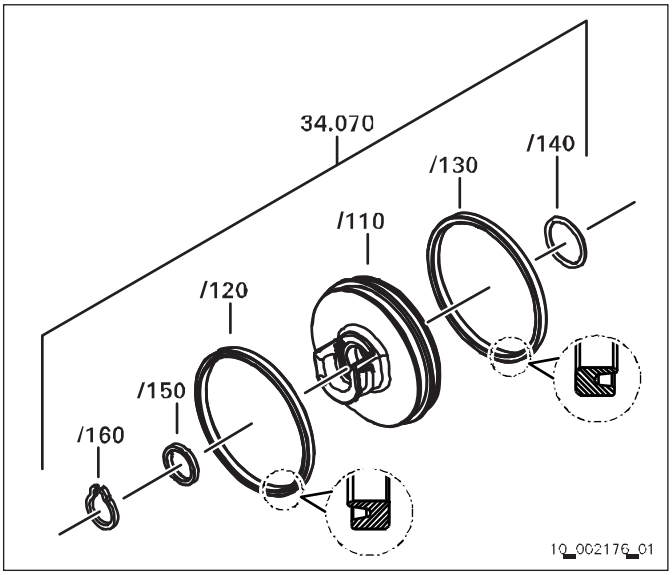

1 Remove supporting ring **(/150)** and securing ring **(/160)** from R/C piston **37.070**.

2 Remove grooved rings **(/120, /130)**.

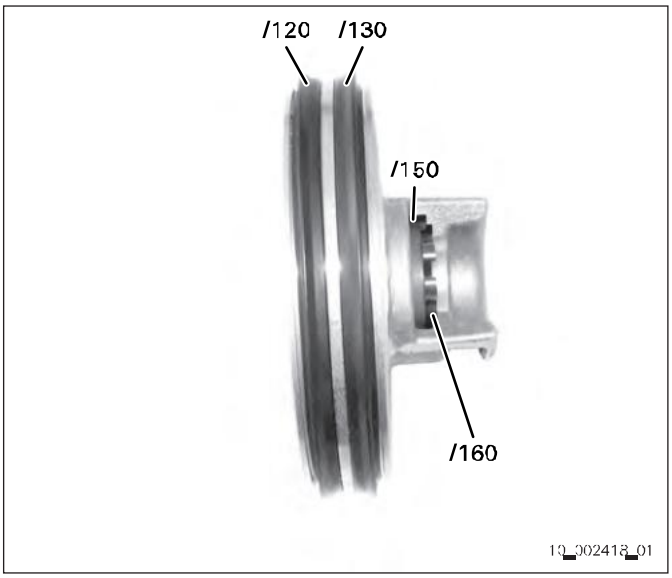

3 Remove O-ring **(/140)** from piston **(/110)**.

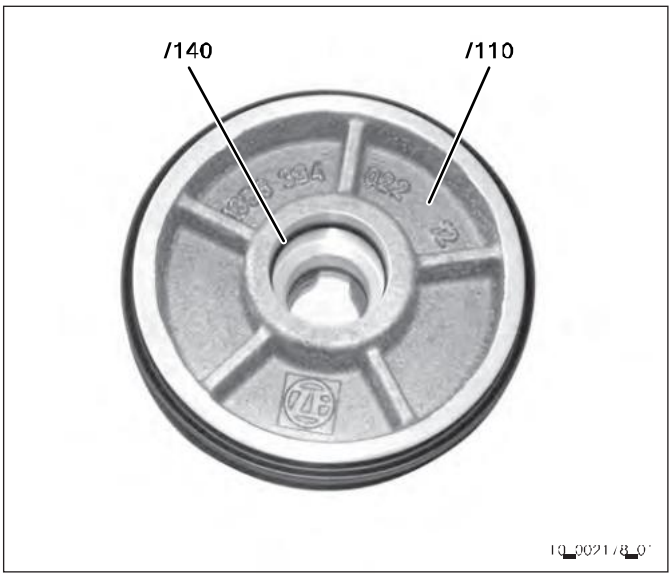

Disassembling the S/G piston

12.080 S/G piston
/110 Pistor
/120 Grooved ring
/130 Grooved ring
/136 Guide ring
/150 Supporting ring
/160 Securing ring

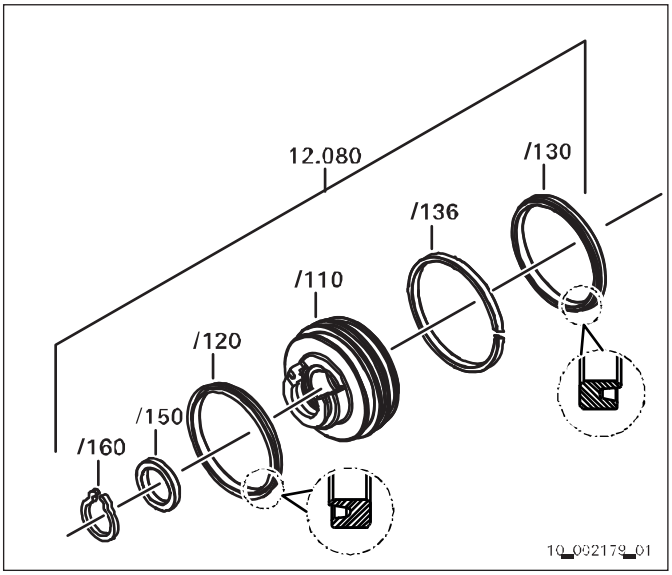

1 Remove guide ring **(/136)**.

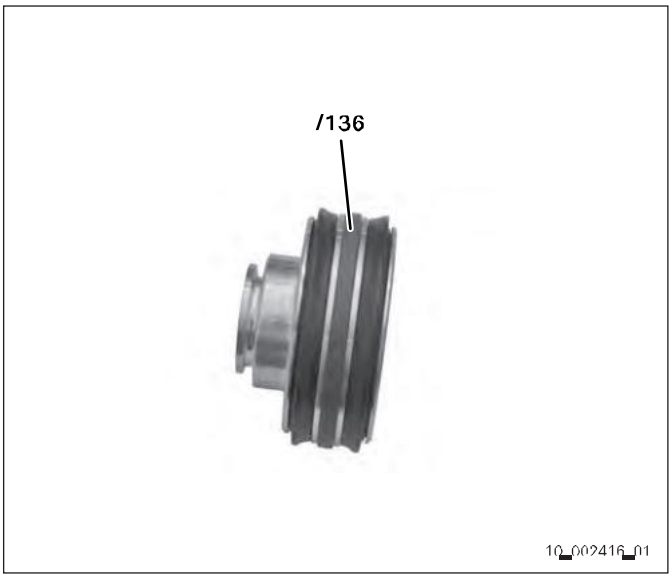

2 Remove grooved rings **(/120, /130)**.

3 Remove supporting ring **(/150)** and securing ring **(/160)**.

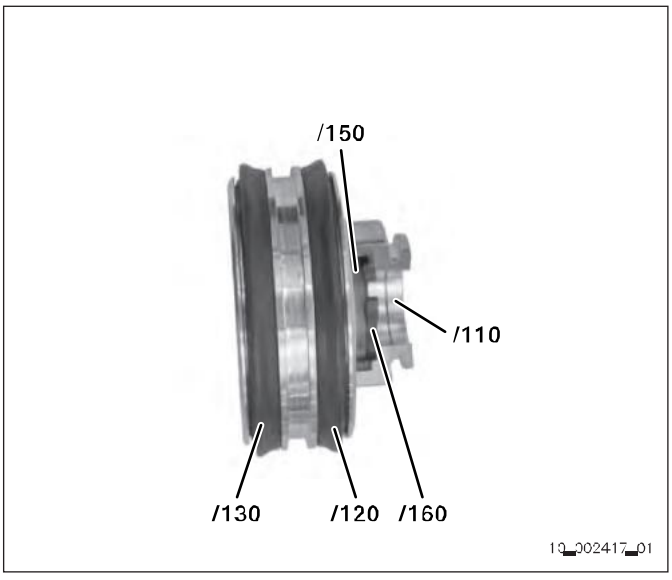

Disassembling the MT piston

06.080 Drag piston with grooved ring
/110 Piston
/120 Grooved ring
/130 Grooved ring
06.090 Drag piston with grooved ring
/110 Piston
/120 Grooved ring
/130 Grooved ring
06.100 MT piston
/110 Piston
/120 O-ring
/130 Supporting ring
/140 Securing ring

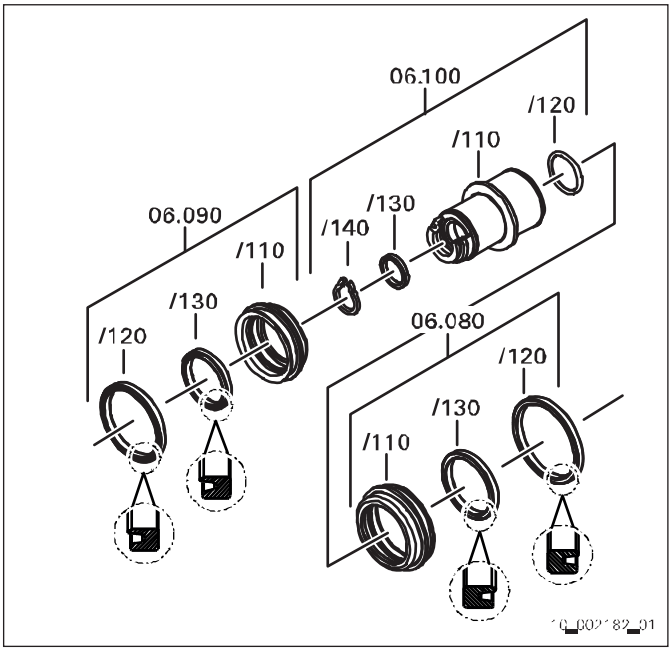

1 Remove grooved rings **(/120, /130)** from drag pistons **06.090**, **06.080**.

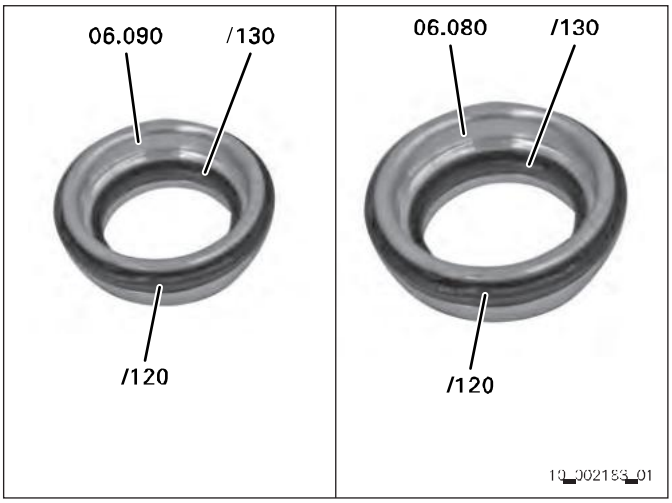

2 Remove securing ring **(/140)**, supporting ring **(/130)** and O-ring **(/120)** from the MT piston **06.100**.

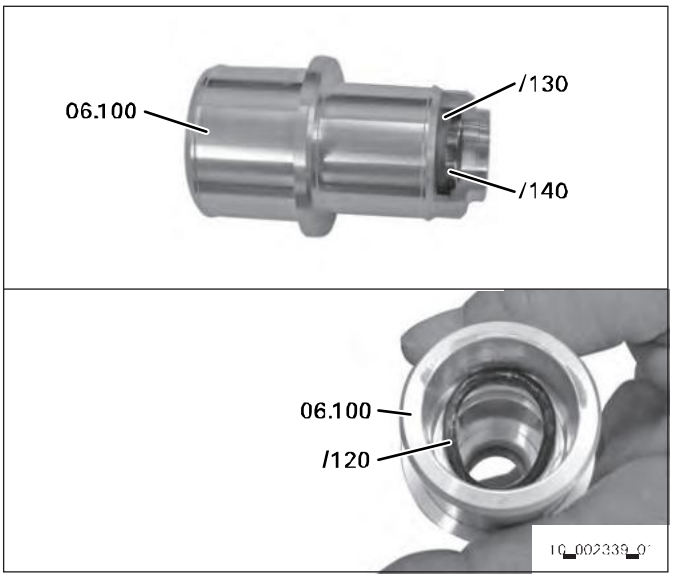

Disassembling the plain bearing (cylinder bottom)

06.110 Plain bearing
/110 Cover
/120 O-ring
/130 O-ring
/140 Plain bearing
/150 Cap-shaped seal

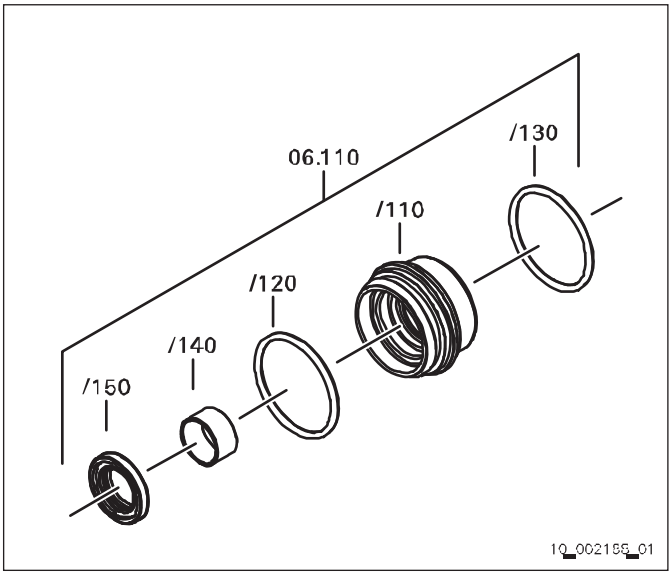

1 Remove O-rings **(/120, /130)**.

2 Remove cap-shaped seal **(/150)** with a suitable plastic punch.

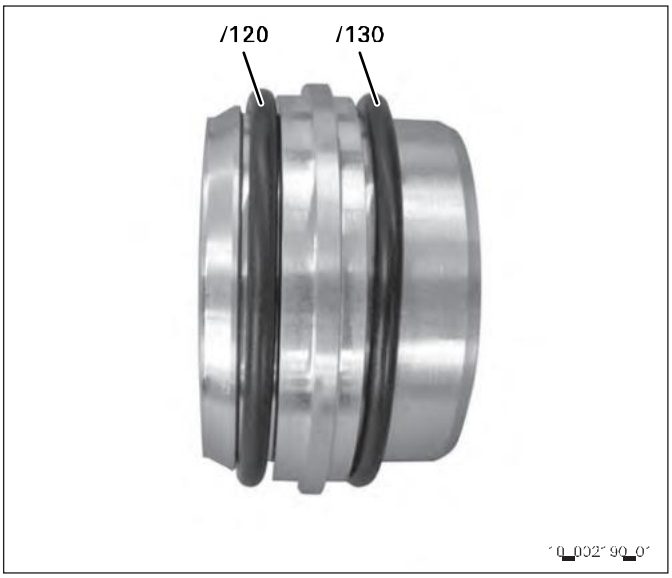

3 If required, press out plain bearing **/140** from the cover **(/110)** using the adapter **1X56.138.741**.

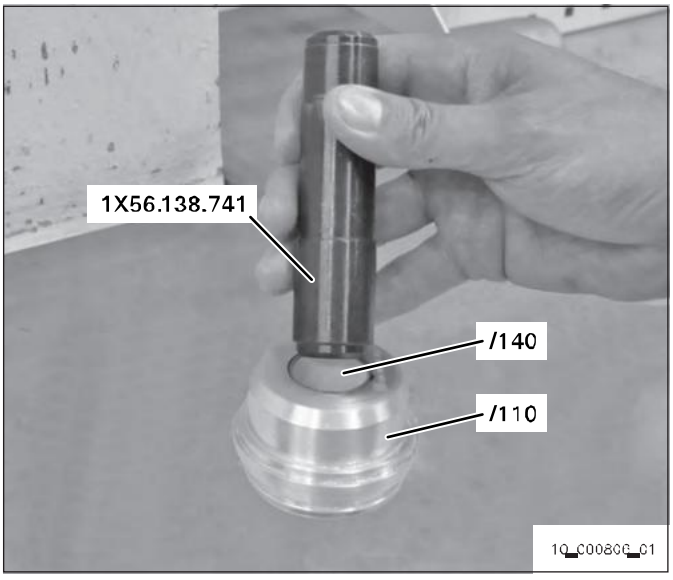

Removing the clutch housing

1 Remove securing ring **02.050**.

2 Use pliers **1X56 138 804** to remove the snap ring **(1)** from the ball bearing **02.030**.

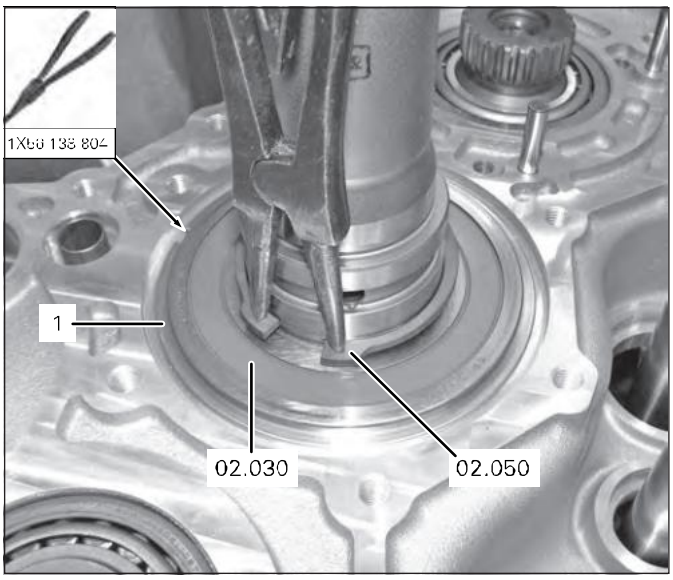

3 Insert extracting device **1X56.138.195** into ring groove of ball bearing **02.030**. Attach basic device **1X56.122.304** to extracting device **1X56.138.195**.
Do not use an impact wrench for extracting the ball bearing.

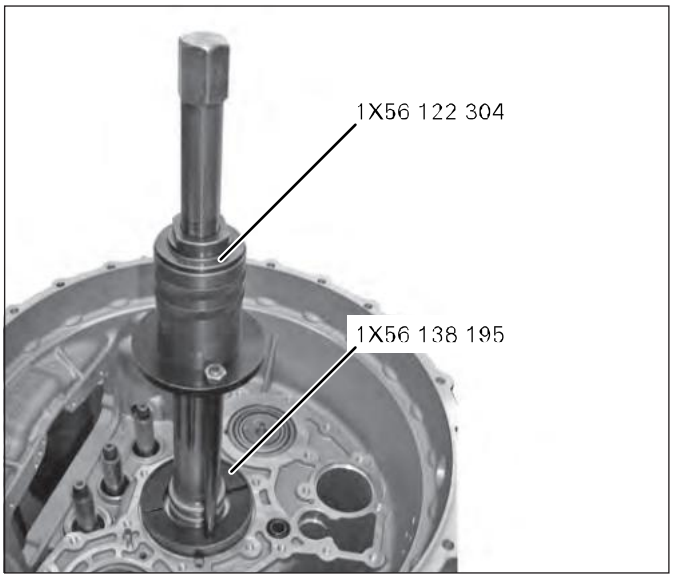

4 Remove cylindrical pin **06.060**.

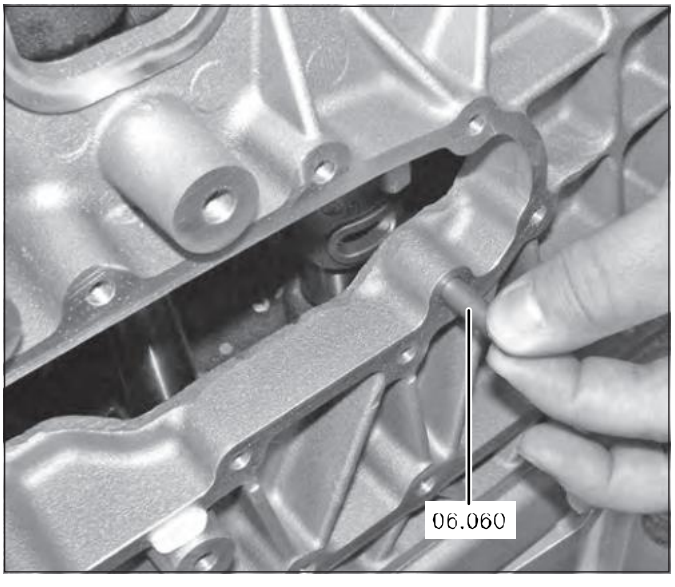

5 Remove all M10 hexagon screws **(2)**.



035/36

6 Attach two eyelet bolts **1T66.159.741** to the clutch housing, avoiding damage to the housing centering device.

7 Hook in chain sling **1T66.160.432**.

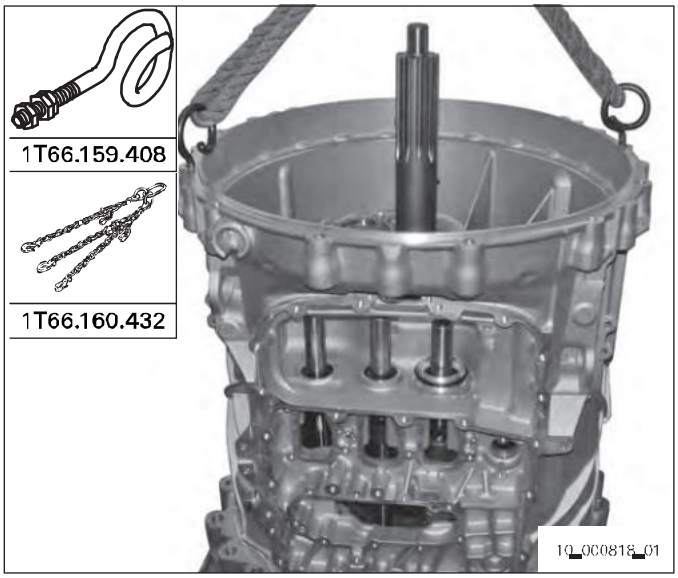

8 When using the assembly fixture **1X56.197.922** remove four clamping shoes **(1)** from the clutch housing.

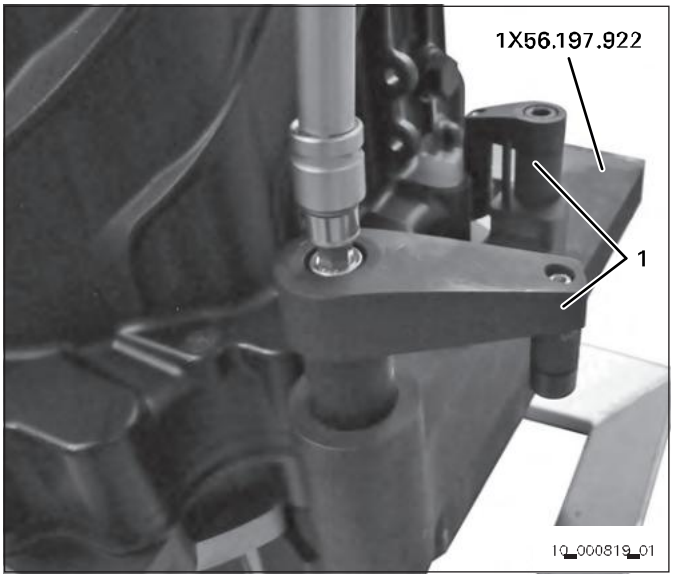

9 Carefully lift clutch housing **01.301** off bearing support **01.071**.

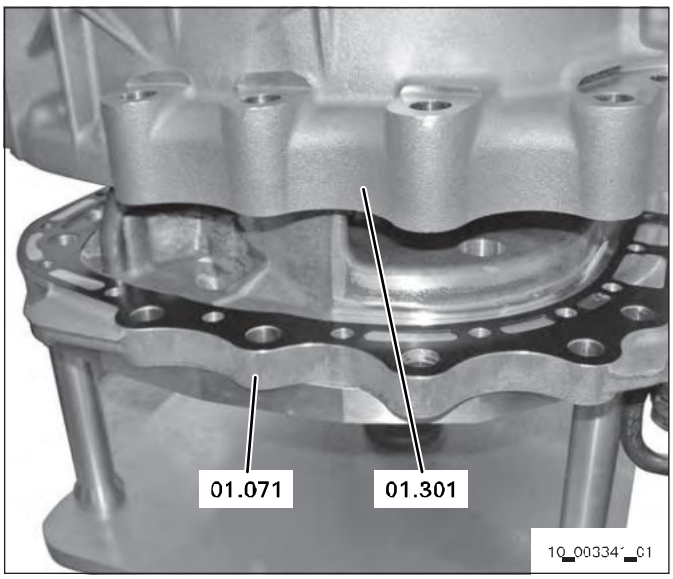

Disassembling the clutch housing

1 Remove seals **10.012, 10.024**.

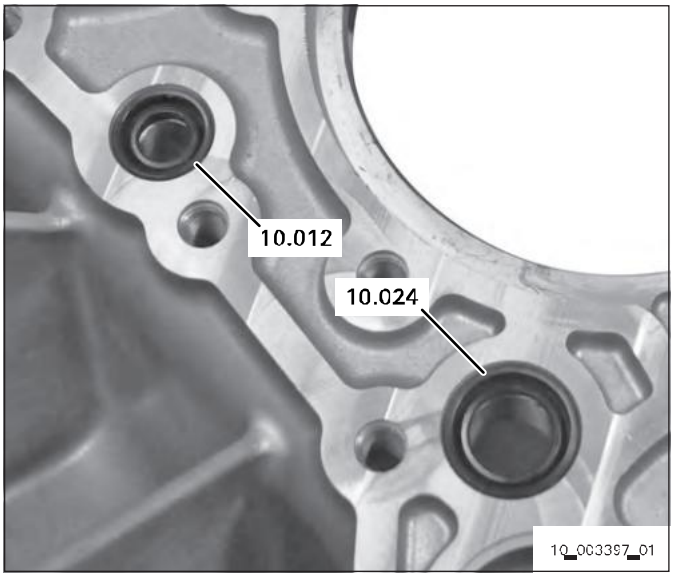

2 Remove the three cylindrical pins **(1) 07.060, 07.070, 07.080** if they are damaged.



3 Press out bearing outer rings of the two ball bearings **03.010, 03.030** from the clutch housing using the tool **1X56.138.738**.

4 Clean all threads.

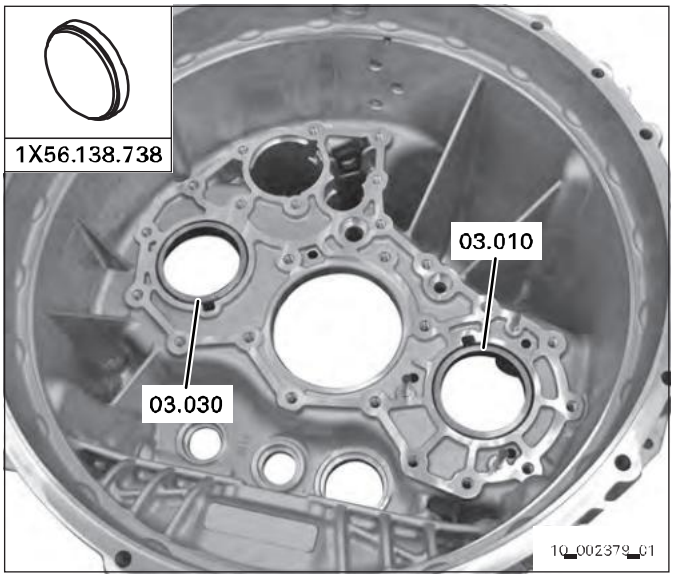

Removing the shaft package

1 Remove injector tubes **10.010** and **10.020**.

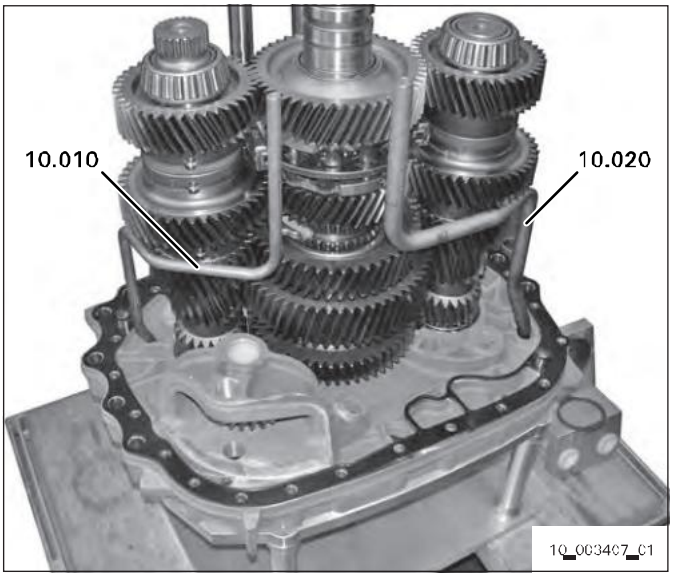

2 Remove both retaining bolts **1X56.138.732**.

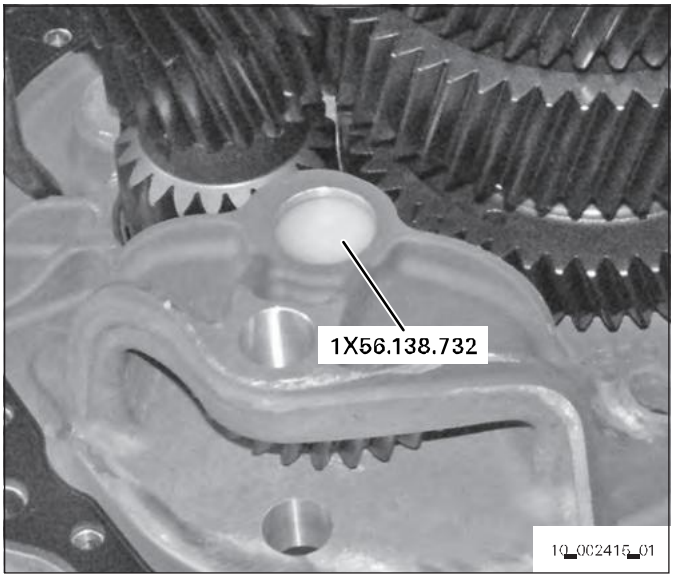

03551_3

3 Take two reverse helical gears **(2) 05.041; 05.051** out of bearing support.
Remove needle rings (needle roller and cage assemblies) **(1) 05.020; 05.040** from the two reverse helical gears.

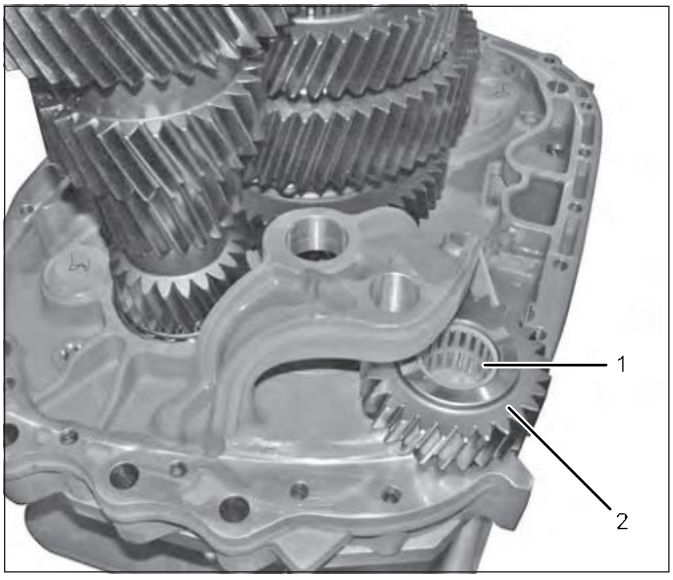

03a 56_1

1358_290
2014-11

4 First rotate the R/C gearshift rail **34.010** clockwise by 90° and then pull it out; otherwise, the detent bolt will get stuck in the shift fork recess.

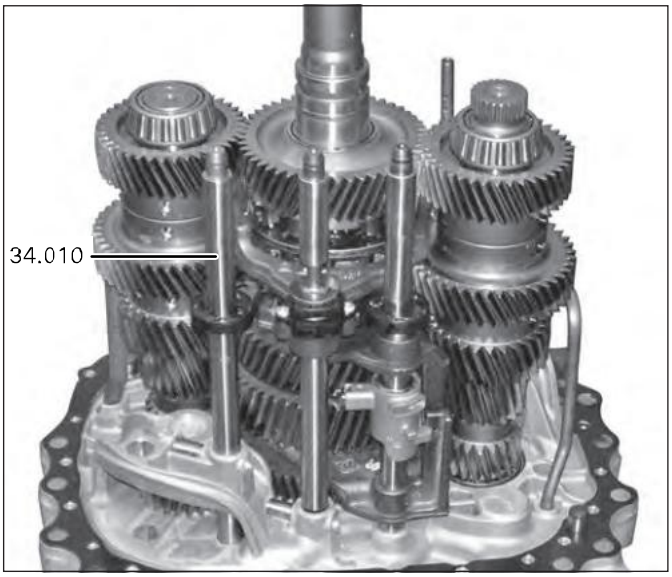

035756_1

5 Place fixture **1X56.138.730** onto the input shaft and secure with securing ring **02.050**.

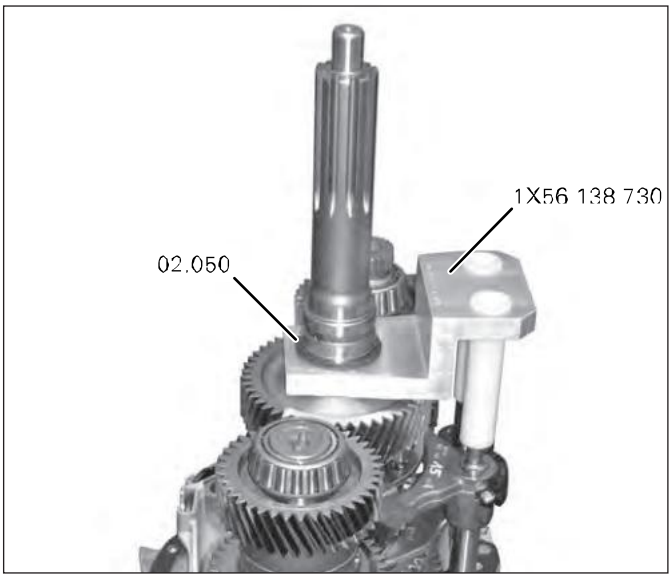

035757_1

6 Screw M12 eyebolt into the countershafts **03.021, 03.031**.

7 Use a hoist to lift the countershafts **03.021, 03.031** out of the bearing support tilting them slightly to the side.

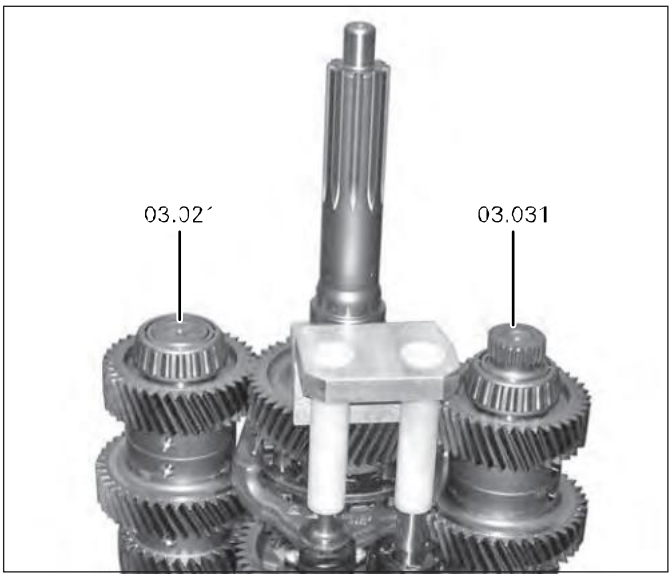

035 60_1

1358_290
2014-11

8 Install the fixture **1X56.138.216** on the input shaft.

The fixture **1X56.138.216** consists of two half-shells, a tube and a threaded part. On one side, place the lugs of the two half-shells into the groove of the input shaft. At the other side, insert the threaded part and put tube on top. Screw in an M10 eyebolt at the threaded part of the fixture **1X56.138.216**.

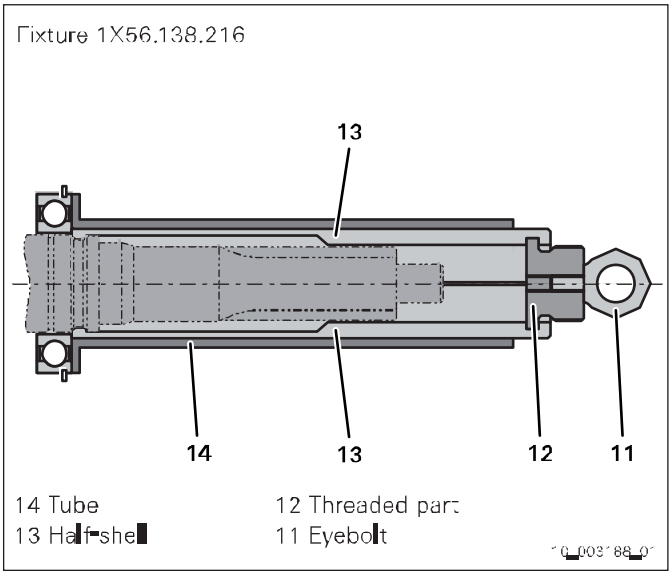

9 Hook chain sling **1T66 160 432** into the eyebolt.

10 Use the hoist to lift the input and main shafts; the gearshift rails must be released from the locking sleeves. Put main shaft on assembly aid **1X56 138 196** or clamp into a vise with protective chucks.

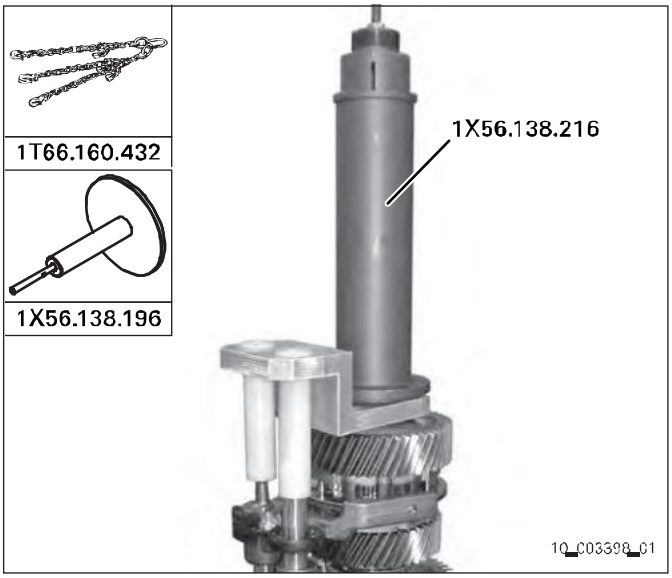

11 Model ranges 12.1 and 12.2
Push sleeve **(16)** upwards and take off shift fork **12.010**. Push sleeve **(17)** upwards and completely take off gearshift rail **06.010** with shift forks.

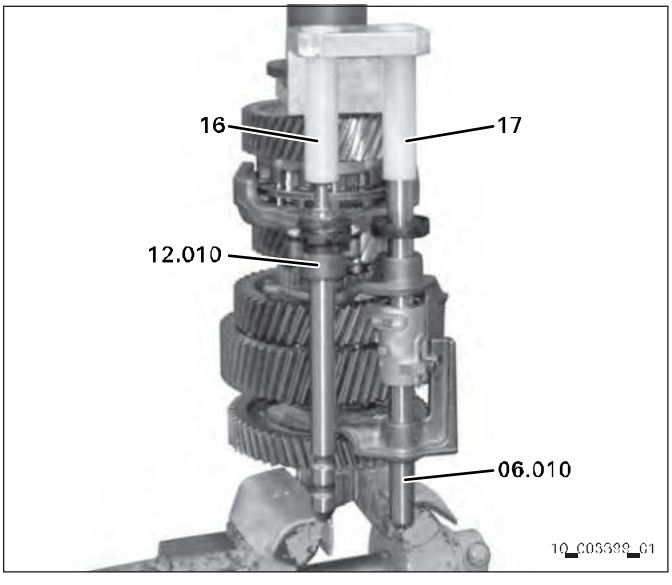

12-speed

Model range 16
Push sleeve **(16)** upwards and take offshift fork **12.010**. Push sleeve **(17)** upwards, hold sliding sleeve **04.042** and completely take off gearshift rail **06.010** with shift forks.

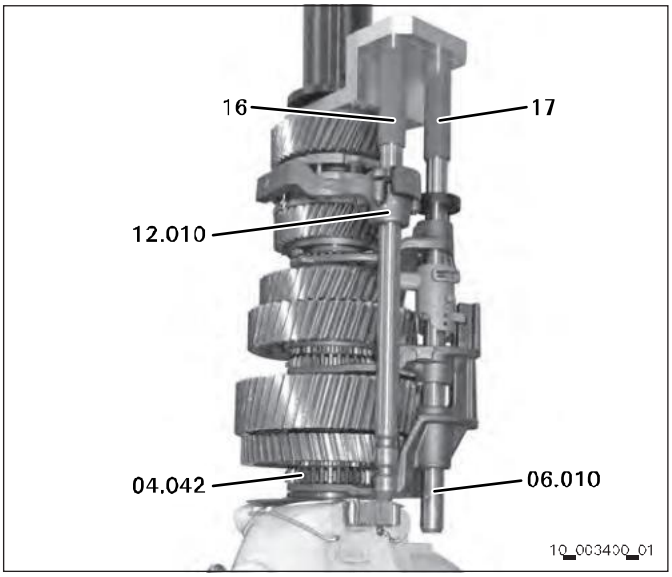

16-speed

12 Push the sliding sleeve **04.160** towards the output. Now, the securing ring becomes visible.

13 Use pliers **1X56.138.728** to contract the securing ring and use a hoist to lift off the input shaft from the main shaft.

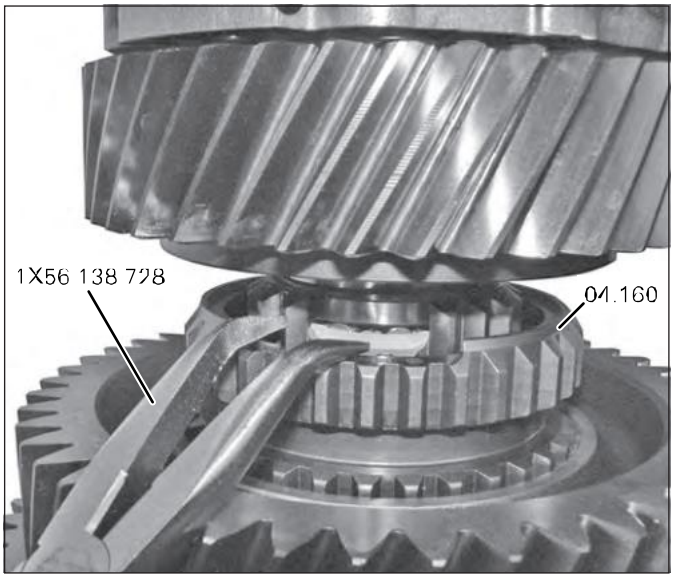

Dismantle input shaft *(refer to Chapter Input Shaft)*.

Dismantle main shaft *(refer to Chapter Main Shaft)*.



Disassembling the countershaft

To protect the countershafts **03.021** and **03.031** use a thrust piece to extract the bearing inner rings.

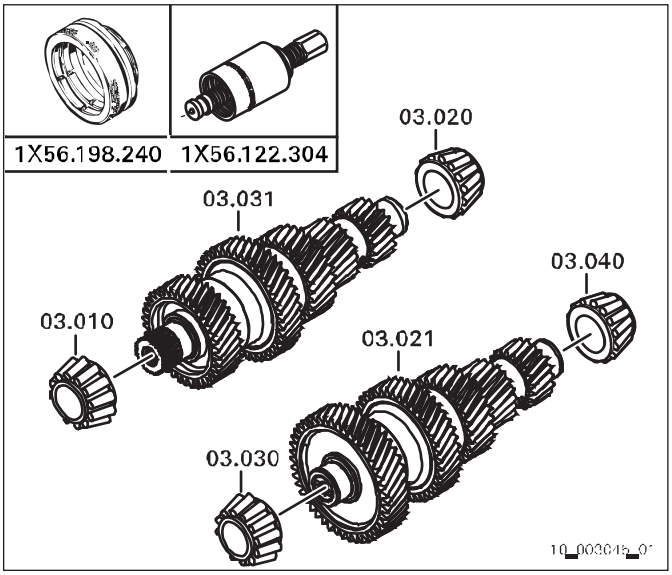

12-speed

Model ranges 12.1 and 12.2

1 Use a gripping device **1X56.198.240** to grab the bearing inner rings of the ball bearings **03.010, 03.020, 03.030, 03.040**.

2 Put thrust piece between basic device and countershaft.

3 Screw basic device **1X56.122.304** onto gripping device **1X56.198.240** and extract the bearing inner ring.

It is not possible to further disassemble the countershaft. If a gearing is damaged, both countershafts must be replaced.



12-speed 035753

Model range 16

1 Use a gripping device **1X56.198.240** to grab the bearing inner rings of the ball bearings **03.010, 03.030**.

2 Put thrust piece between basic device and countershaft.

3 Screw basic device **1X56.122.304** onto gripping device **1X56.198.240** and extract the bearing inner ring.

4 Use a gripping device **1X56.136.757** to grab the bearing inner rings of the ball bearings **03.020, 03.040**.

5 Put thrust piece between basic device and countershaft.

6 Screw basic device **1X56.122.304** onto gripping device **1X56.136.757** and extract the bearing inner ring.

It is not possible to further disassemble the countershaft. If a gearing is damaged, both countershafts must be replaced.

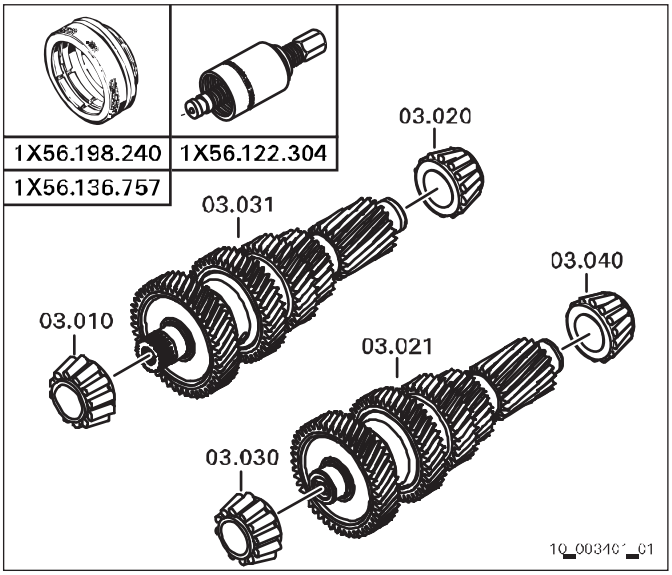

16-speed



16-speed 035751

Disassembling the input shaft

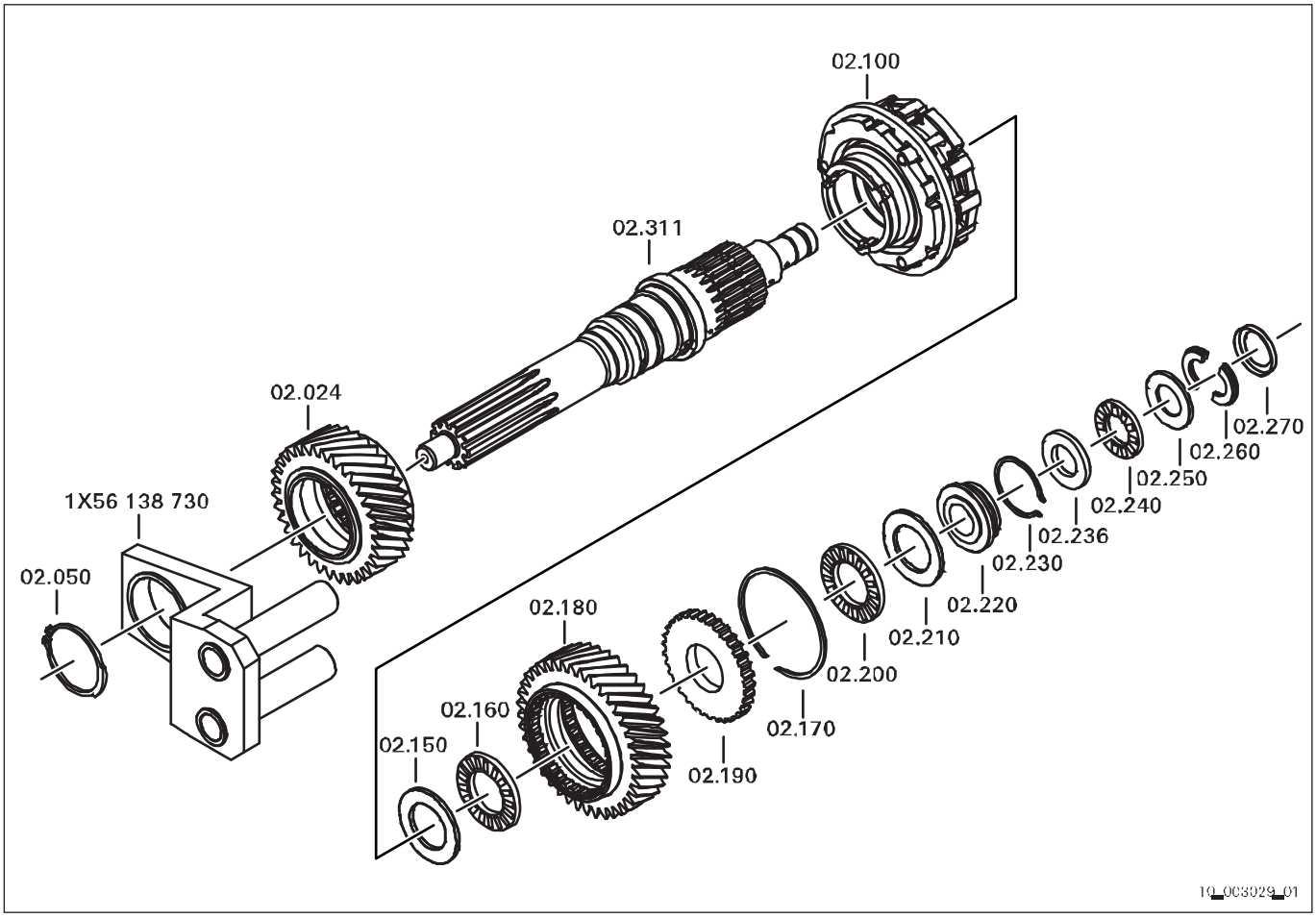

02.024 Helical gear [constant 1]
02.050 Securing ring
02.100 S/G synchronizer unit
02.150 Washer
02.160 Axial roller cage
02.170 Snap ring
02.180 Helical gear [constant 2]
02.190 Bearing washer
02.200 Axial roller cage
02.210 Washer
02.220 Bearing ring
02.230 Locking ring
02.236 Shaft washer
02.240 Axial roller cage
02.250 Washer
02.260 Split ring
02.270 Securing ring
02.311 Input shaft

1 Remove fixture **1X56.138.216**.



2 Remove securing ring **02.050** and fixture **1X56.138.730**.

3 Remove helical gear constant 1 **02.024** from the input shaft.

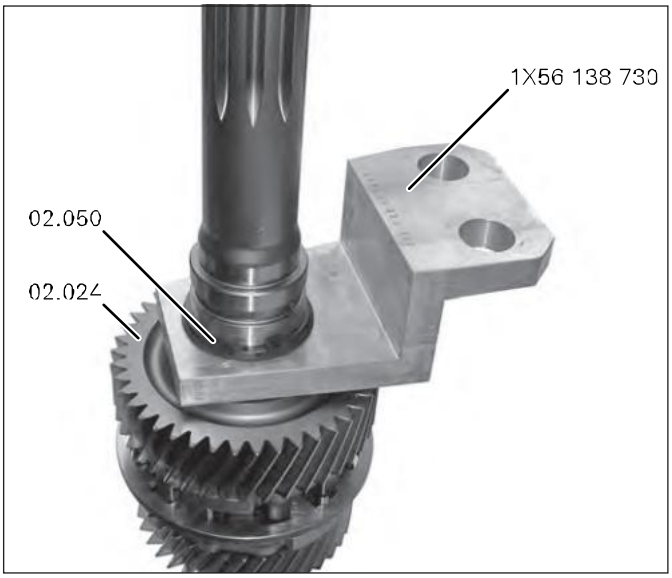

⚠ CAUTION

Risk of injury due to parts under spring tension.
Slight to moderate injury possible.
⇨ Wear protective goggles.

Cylindrical rollers and compression springs might jump out of the synchronizer unit due to improper handling.

4 Turn input shaft by 180° and clamp into a vise with protective chucks.

5

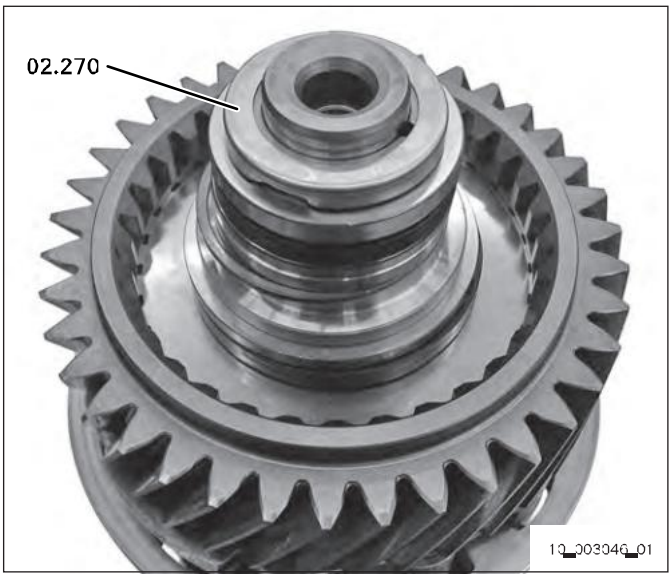

⚠ CAUTION

Risk of injury due to parts flying away.
Slight to moderate injury possible.
⇨ Wear protective goggles.

Metal splinters are chipped off when working with a chisel.
Destroy securing ring **02.270** with a chisel and remove it.

6 Remove split ring **02.260**.

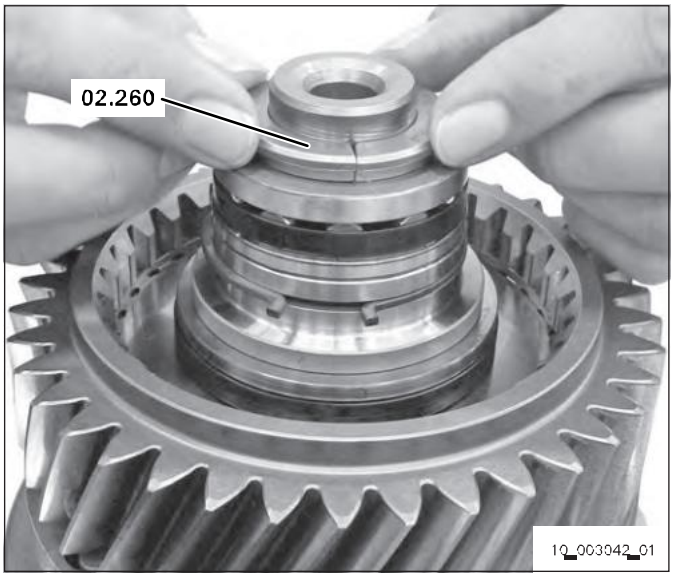

7 Remove washer **02.250**.

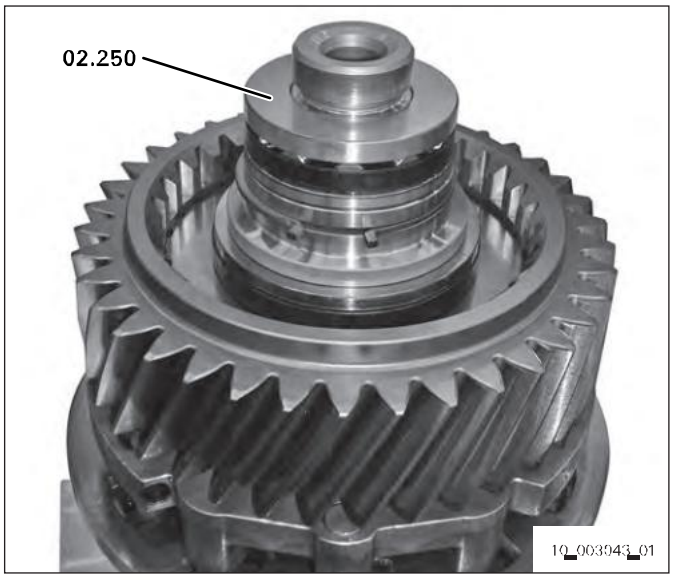

8 Remove axial roller cage **02.240**.

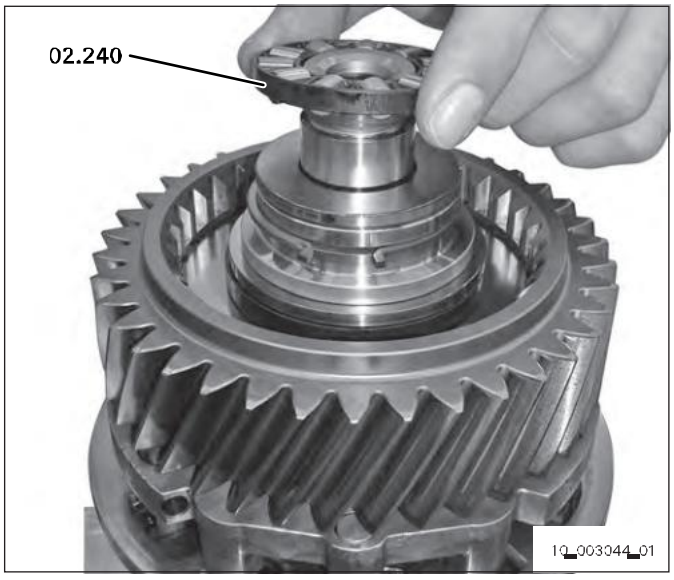

9 Remove shaft washer **02.236**.

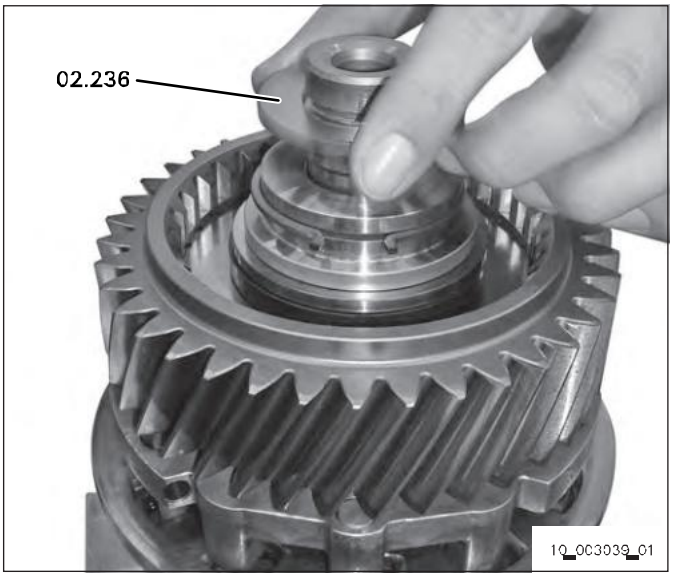

10 Remove bearing ring **02.220**. If required, remove securing ring **02.230** from bearing ring.

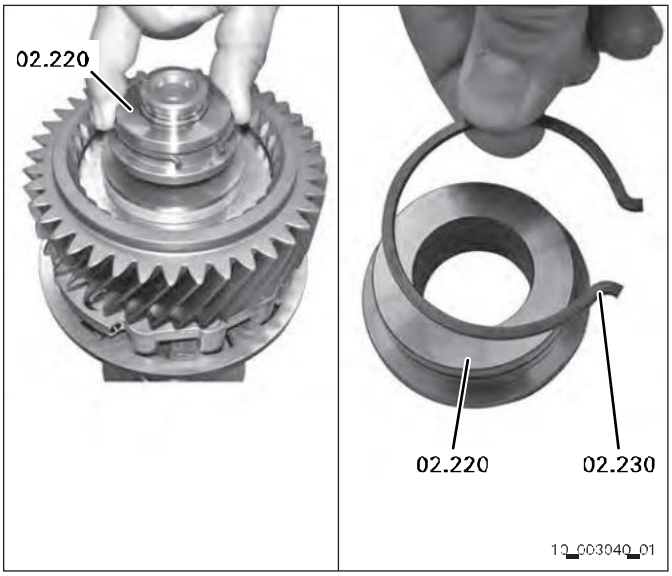

11 Remove washer **02.210**.

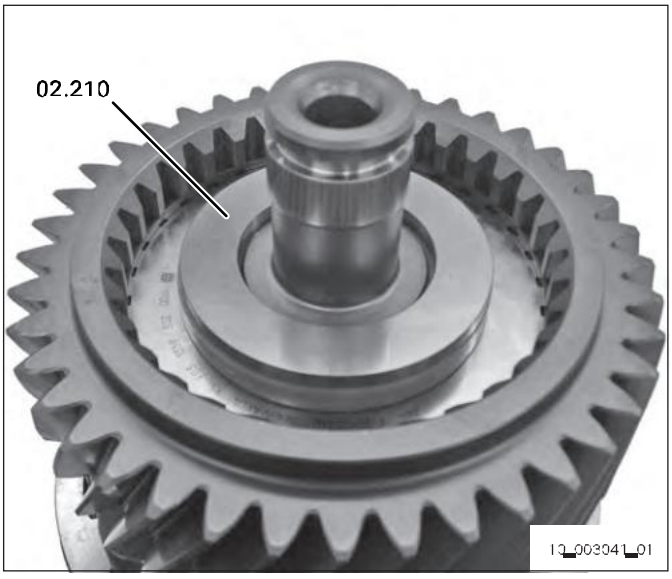

12 Remove axial roller cage **02.200**.

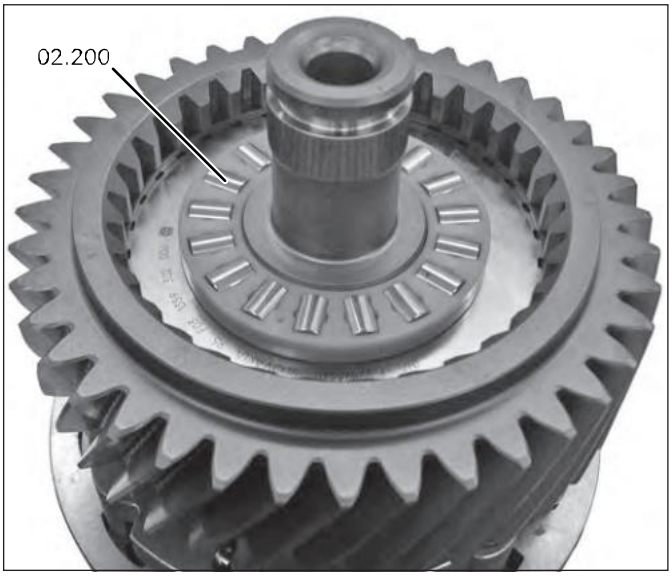

13 Remove helical gear constant 2 **02.180**.



14 If required, disassemble helical gear constant 2.
Unsnap snap ring **02.170** and remove bearing washer **02.190**.

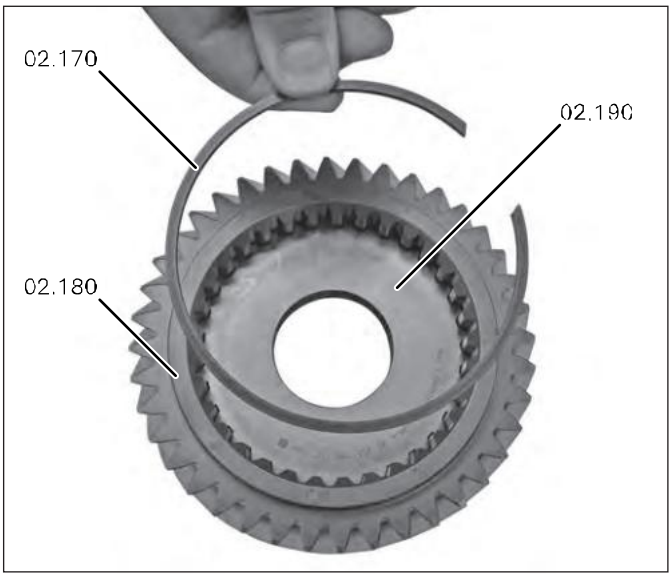

15 Remove axial roller cage **02.160**.

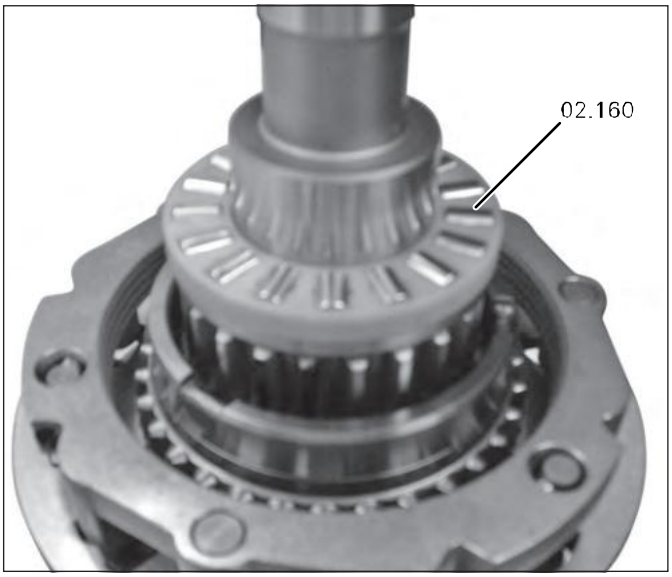

03s964_1

16 Remove washer **02.150**.

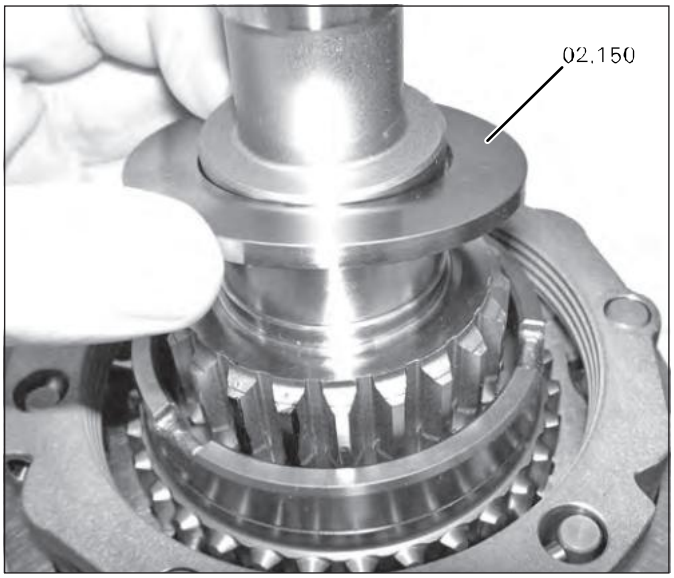

03s963_1

17 Completely remove synchronizer unit **02.100** from the input shaft.

⚠ CAUTION

Risk of injury due to parts under spring tension.
Slight to moderate injury possible.
⇨ Wear protective goggles.

Cylindrical rollers and compression springs might jump out of the synchronizer unit due to improper handling.



03s979

Disassembling the synchronizer unit

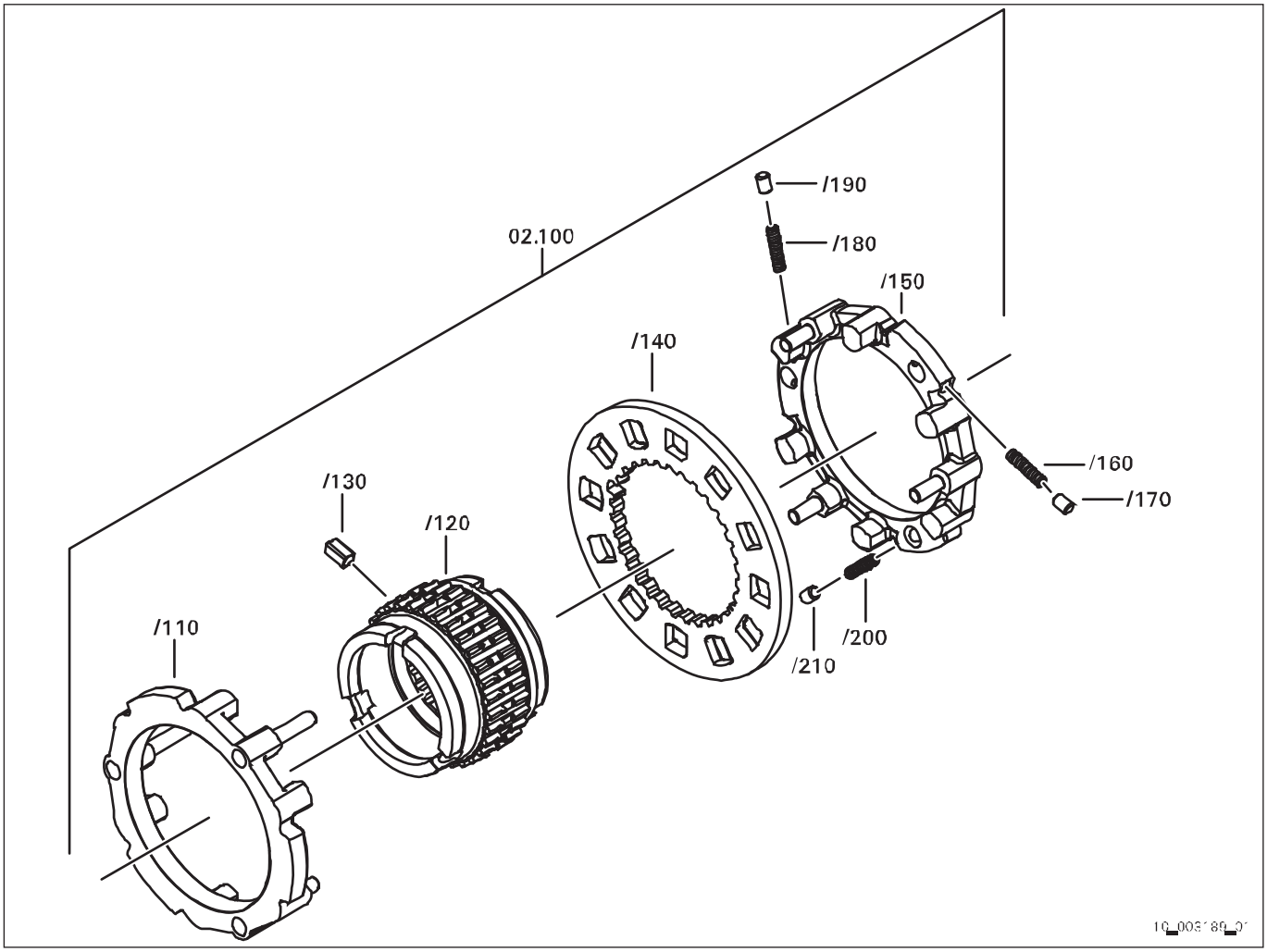

Version: Direct drive

02.100 Synchronizer unit
/110 Synchronizer ring constant 1 [K1]
/120 Sliding sleeve
/130 Bolt
/140 Plate
/150 Synchronizer ring constant 2 [K2]
/160 Compression spring
/170 Cylindrical roller
/180 Compression spring
/190 Cylindrical roller
/200 Compression spring
/210 Cylindrical roller

⚠ CAUTION

Risk of injury due to parts under spring tension.
Slight to moderate injury possible.
⇨ Wear protective goggles.

A compression spring and a cylindrical roller jump out of each of the three bores.

1 Put synchronizer unit **02.100** on a table with the frontal bores (see arrow) facing upwards. Cover with a cloth.
Carefully pull off K2 synchronizer ring **/150**. Compression springs **/160, /180, /200** and cylindrical rollers **/170, /190, /210** will jump out.

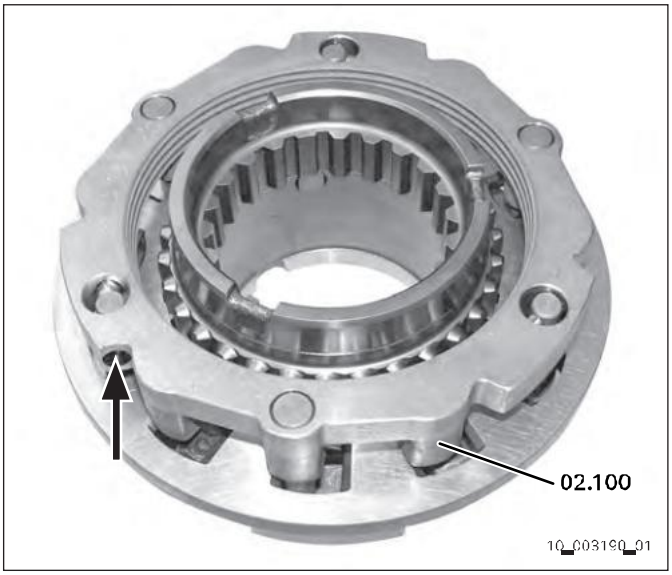

2 Push bolt **/130** inwards through the sliding sleeve **/120**. Offset plate **/140** by half a tooth and remove it from the sliding sleeve **/120**.

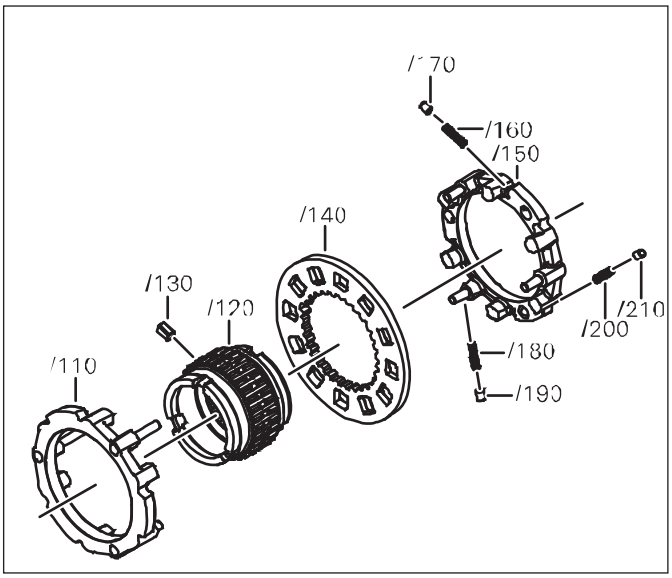

Version: Overdrive 035387_2

Disassembling the main shaft, 12-speed, model range 12.1

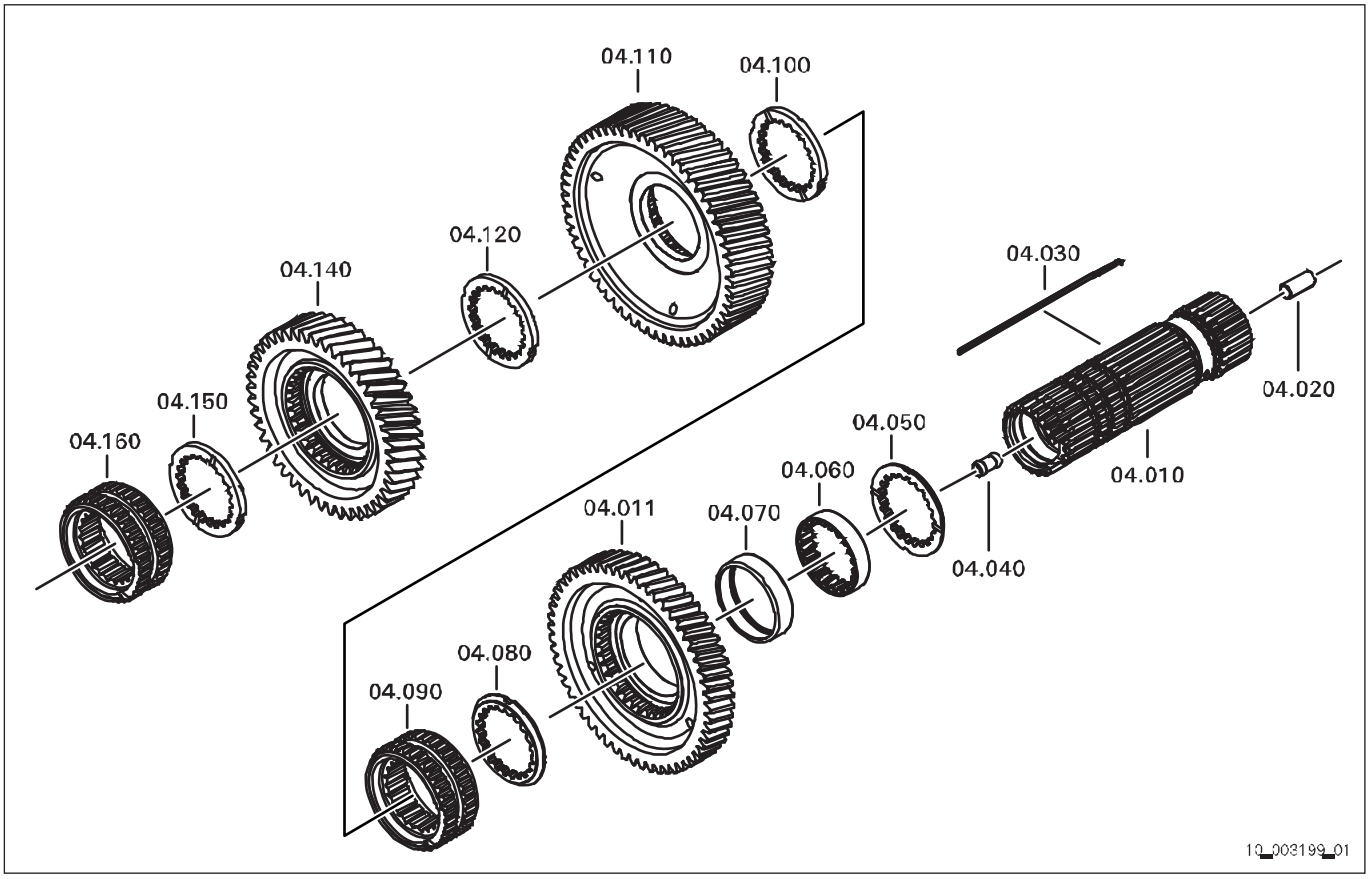

04.010 Main shaft (1)
04.011 R gear helical gear (2)
04.020 Oil tube (3)
04.030 Spline (4)
04.040 Oil tube (5)
04.050 Washer with chamfer (14)
04.060 Ring (7)
04.070 Slide ring (8)
04.080 Washer with chamfer (14)
04.090 Sliding sleeve (10)
04.100 Washer (6)
04.110 Helical gear 1st gear (11)
04.120 Washer (6)
04.140 Helical gear 2nd gear (12)
04.150 Washer (6)
04.160 Sliding sleeve (13)

The main shaft components differ for model ranges 12.1, 12.2 and 16.

Each model range is available as direct drive and overdrive version.

1 Clamp main shaft in a vise with protective chucks.

2 Press spline **(4)** out of the bore (e. g. with a small screwdriver) and pull downwards. Secure the last helical gear **(2)** with the spline.

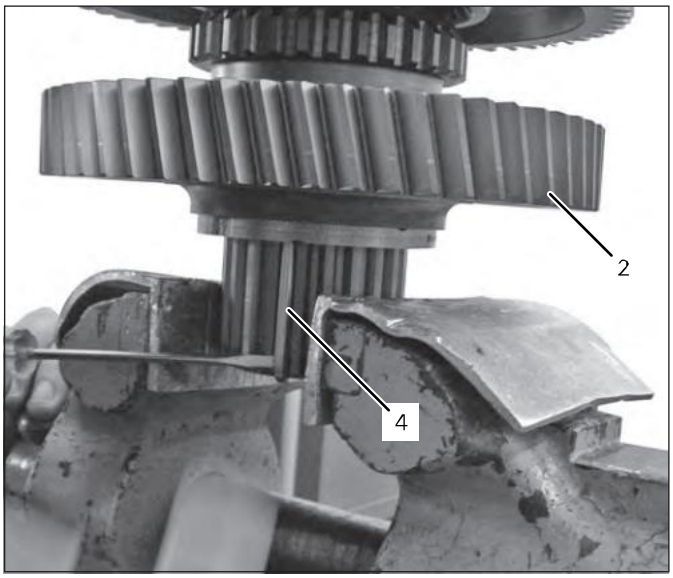

03587

3 Remove oil tube **(5)**.



03588

4 Remove sliding sleeve **(13)**.

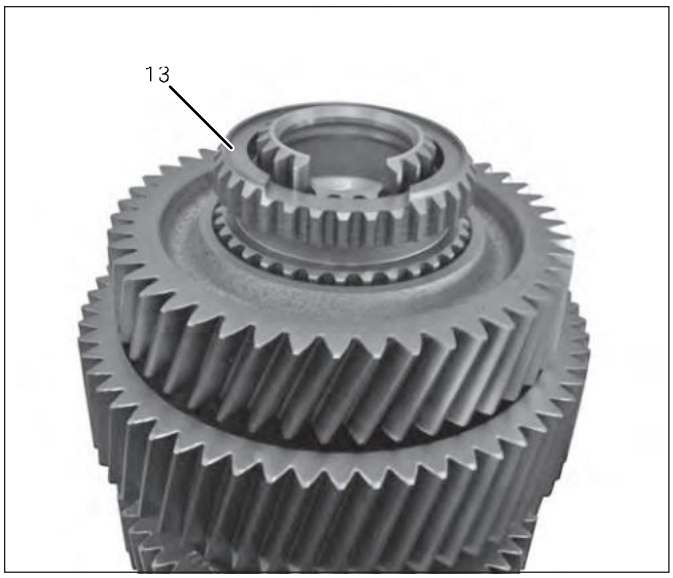

03589

1358_210
2017-05

5 Offset washer **(6)** by half a tooth and take it off.

6 Take off helical gear 2nd gear **(12)**.

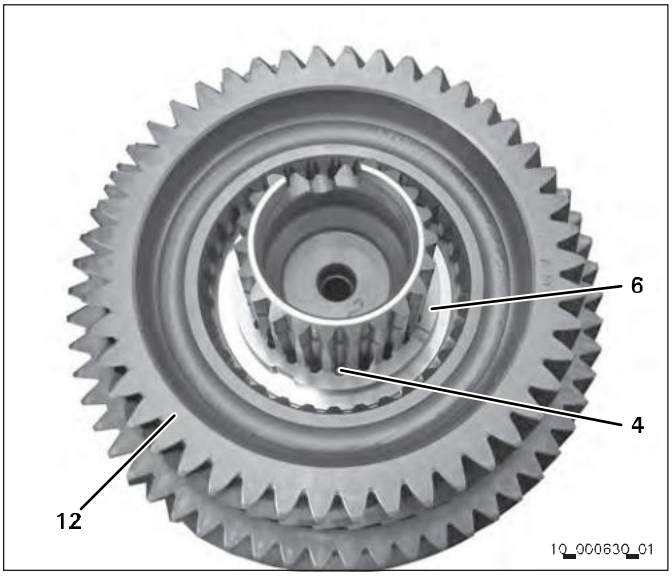

7 Offset washer **(6)** by half a tooth and take it off.

8 Take off helical gear 1st gear **(11)**.

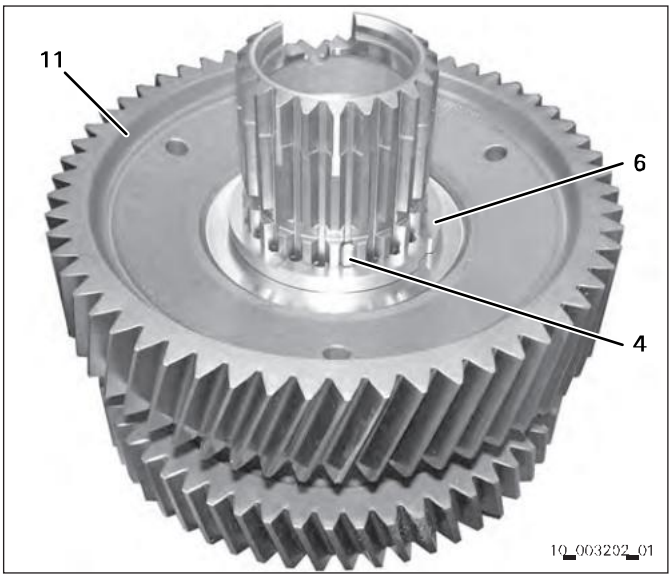

9 Remove washer **(6)**.

10 Remove sliding sleeve **(10)**.

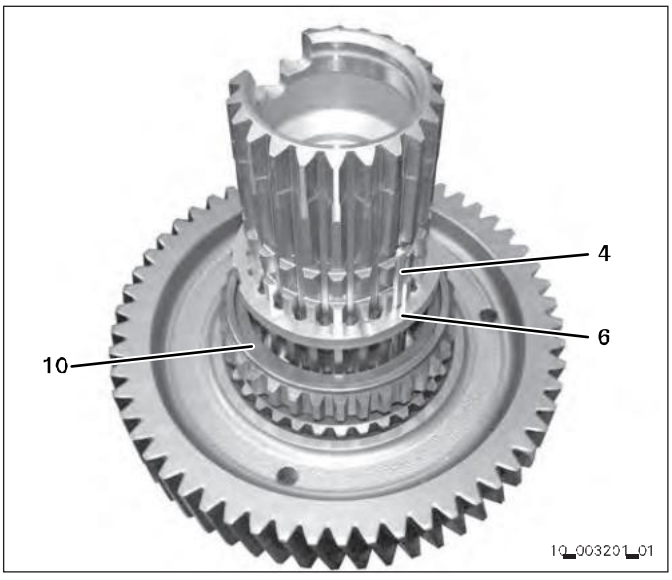

11 Offset washer with chamfer **(14)** by half a tooth and take it off.

12 Take off reverse gear helical gear **(2)**.

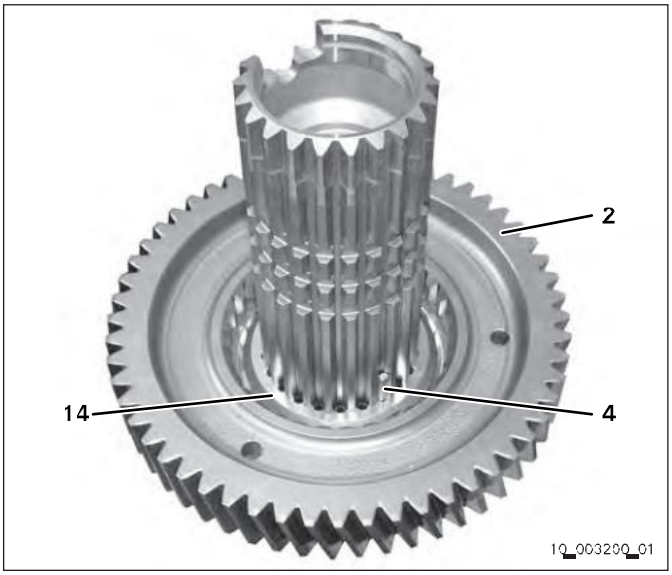

13 Remove spline **(4)**.

14 Offset washer with chamfer **(14)** by half a tooth and take it off.

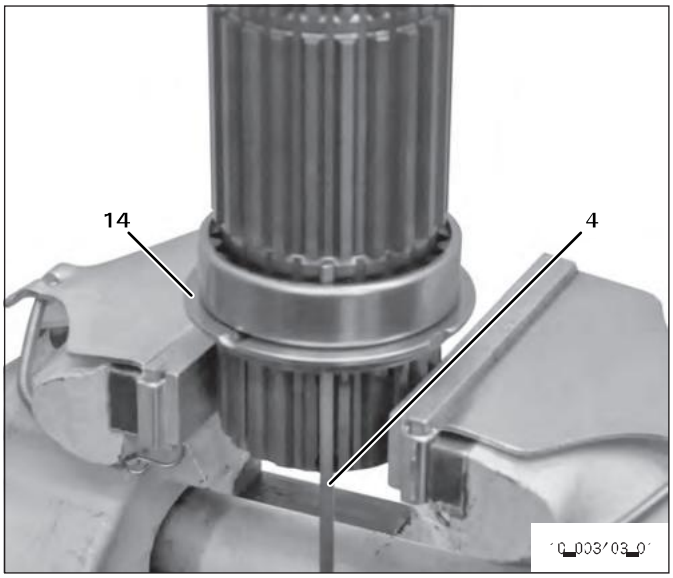

15 Remove slide ring **(8)**; if required, press it off the main shaft with a suitable tube.

16 Remove oil tube **(3)**, if damaged.

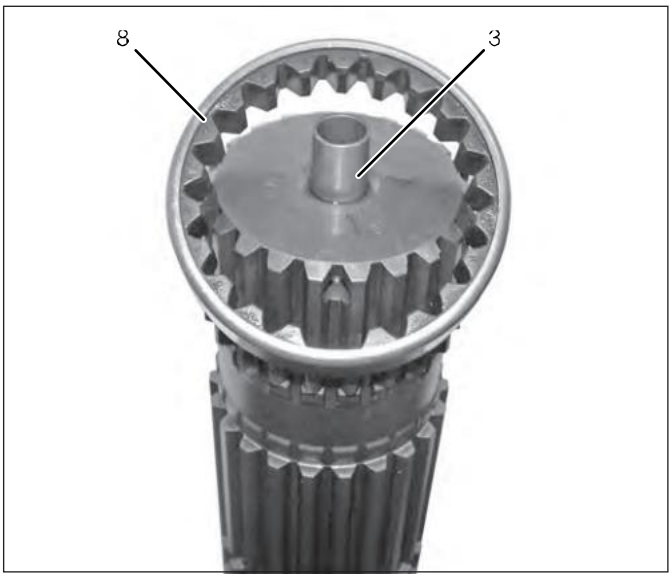

Disassembling the main shaft, 12-speed, model range 12.2

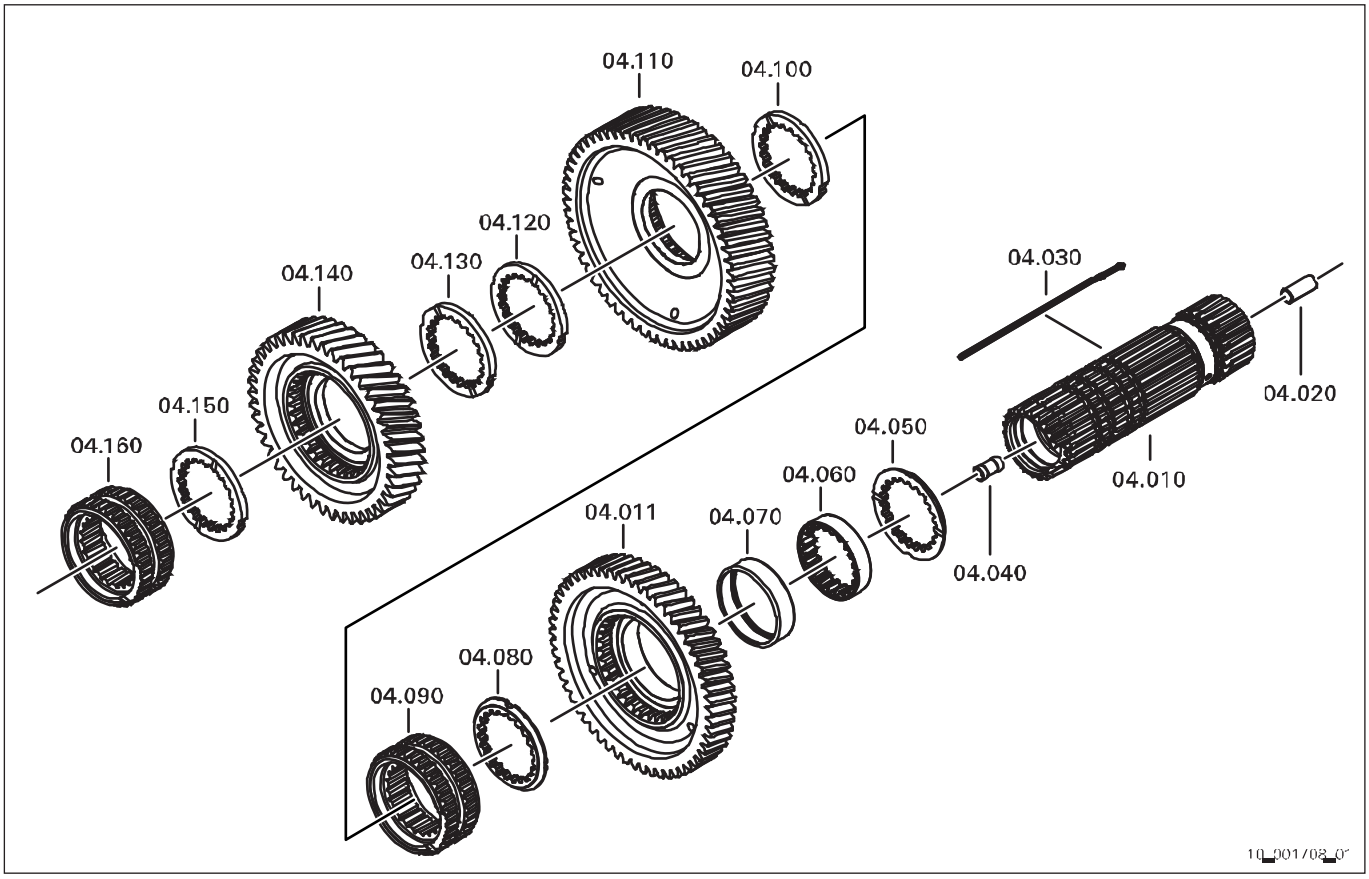

04.010 Main shaft (1)
04.011 R gear helical gear (2)
04.020 Oil tube (3)
04.030 Spline (4)
04.040 Oil tube (5)
04.050 Washer (14) with chamfer
04.060 Ring (7)
04.070 Slide ring (8)
04.080 Washer (14) with chamfer
04.090 Sliding sleeve (10)
04.100 Washer (6)
04.110 Helical gear 1st gear (11)
04.120 Variable washer (9)
04.130 Washer (6)
04.140 Helical gear 2nd gear (12)
04.150 Variable washer (9)
04.160 Sliding sleeve (13)

The main shaft components differ for model ranges 12.1, 12.2 and 16.

Each model range is available as direct drive and overdrive version.

Installation note
Label variable washers so that they can be assigned to the correct assembly location during assembly. Thus, the measurement process is implemented for control purposes only.

Washer **04.130** is not used for model range 12.1.

1 Clamp main shaft in a vise with protective chucks.

2 Press spline **(4)** out of the bore (e. g. with a small screwdriver) and pull downwards. Secure the last helical gear **(2)** with the spline.

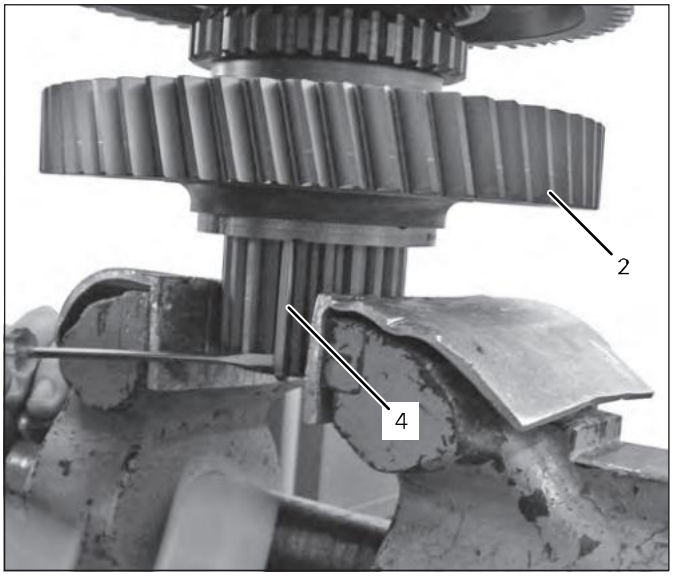

3 Remove oil tube **(5)**.



4 Remove sliding sleeve **(13)**.

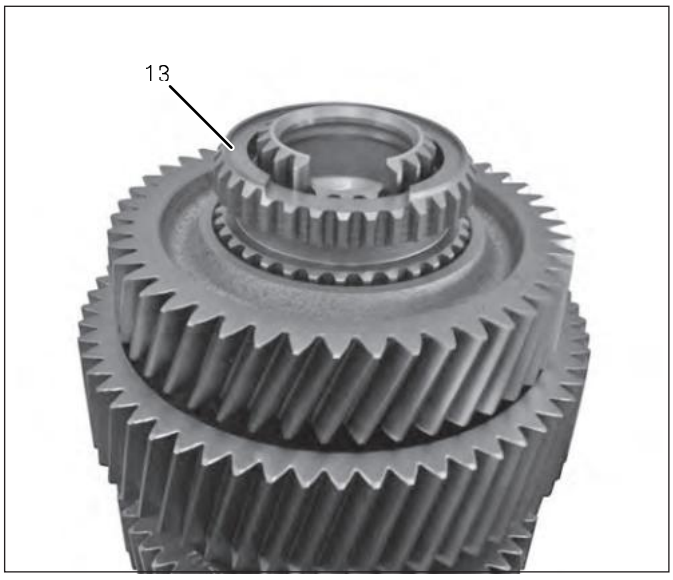

5 Offset variable washer **(9)** by half a tooth and take it off.

6 Take off helical gear 2nd gear **(12)**.

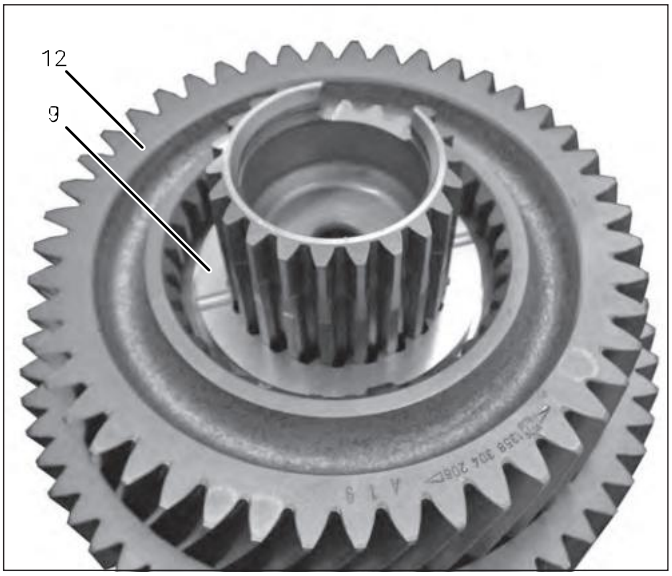

03ac20

7 Offset washer **(6)** and variable washer **(9)** by half a tooth and take them off.

8 Take off helical gear 1st gear **(11)**.

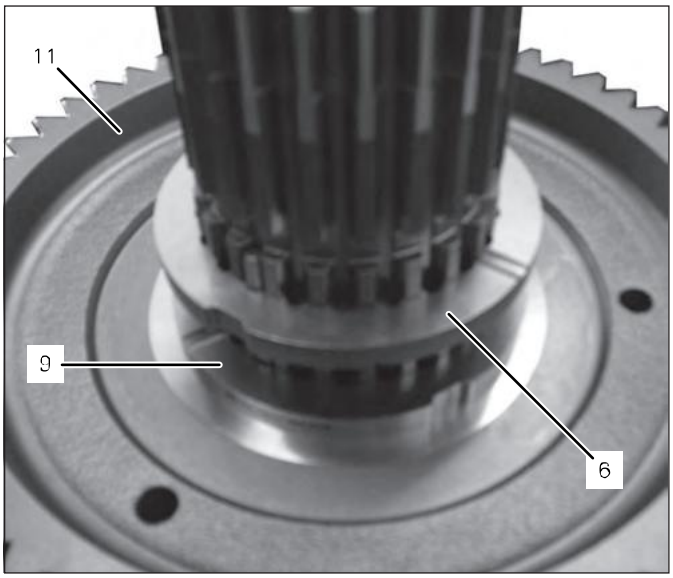

03ac21

9 Remove washer **(6)**.

10 Remove sliding sleeve **(10)**.

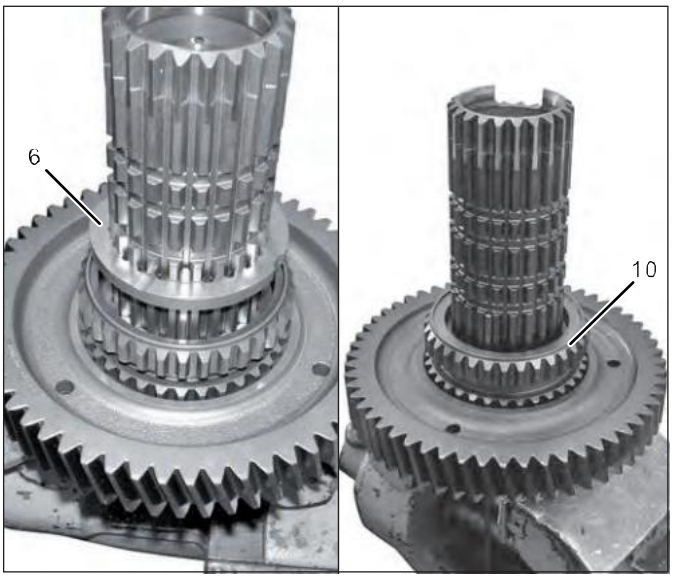

03ac22

11 Offset washer with chamfer **(14)** by half a tooth and take it off.

12 Take off reverse gear helical gear **(2)**.

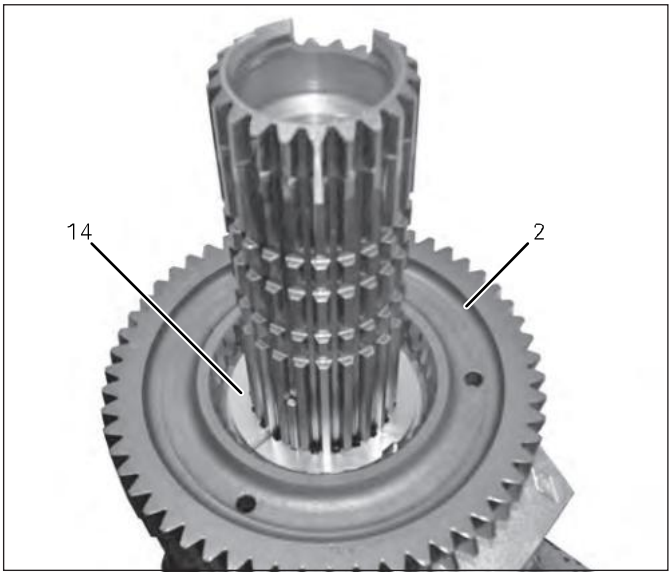

13 Remove spline **(4)**.

14 Offset washer with chamfer **(14)** by half a tooth and take it off.

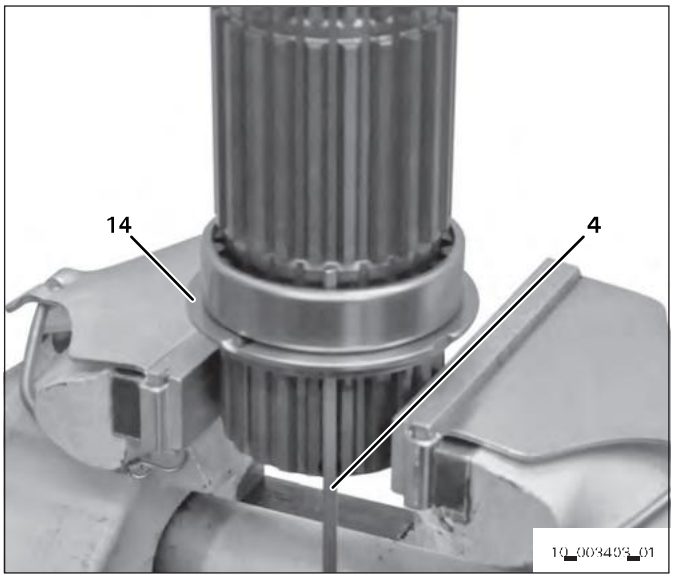

15 Remove slide ring **(8)**; if required, press it off the main shaft with a suitable tube.

16 Remove oil tube **(3)**, if damaged.

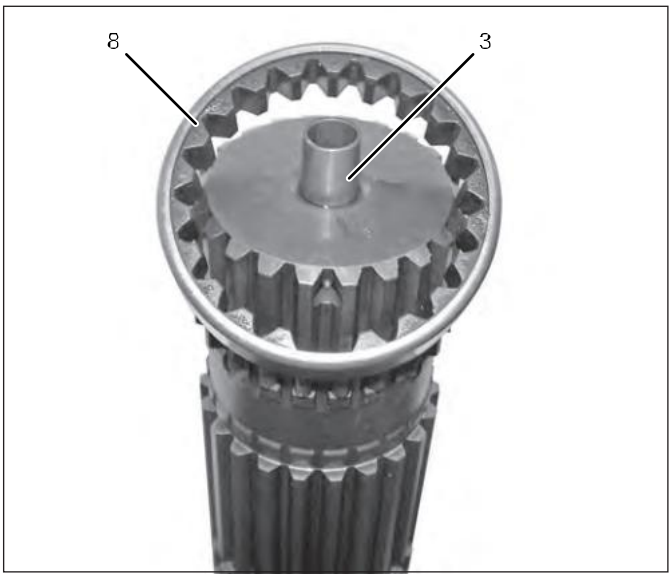

Disassembling the main shaft, 16-speed

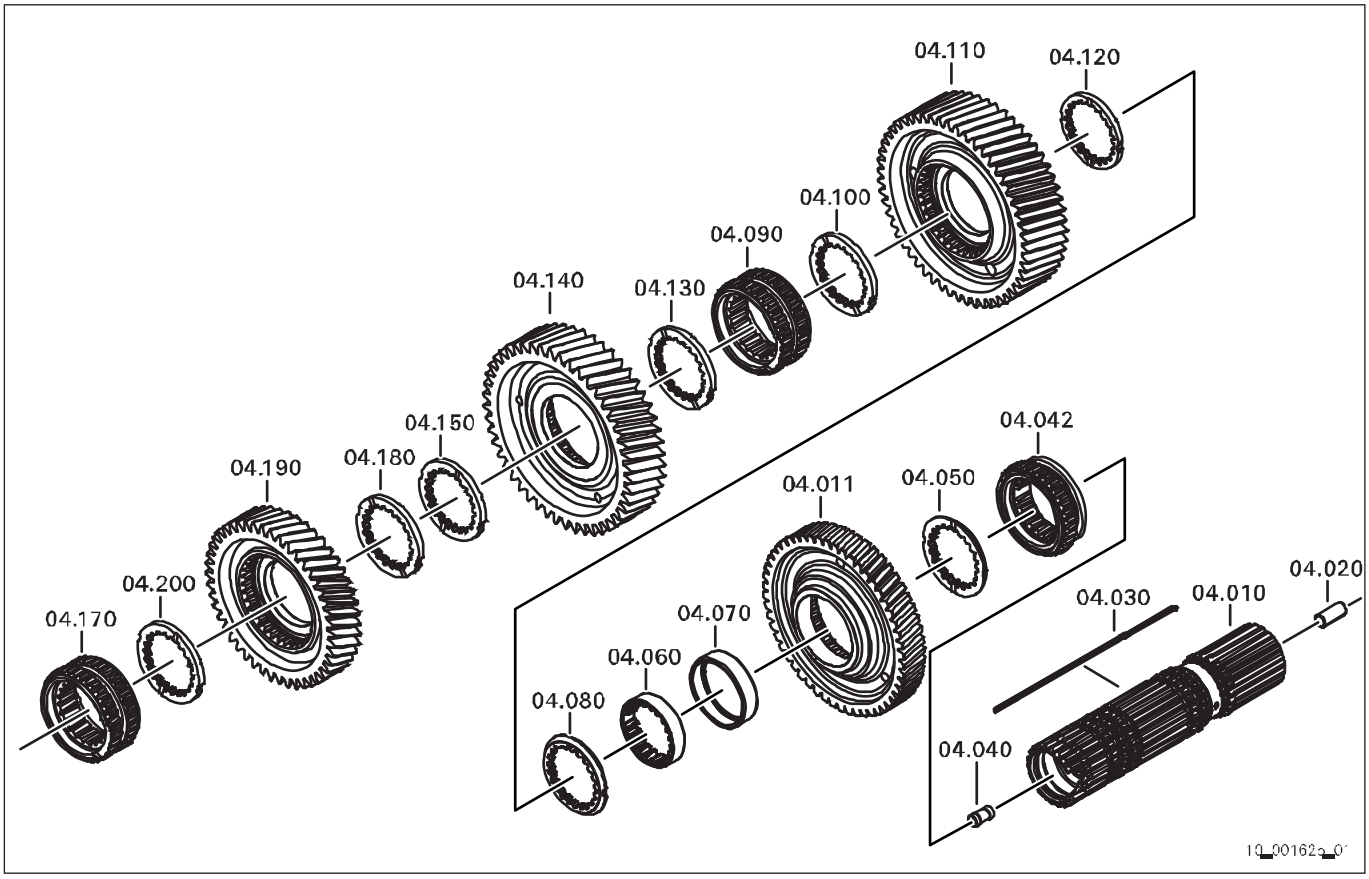

04.010 Main shaft
04.011 R gear helical gear
04.020 Oil tube
04.030 Spline
04.040 Oil tube
04.042 Sliding sleeve
04.050 Washer with chamfer
04.060 Ring
04.070 Slide ring
04.080 Washer with chamfer
04.090 Sliding sleeve
04.100 Washer
04.110 Helical gear 1st gear
04.120 Variable washer
04.130 Washer
04.140 Helical gear 2nd gear
04.150 Variable washer
04.170 Sliding sleeve
04.180 Washer
04.190 Helical gear 3rd gear
04.200 Variable washer

The main shaft components differ for model ranges 12.1, 12.2 and 16.

Each model range is available as direct drive and overdrive version.

Installation note

Label variable washers so that they can be assigned to the correct assembly location during assembly. Thus, the measurement process is implemented for control purposes only.

1 Put main shaft on assembly aid **1X56.138.196** or clamp into a vise with protective chucks.

2 Press spline **04.030** out of bore (e. g. with a small screwdriver) and pull downwards. Secure the last helical gear again with the spline.

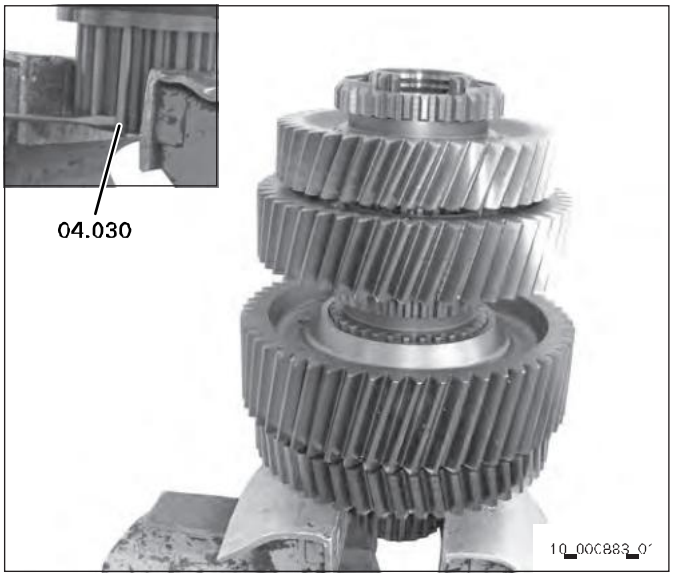

3 Remove oil tube **(5) 04.040**.



4 Take off sliding sleeve **04.170**.

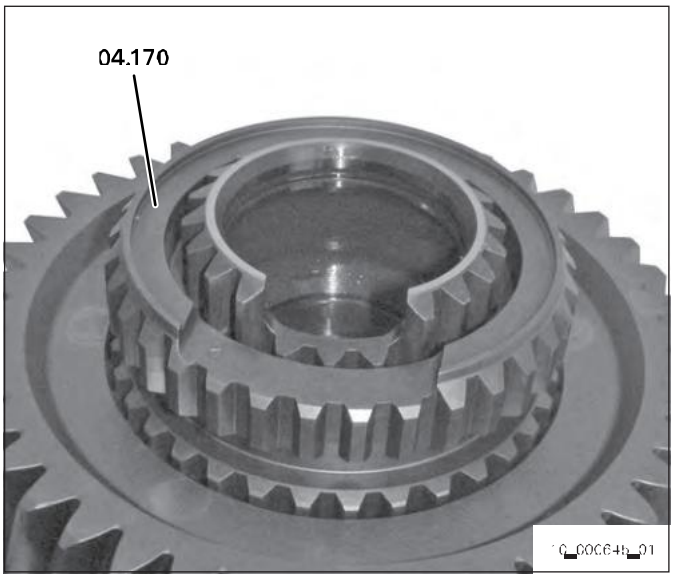

5 Offset variable washer **(9) 04.200** by half a tooth and take it off.

6 Take off helical gear 3rd gear **(12) 04.190**.

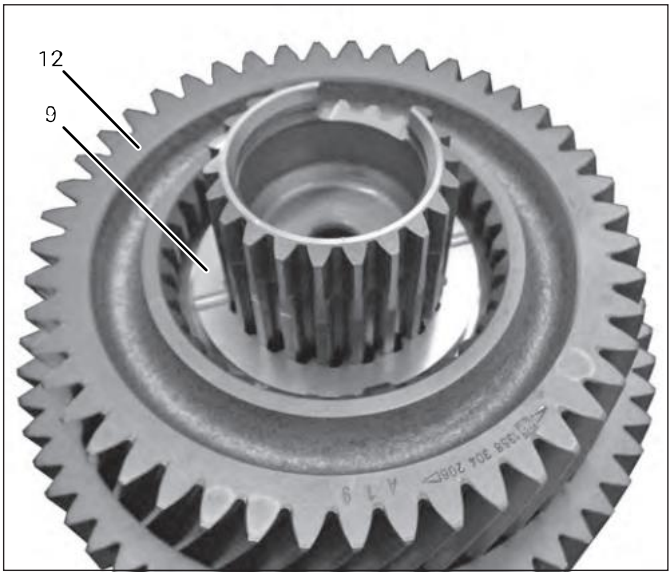

7 Offset washer **04.180** and variable washer **04.150** by half a tooth and take them off.

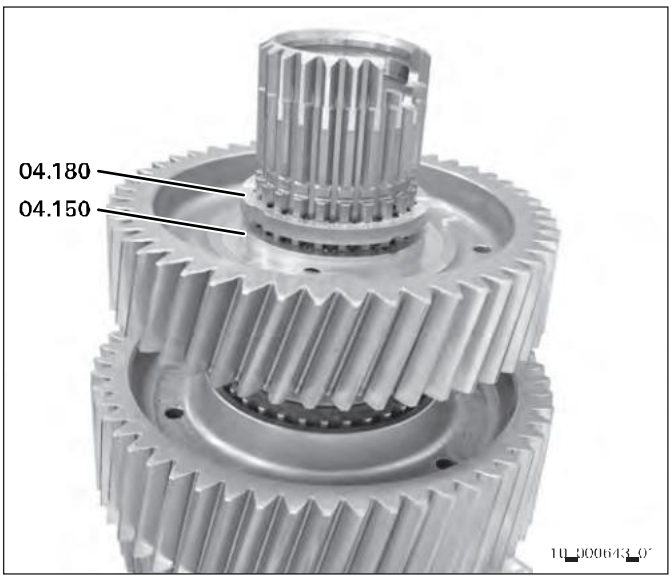

8 Take off helical gear 2nd gear **04.140**.

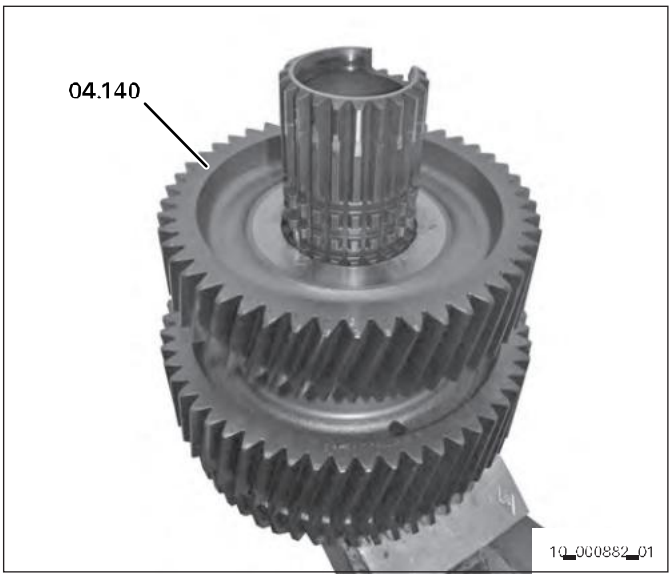

9 Pull spline **04.030** downwards.

10 Offset washer **04.130** by half a tooth and take it off.

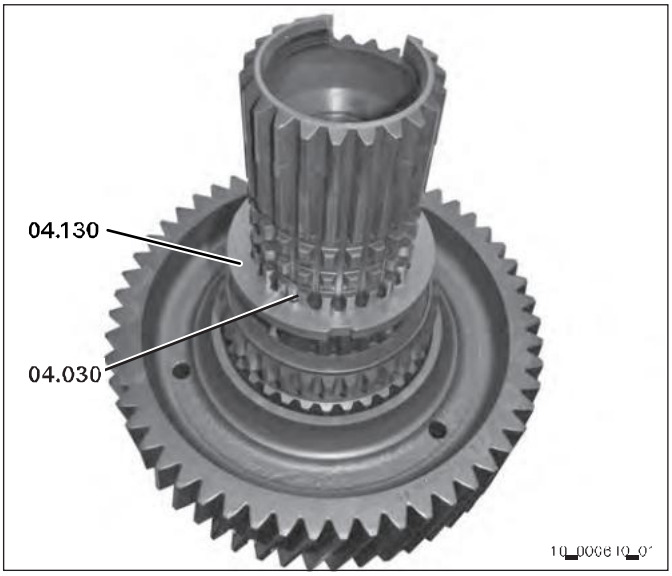

11 Take off sliding sleeve **04.090**.

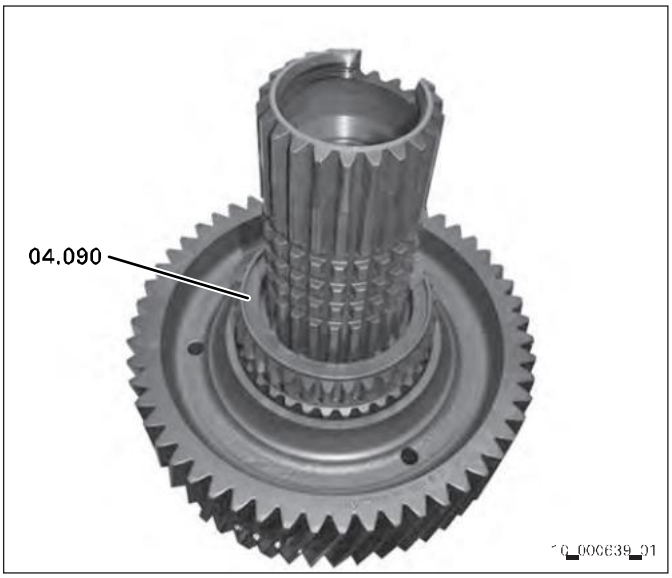

12 Pull spline (4) downwards.

13 Offset washer **04.100** by half a tooth and take it off.

14 Take off helical gear 1st gear **04.110**.

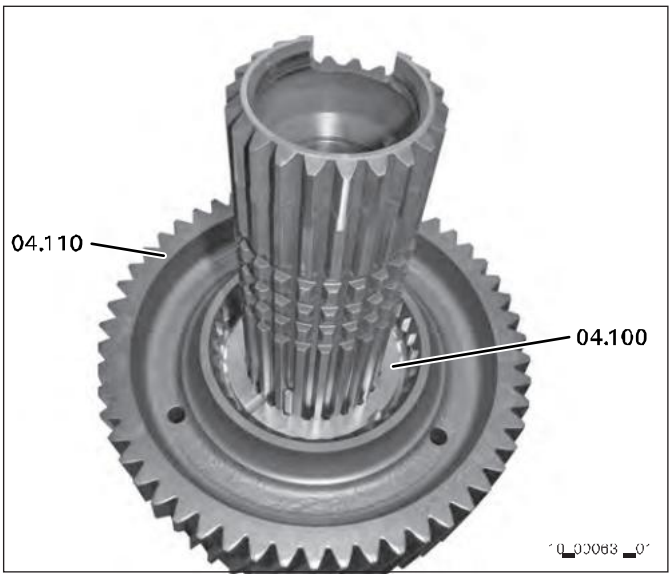

15 Offset washer **04.120** by half a tooth and take it off.

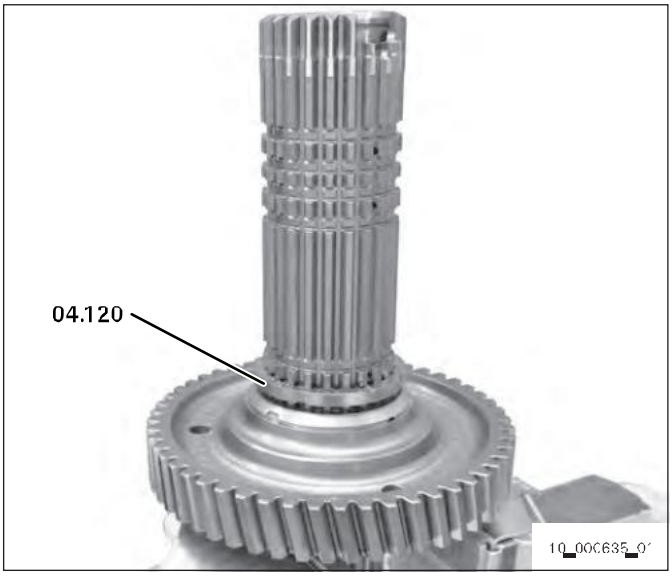

16 Offset washer with chamfer **04.080** by half a tooth and take it off.

17 Take off reverse gear helical gear **04.011**.

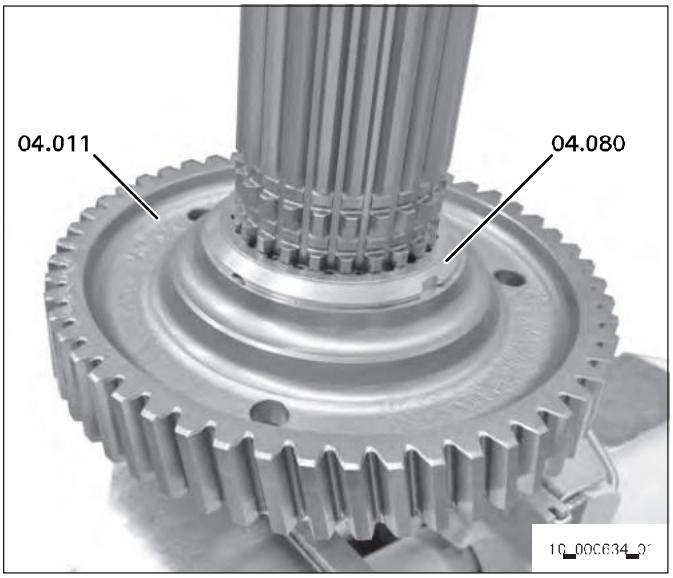

18 Completely pull out spline.

19 Take off sliding sleeve **04.042**.

20 Offset washer with chamfer **04.050** by half a tooth and take it off.

21 Remove slide ring **04.070**; if required, press it off the main shaft with a suitable tube.

22 If the oil tube **04.020** in the main shaft is damaged, please remove it.

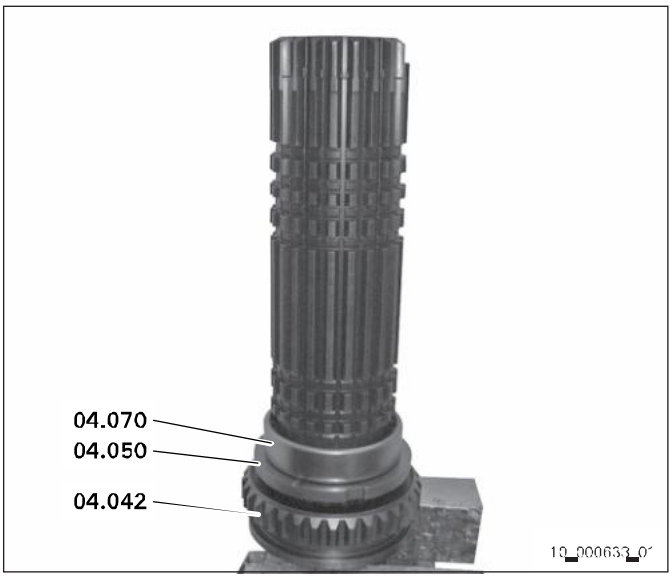

Disassembling the shift system

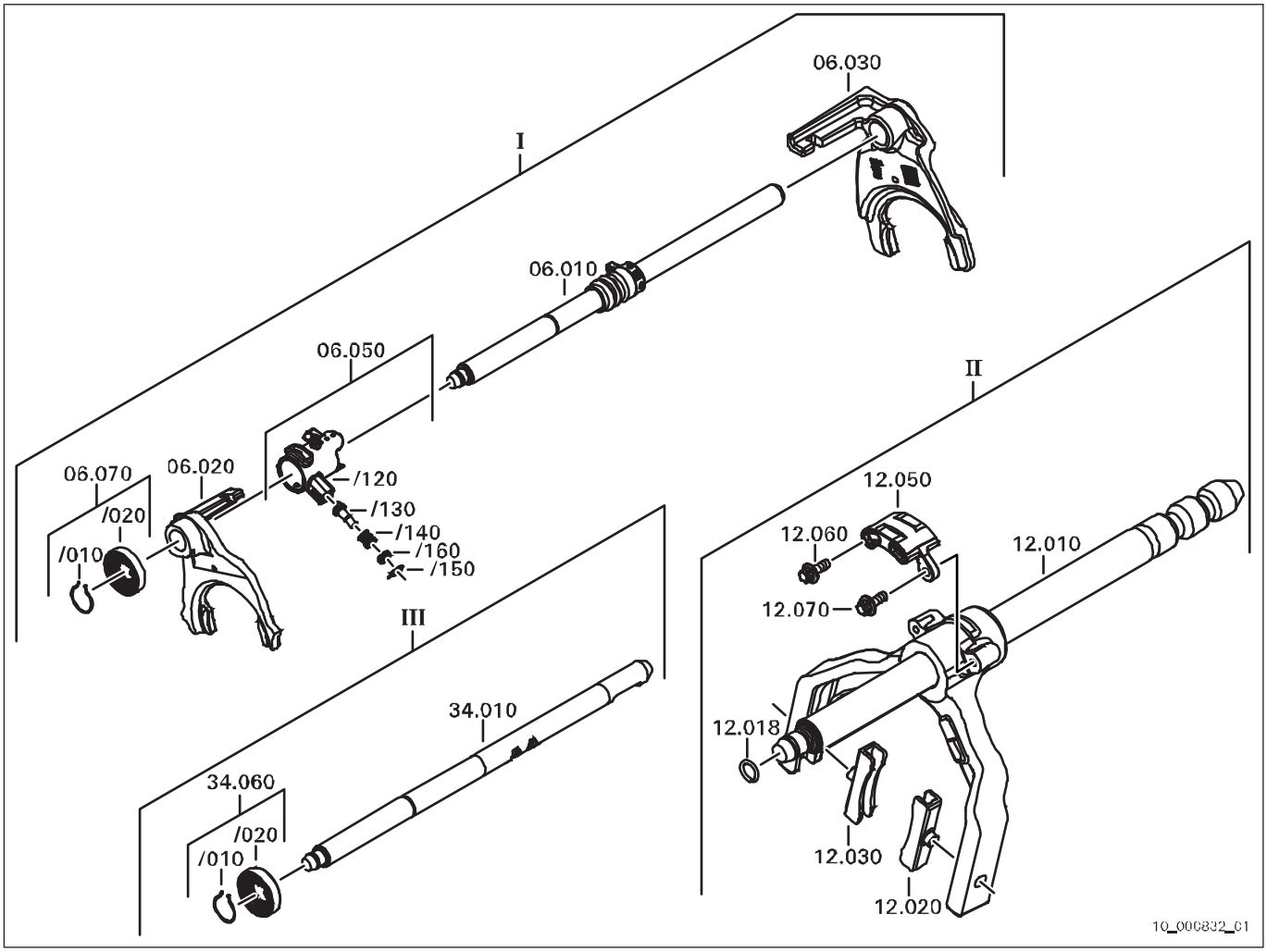

12-speed shift system

I Shift system main transmission, 12-speed

06.010	Gearshift rail (18)
06.020	Shift fork (17)
06.030	Shift fork (16)
06.050	Gearshift bush (15)
/120	Bush (10)
/130	Detent bolt (11)
/140	Compression spring (12)
/150	Securing ring (14)
/160	Cover (13)
06.070	Sensor ring (6) with spring washer (5)

II Shift system splitter group

12.010	Shift fork (1)
12.018	O-ring (8)
12.020	Sliding pad (2)
12.030	Sliding pad (2)
12.050	Sensor ring (4)
12.060	Torx screw (3)
12.070	Torx screw (3)

III Shift system range change group

34.010	Gearshift rail (7)
34.060	Sensor ring (6) with spring washer (5)

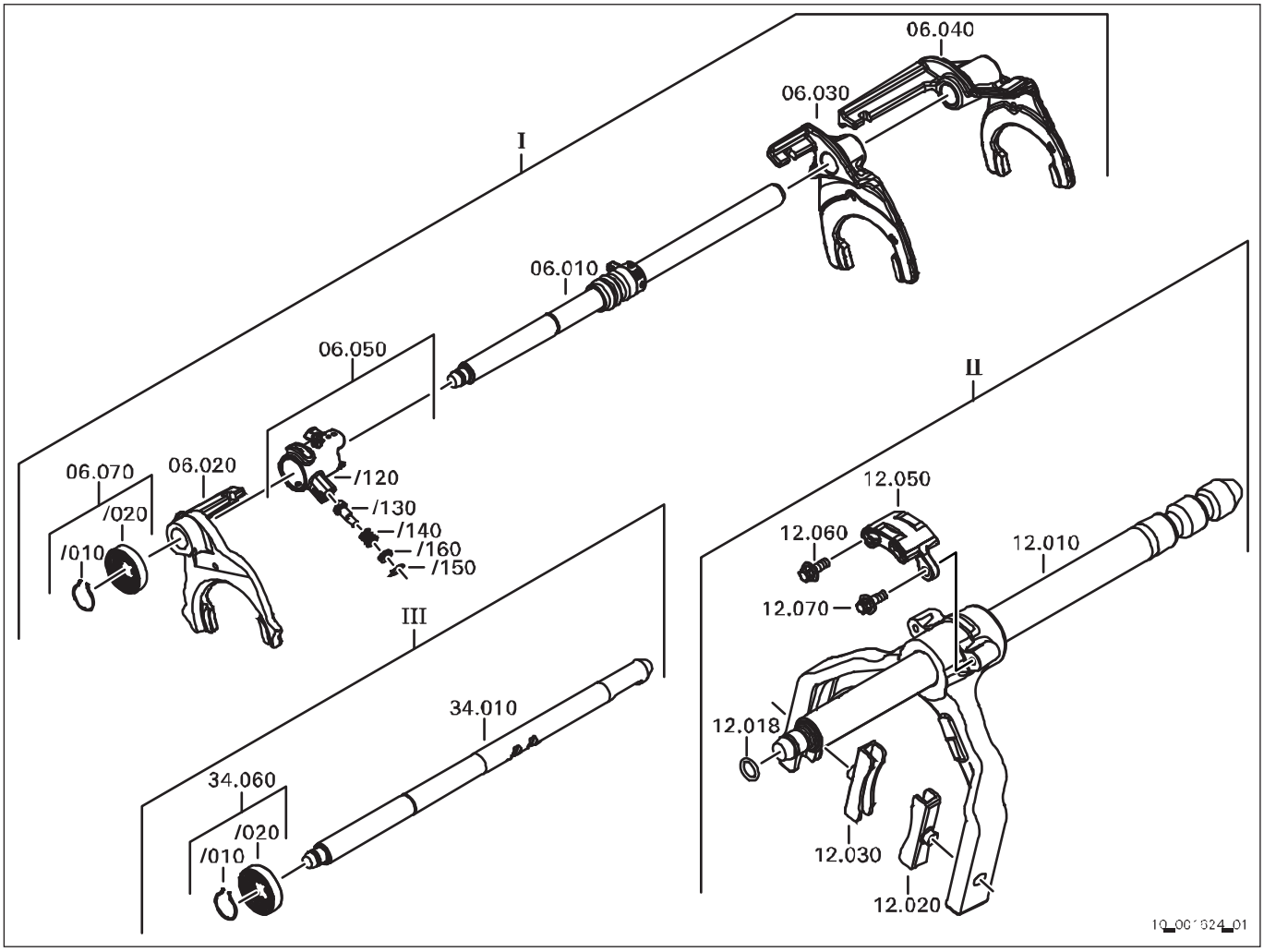

16-speed shift system

I Shift system main transmission, 16-speed

06.010	Gearshift rail (18)
06.020	Shift fork (17)
06.030	Shift fork (16)
06.040	Shift fork (19)
06.050	Gearshift bush (15)
/120	Bush (10)
/130	Detent bolt (11)
/140	Compression spring (12)
/150	Securing ring (14)
/160	Cover (13)
06.070	Sensor ring (6) with spring washer (5)

II Shift system splitter group

12.010	Shift fork (1)
12.018	O-ring (8)
12.020	Sliding pad (2)
12.030	Sliding pad (2)
12.050	Sensor ring (4)
12.060	Torx screw (3)
12.070	Torx screw (3)

III Shift system range change group

34.010	Gearshift rail (7)
34.060	Sensor ring (6) with spring washer (5)

Disassembling the main transmission (MT) shift system

1 Unsnap spring washer **(5)** of the sensor ring **(6)** from the gearshift rail, e. g. using a small screwdriver and pliers.
Remove sensor ring with spring washer from the gearshift rail.

2 12-speed version:
Turn gearshift rail **(18)** and remove shift forks **(17, 16)**.

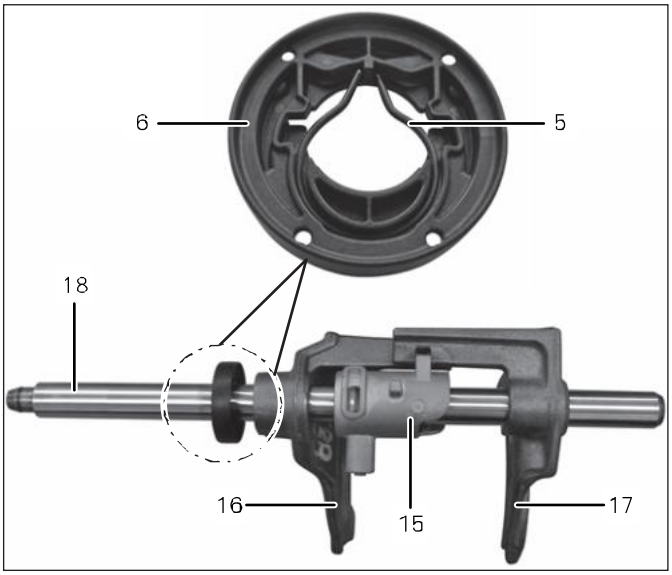

12-speed shift system 036472

16-speed version:
Turn gearshift rail and remove shift forks.

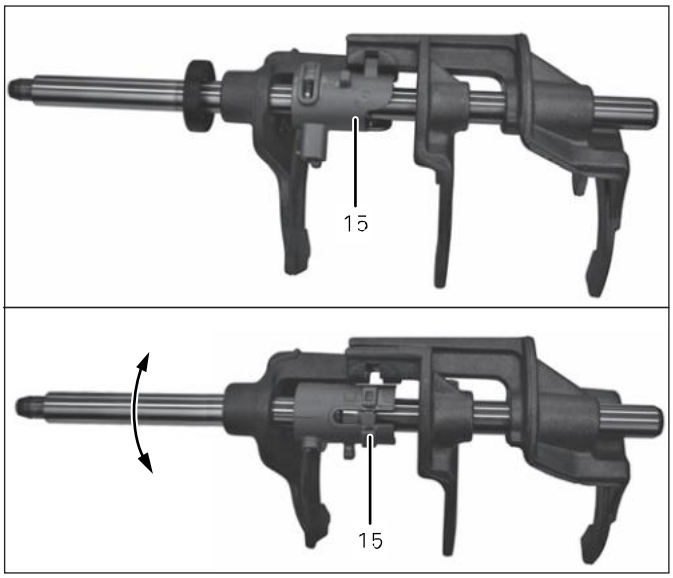

16-speed shift system 035475

3 To remove the gearshift bush **(15)** from the gearshift rail **(18)**, the detent mechanism must be disassembled first.

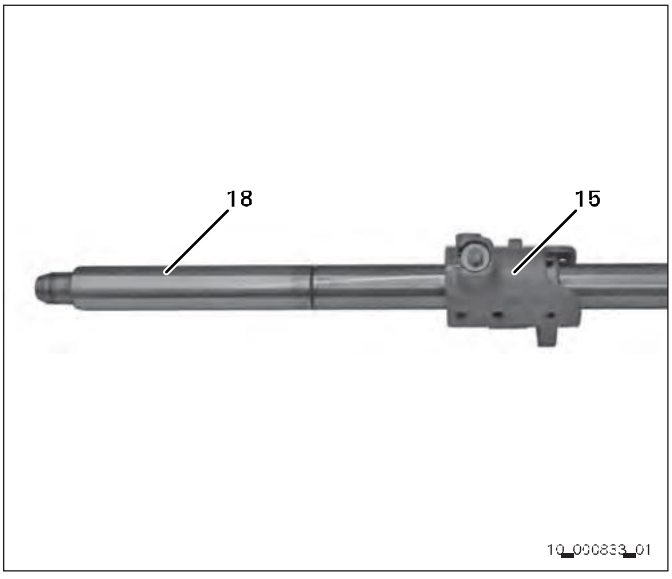

The gearshift bush **(15)** consists of:

Bush **(10)**
Detent bolt **(11)**
Compression spring **(12)**
Cover **(13)**
Securing ring **(14)**

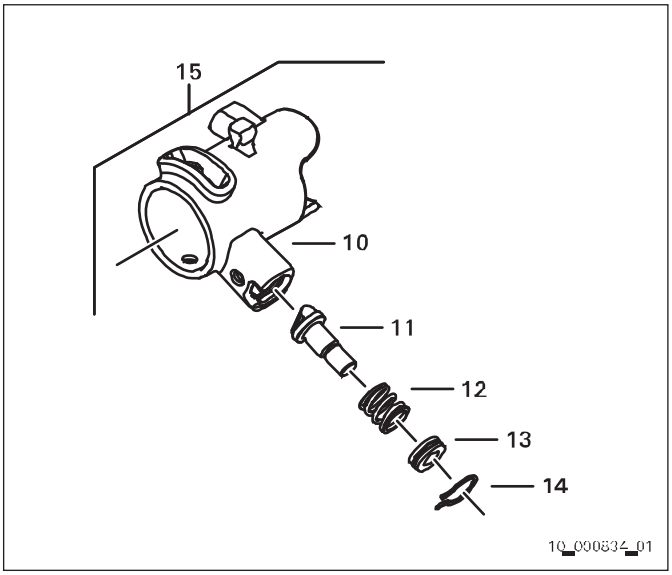

4

⚠ CAUTION

Risk of injury due to parts under spring tension.
Slight to moderate injury possible.
⇨ Wear protective goggles.

Disassemble the detent mechanism of the gearshift bush **(15)**.
Cover **(13)** is under spring tension and may jump out. Use an auxiliary tool **(55)** to press against the cover **(13)**. Use pliers to contract the securing ring **(14)**.

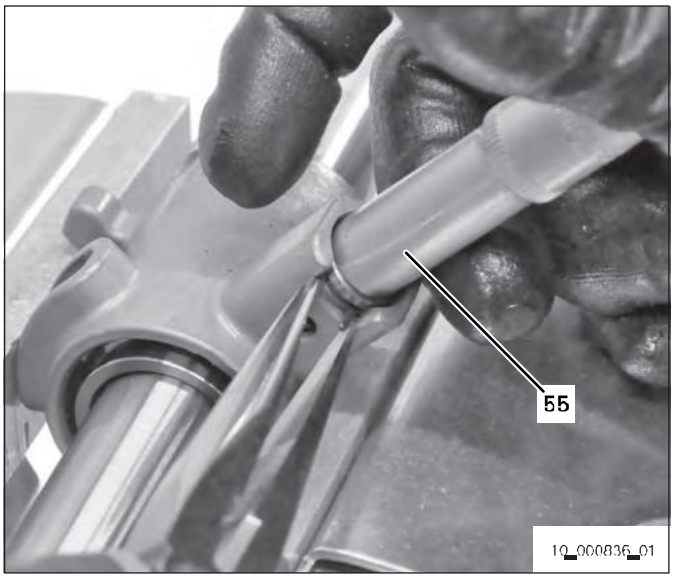

5 Now, the cover **(13)**, compression spring **(12)** and detent bolt **(11)** can be removed from the bush **(10)**.

6 If required, unsnap the securing ring **(14)** from the cover **(13)**.

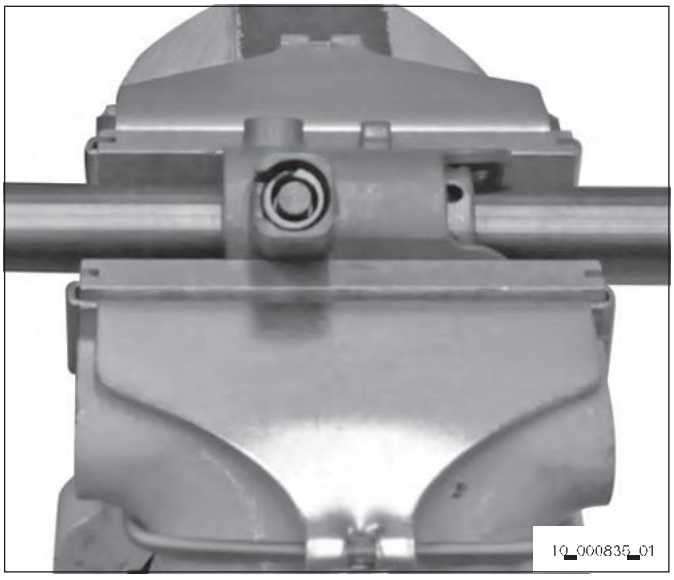

Disassembling the range change group (R/C) gearshift rail

1 Unsnap spring washer **(5)** of the sensor ring **(6)** from the R/C gearshift rail **(7)**, e. g. using a small screwdriver and pliers.

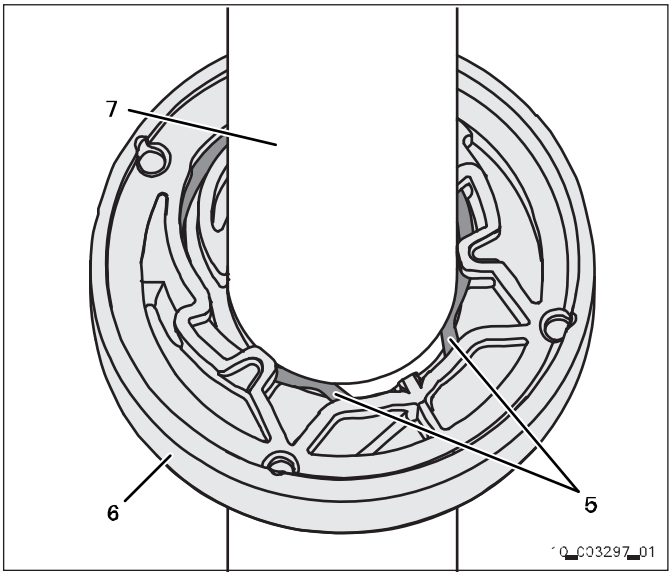

2 Remove sensor ring **(6)** with spring washer from the gearshift rail **(7)**.

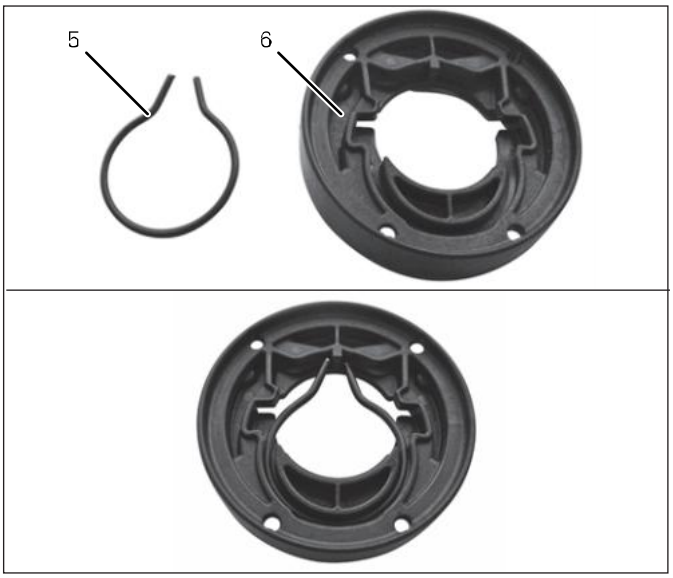

Disassembling the splitter group (S/G) shift fork

1 Remove sliding pads **(2)** from the shift fork **(1)**.

2 Remove two torx screws **(3)** and take off sensor ring **(4)**.

3 Remove O-ring **(8)**.

4 The following should be noted when washing the parts: To protect lubrication, slide sleeve **1X56.197.790** over the shift fork **(1)**.

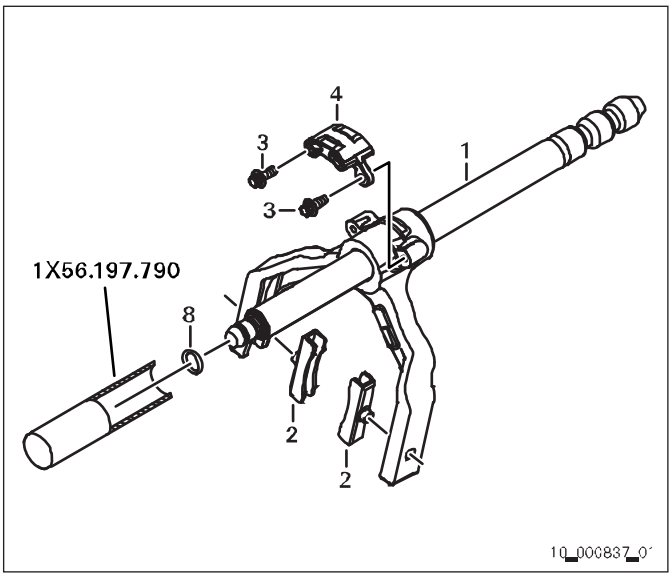

Disassembling the bearing support

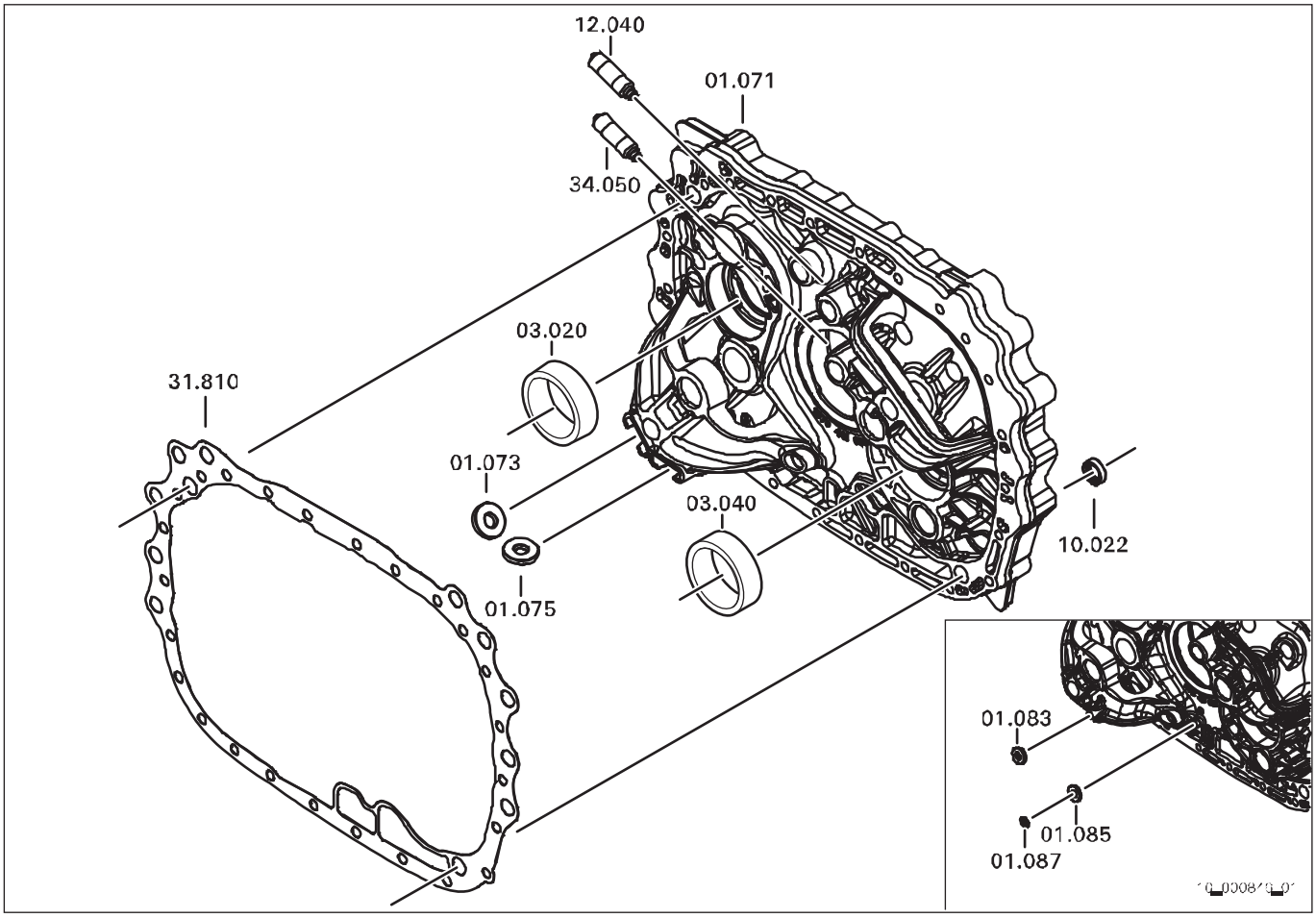

All model ranges

01.071 Bearing support
01.073 Solenoid **(3)**
01.075 Solenoid **(3)**
03.020 Tapered roller bearing outer ring **(4)**
03.040 Tapered roller bearing outer ring **(4)**
10.022 Seal
12.040 Detent bolt **(1)**
31.810 Seal **(11)**
34.050 Detent bolt **(2)**

Only for model range 12.1

01.083 Solenoid
01.085 Solenoid
01.087 Clamp washer

1 Detent mechanism R/C and S/G gearshift rail. Remove detent bolt **(1** and **2)** from the bearing support **10.071**.

2 Remove seal **(11)**.

3 Model ranges 12.2 and 16:
Remove two solenoids **(3)**.

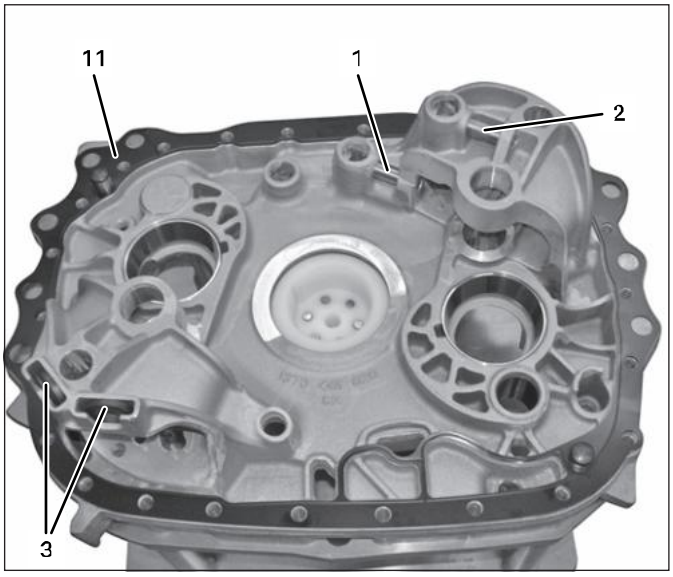

03b494_1

3 Model range 12.1:
- Remove clamp washer **01.087**.
- Remove and clean both solenoids **01.083, 01.085**.

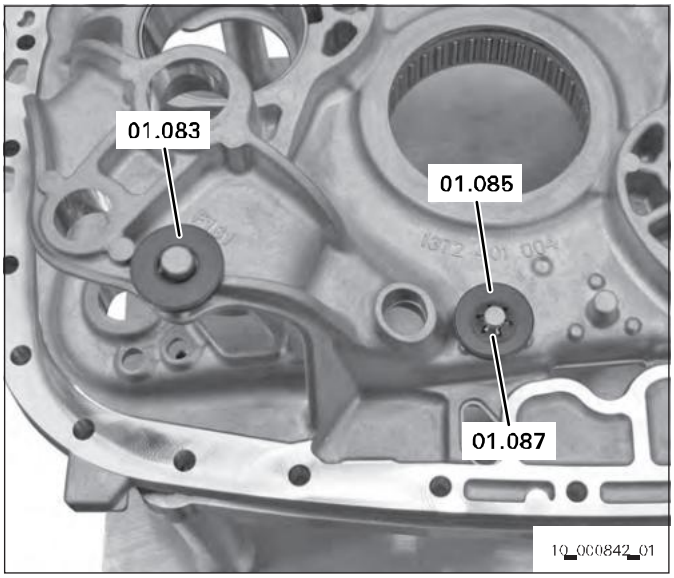

4 Use internal extractor **1X56.122.211** and counter support **1X56.122.228** to remove the two tapered roller bearings' **(4)** outer rings.

5 Remove seal **10.022**.

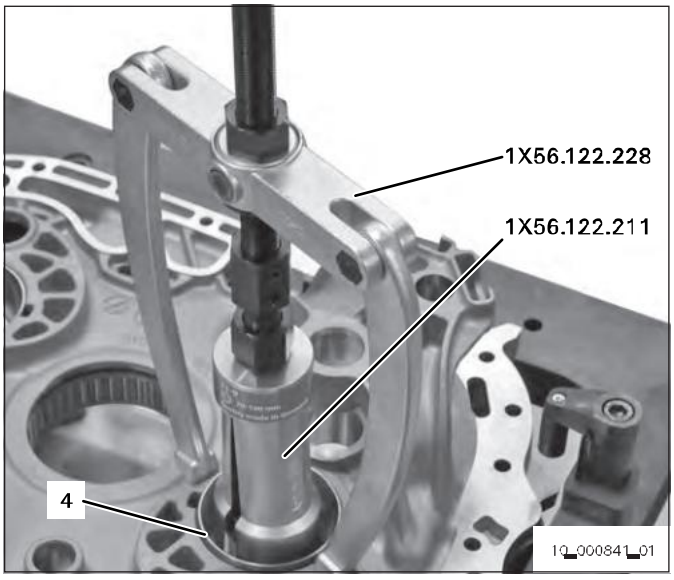

Assembling the Transmission

Assembling the bearing support

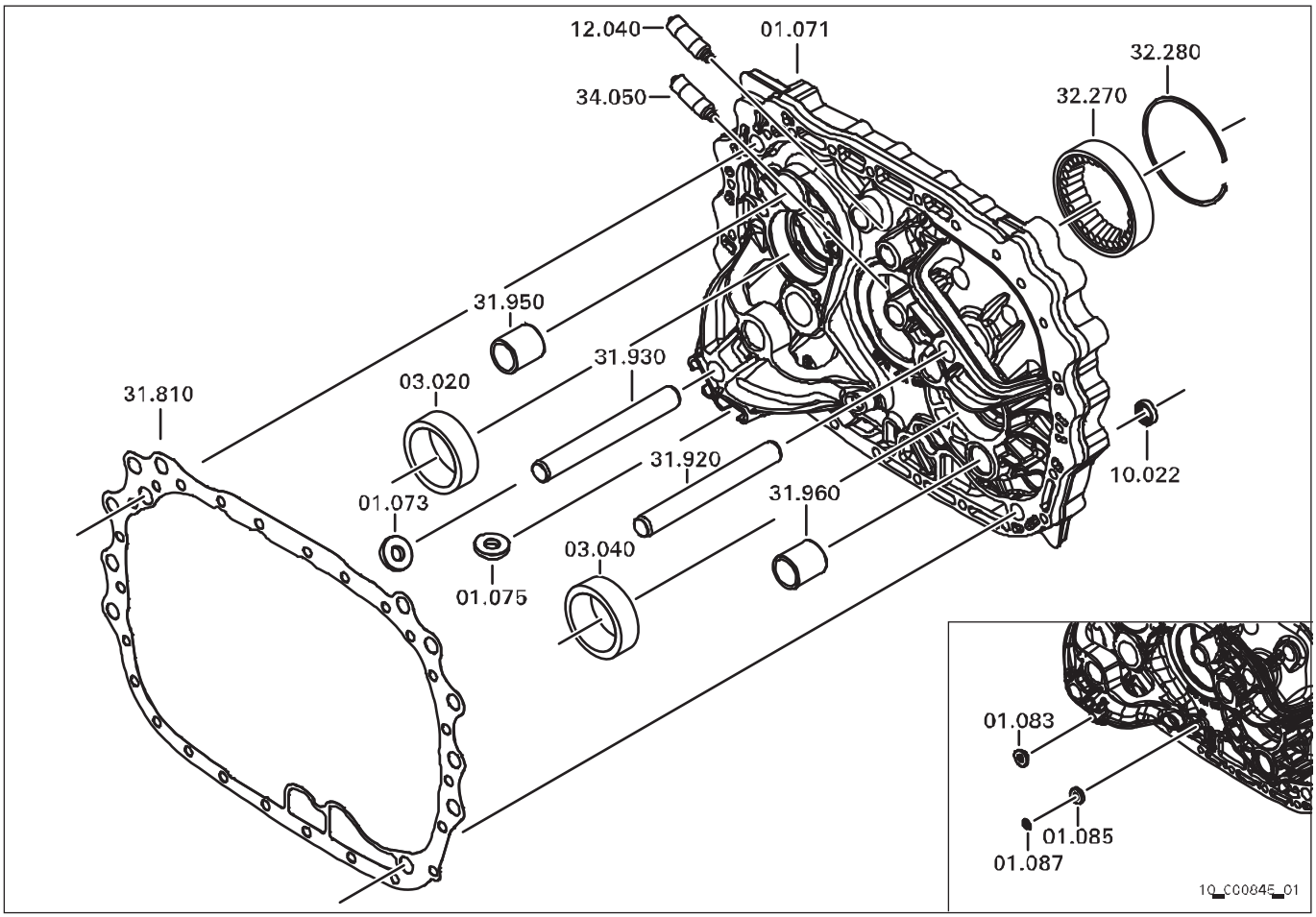

All model ranges

01.071 Bearing support
01.073 Solenoid **(3)**
01.075 Solenoid **(3)**
03.020 Tapered roller bearing outer ring **(4)**
03.040 Tapered roller bearing outer ring **(4)**
10.022 Seal **(6)**
12.040 Detent bolt **(1)**
31.810 Seal **(11)**
31.920 Cylindrical pin **(10)**
31.930 Cylindrical pin **(10)**
31.950 Bush **(9)**
31.960 Bush **(9)**
32.270 Cylindrical roller bearing outer ring **(8)**
32.280 Snap ring **(7)**
34.050 Detent bolt **(2)**

Only for model range 12.1

01.083 Solenoid
01.085 Solenoid
01.087 Clamp washer

For the 16-speed version, the tapered roller bearing dimensions are different at the output end **03.020, 03.040** (50x90x32) and at the input end **03.010, 03.030** (50x90x28); refer to Chapter Countershaft.

⚠ CAUTION

Risk of burns due to contact with hot surfaces.
Slight to moderate injury possible.
⇨ Wear protective gloves.

Heated parts can cause burns to parts of the body.

In order to avoid the generation of assembly grooves, lightly coat the bearings' seats with oil prior to heating them up.

1 Press in the two outer rings of the output-end tapered roller bearings **(4)**:
- Heat the bearing seats of the two tapered roller bearings **(4)** up to approx. 100 °C.
- When inserting the outer rings with the press-in device **1X56.138.738**, make sure that the antirotation device (see arrow) is placed in the recess of the bearing support **01.071**.

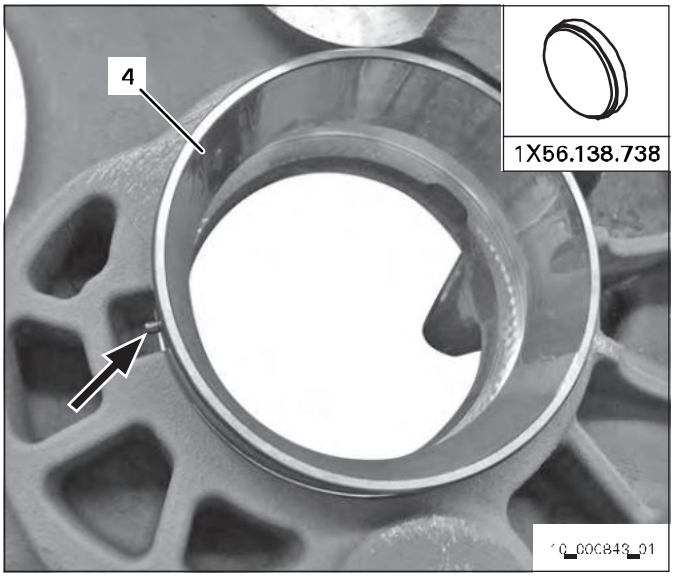

2 Rotate bearing support **01.071** by 180°.

3 Heat bearing seat of the cylindrical roller bearing **(8)** to approx. 100°C.
Use adapter and attached washer **1X56.137.124** to press the outer ring of the cylindrical roller bearing **(8)** into the bearing support **01.071** until firmly home.

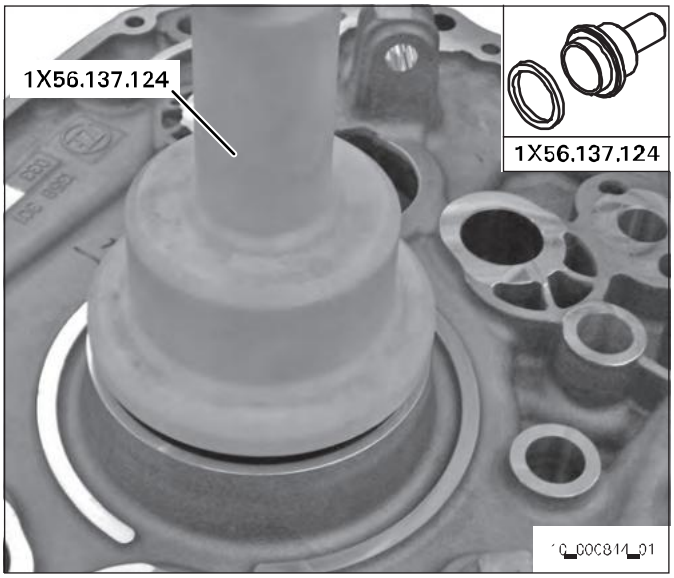

4 Insert snap ring **(7)**.
Ensure that snap ring is firmly home with the groove base.

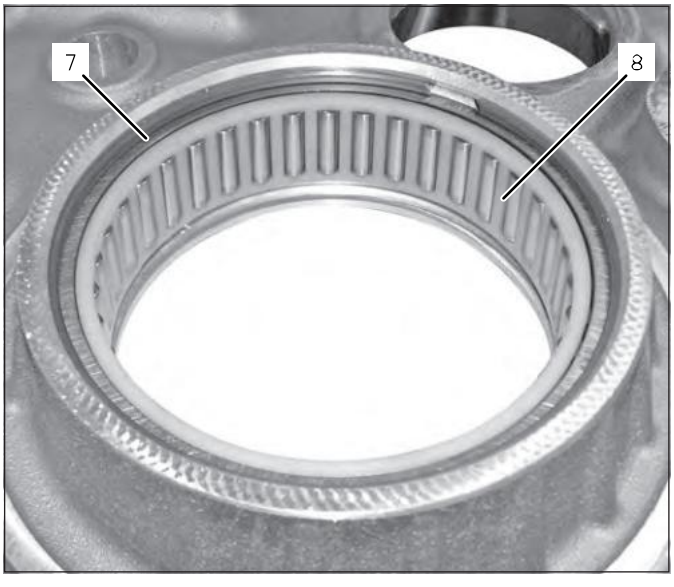

5

NOTICE

Damage due to housing failure.

⇨ Do not tilt bush while pressing it in.

In case the two bushes **(9)** are missing, heat bearing support in this area to approx. 100°C. Lightly grease both bushes and press them in carefully until firmly home.

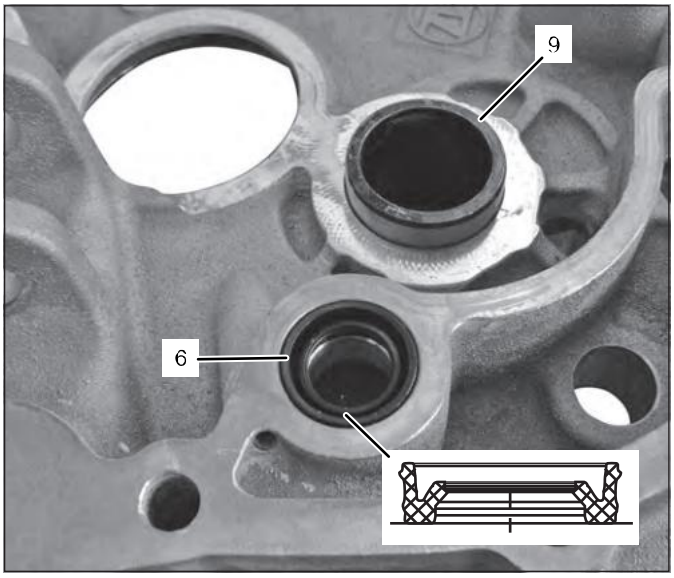

6 Insert seal **(6)** in the correct installation position.

7 Provide assembly fixture **1X56.138.729** and ensure that the centering base **1X56.138.729/2** and the spacer **1X56.138.729/5** for the R/C gearshift rail are inserted. The centering base and the spacer are delivered together with the assembly fixture **1X56.138.729**.

8 Place bearing support onto fixture **1X56.138.729**.

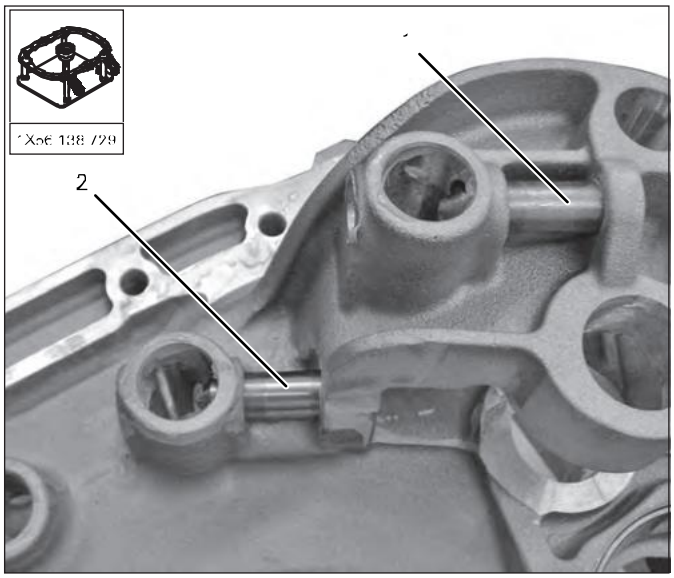

9 Lightly grease bores of the detent bolts and gearshift rails.
Insert detent bolts for R/C **(2)** and S/G **(1)**.

10 **Model range 12.1:**
- Insert solenoid **01.083**.
- Insert solenoid **01.085** and secure with a new clamp washer **01.087**.

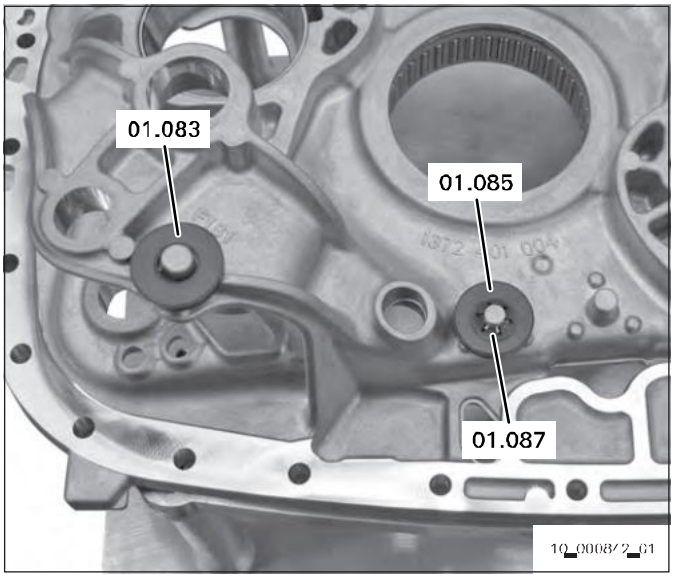

10 **Model ranges 12.2 and 16:**
– Insert two solenoids **(3)**.

11 Insert two centering pins **(10)** thread facing downwards into the bearing support.

12 Fit new seal **(11)**.

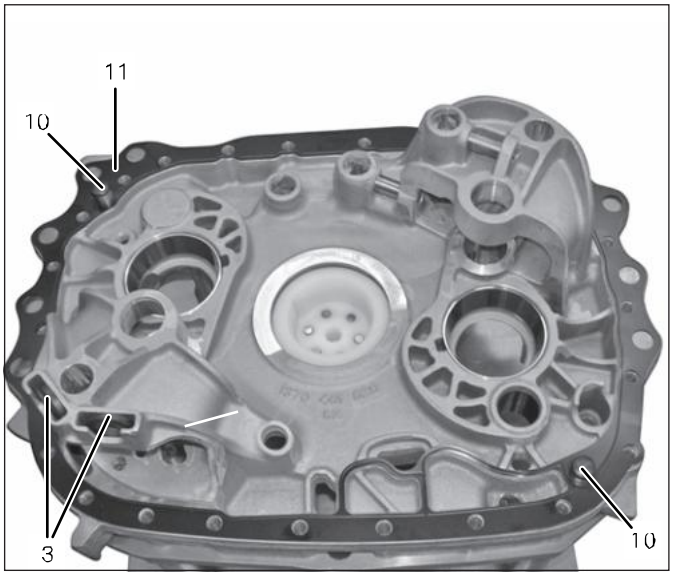

Assembling the shift system

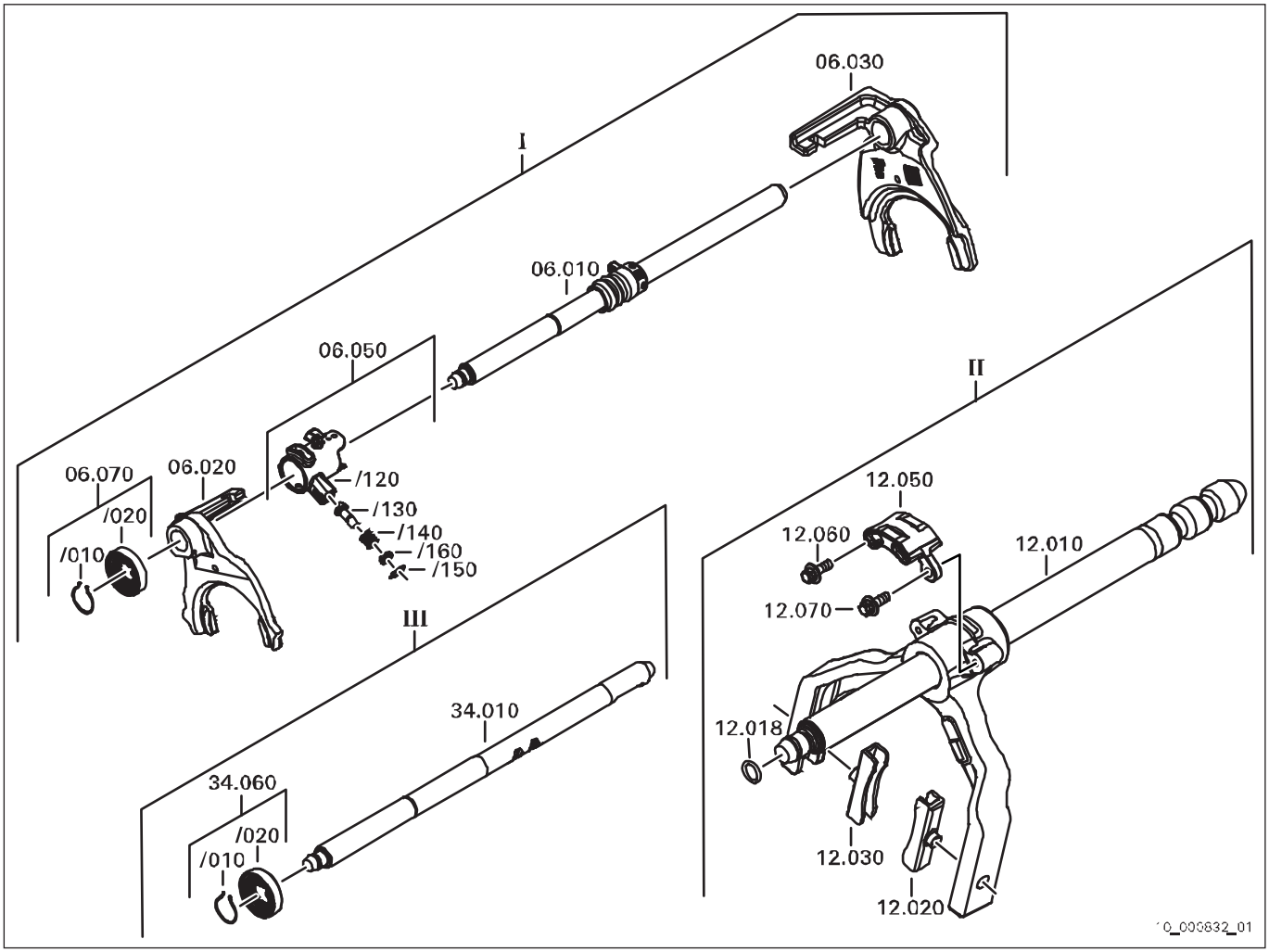

12-speed shift system

I Shift system main transmission, 12-speed

06.010	Gearshift rail (18)
06.020	Shift fork (17)
06.030	Shift fork (16)
06.050	Gearshift bush (15)
/120	Bush (10)
/130	Detent bolt (11)
/140	Compression spring (12)
/150	Securing ring (14)
/160	Cover (13)
06.070	Sensor ring (6) with spring washer (5)

II Shift system splitter group

12.010	Shift fork (1)
12.018	O-ring (8)
12.020	Sliding pad (2)
12.030	Sliding pad (2)
12.050	Sensor ring (4)
12.060	Torx screw (3)
12.070	Torx screw (3)

III Shift system range change group

34.010	Gearshift rail (7)
34.060	Sensor ring (6) with spring washer (5)

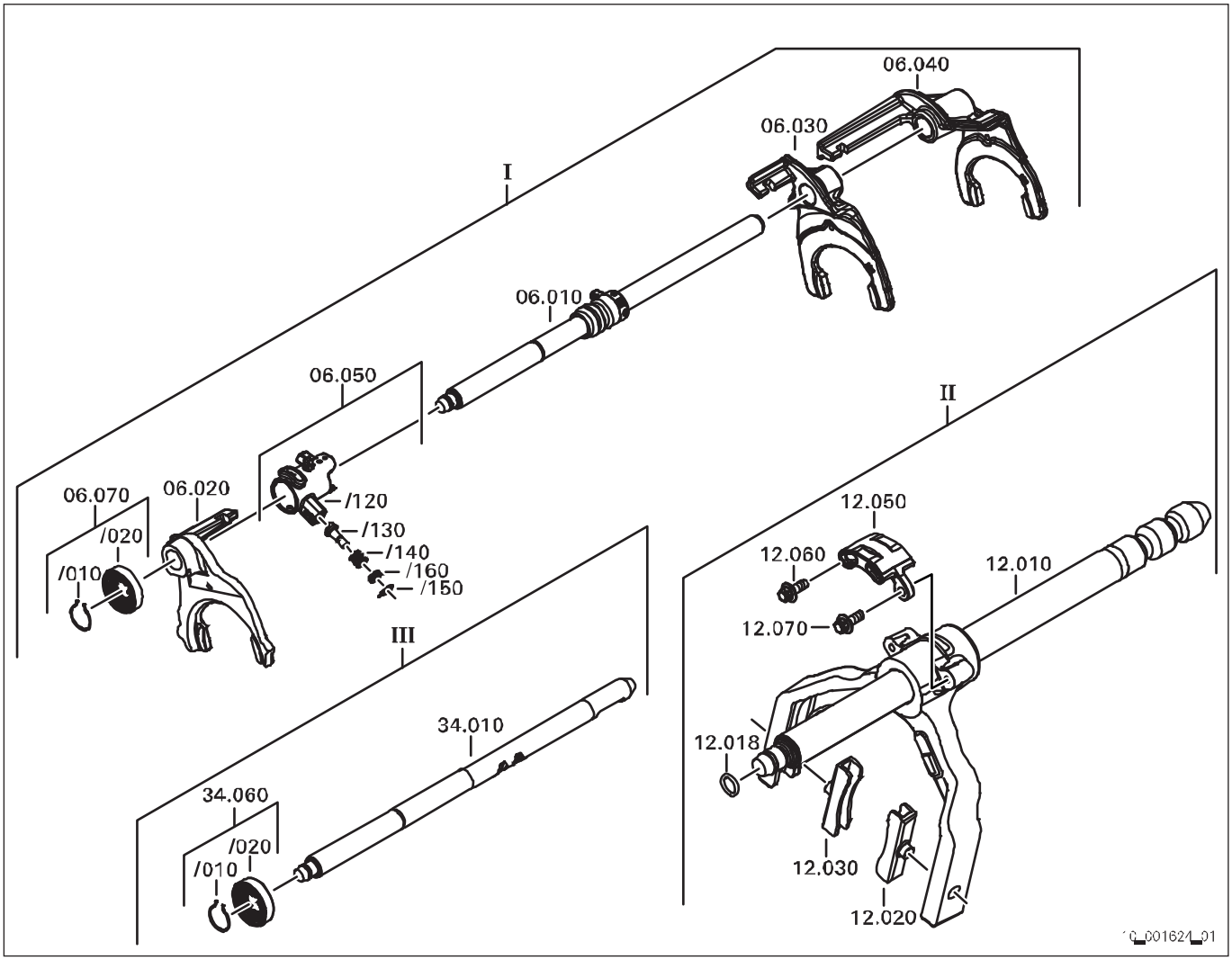

16-speed shift system

I Shift system main transmission, 16-speed

06.010	Gearshift rail (18)
06.020	Shift fork (17)
06.030	Shift fork (16)
06.040	Shift fork (19)
06.050	Gearshift bush (15)
/120	Bush (10)
/130	Detent bolt (11)
/140	Compression spring (12)
/150	Securing ring (14)
/160	Cover (13)
06.070	Sensor ring (6) with spring washer (5)

II Shift system splitter group

12.010	Shift fork (1)
12.018	O-ring (8)
12.020	Sliding pad (2)
12.030	Sliding pad (2)
12.050	Sensor ring (4)
12.060	Torx screw (3)
12.070	Torx screw (3)

III Shift system range change group

34.010	Gearshift rail (7)
34.060	Sensor ring (6) with spring washer (5)

Completing the splitter group (S/G) shift fork

1 Secure sensor ring **(4)** with two M6 Torx screws **(3)**.
Tightening torque: **9.5 Nm**

2 Insert new O-ring **(8)** and grease lightly.

3 Insert two sliding pads **(2)** into shift fork.

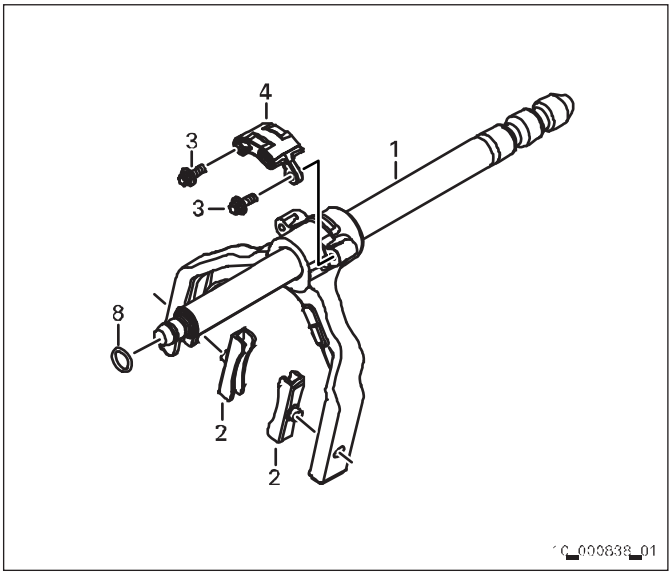

Completing the range change group (R/C) gearshift rail

1 Insert new spring washer **(5)** in sensor ring **(6)**.

2

⚠ CAUTION

Risk of accident if work is not performed correctly.
Slight to moderate injury possible.
⇨ Carefully and precisely position the sensor ring on the gearshift rail.

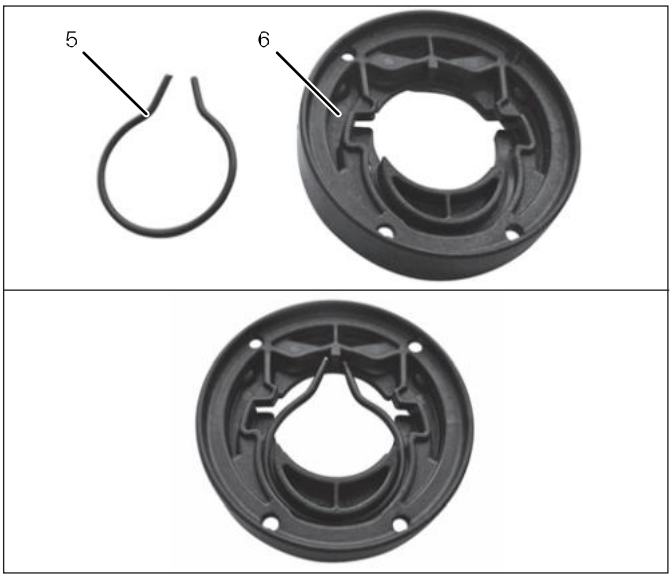

035485

Observe the following:
- If the sensor ring **(6)** is incorrectly positioned on the gearshift rail **(7)**, this may lead to incorrect gear changes in the transmission. Incorrect gear changes may increase the risk of accidents.

Positioning sensor ring on gearshift rail:
- Place protective sleeve **1X56.138.731** onto gearshift rail **(7)**.
- Push the sensor ring **(6)** over the protective sleeve onto the gearshift rail **(7)**.
- You must feel and hear the sensor ring **(6)** snap into the groove.

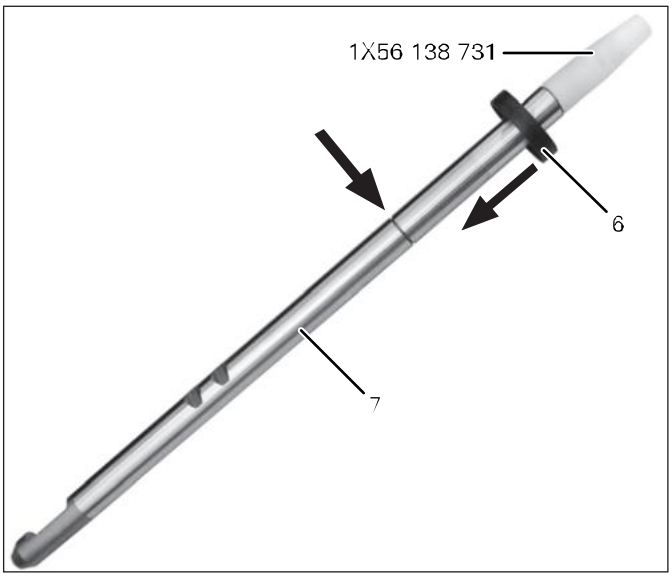

035469_1

When assembling the sensor ring, the following assembly characteristics must be met:
- You must hear the sensor ring **(6)** snap in.
- Visual inspection: The sensor ring **(6)** is correctly positioned if the spring washer **(5)** is located inside the groove of the gearshift rail **(7)**.
- The sensor ring **(6)** must easily rotate around the gearshift rail **(7)**.

Completing the gearshift bush (15)

Bush **(10)**
Detent bolt **(11)**
Compression spring **(12)**
Cover **(13)**
Securing ring **(14)**

1 Insert new securing ring **(14)** into cover **(13)**.

2 Engage bush **(10)** with the gearshift bush on the gearshift rail, then clamp into a vise.

3 Insert detent bolt **(11)** into the bush **(10)** .

4 Fit compression spring **(12)**.

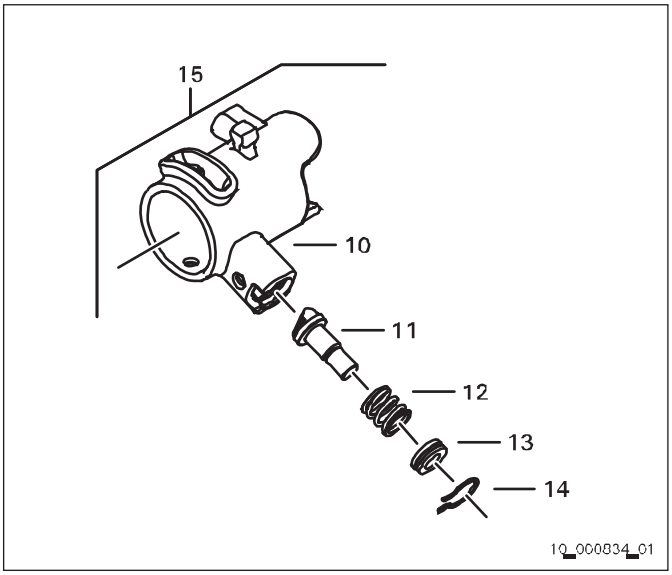

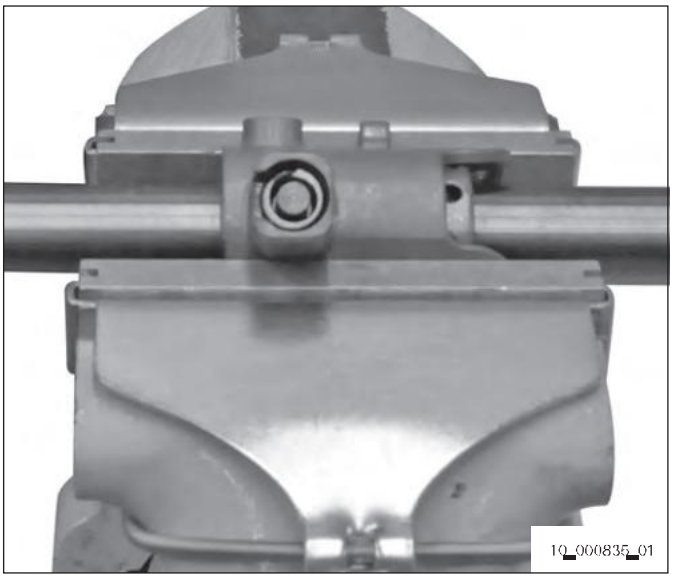

5 Using an auxiliary tool **(55)**, press cover **(13)** into the bush **(10)** while contracting the securing ring **(14)** with pliers and snapping it into the groove of the bush **(10)**.

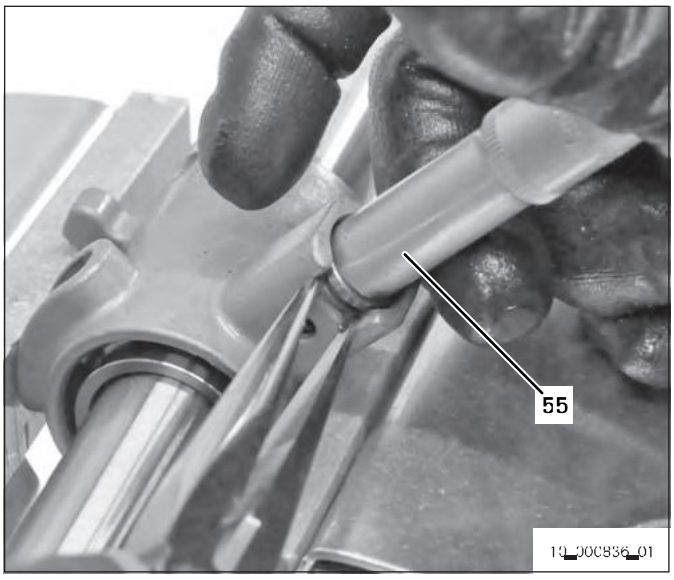

DSC / 100

12-speed version
Completing the main transmission gearshift rail

1 Place the shift forks **(16, 17)** on the gearshift rail in the correct position.

2 Align shift forks **(16, 17)** and engage with the gearshift bush **(15)**.

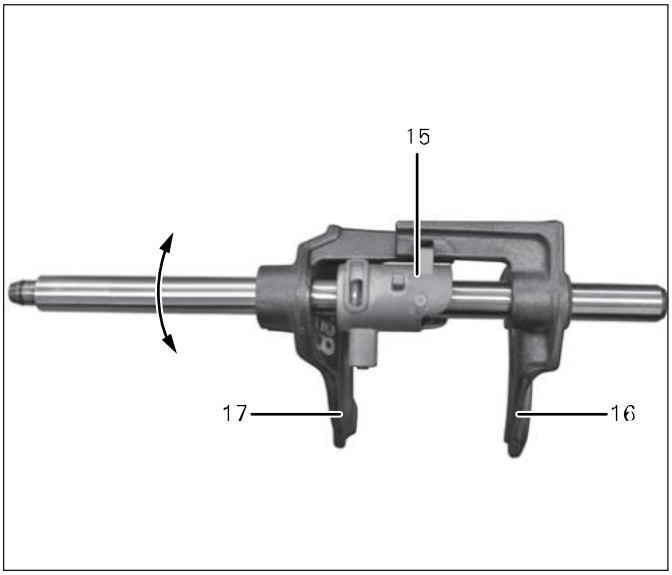

12-speed 035497

3 Insert new spring washer **(5)** into the sensor ring **(6)**.

4

⚠ CAUTION

Risk of accident if work is not performed correctly.
Slight to moderate injury possible.
⇨ Carefully and precisely position the sensor ring on the gearshift rail.

Observe the following:
- If the sensor ring **(6)** is incorrectly positioned on the gearshift rail **(18)**, this may lead to incorrect gear changes in the transmission.
  Incorrect gear changes may increase the risk of accidents.

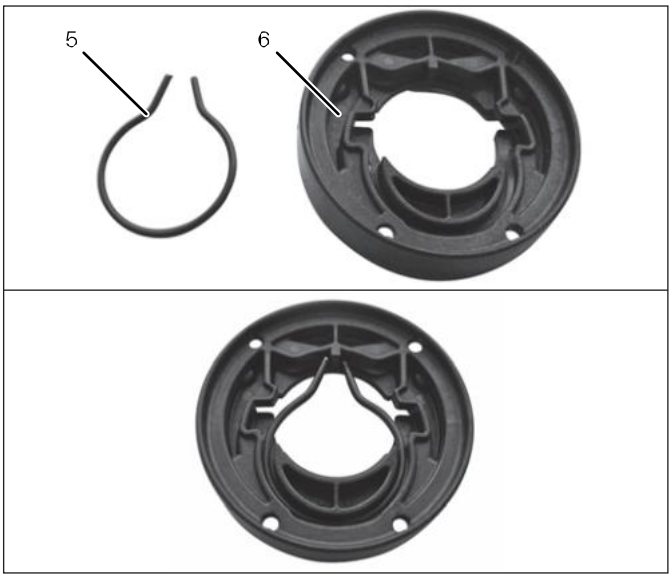

035485

Positioningsensor ring on gearshift rail:
- Place protective sleeve **1X56.138.731** onto gearshift rail.
- Push the sensor ring **(6)** over the protective sleeve onto the gearshift rail **(18)**.
- You must feel and hear the sensor ring **(6)** snap into the groove.

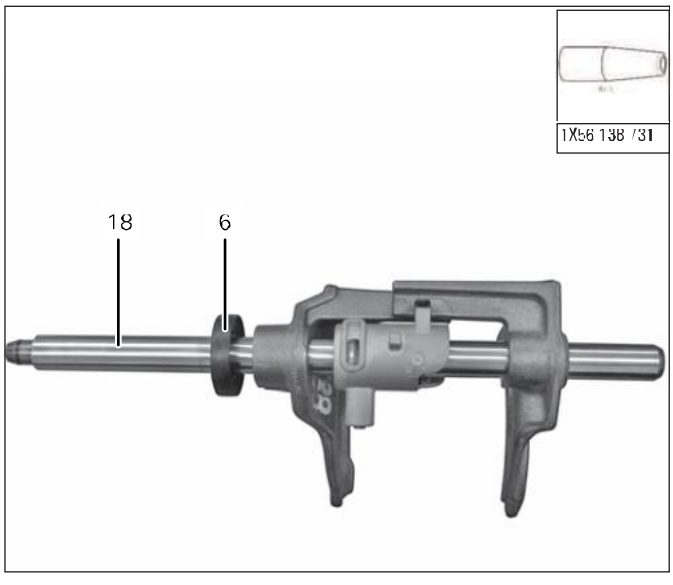

036471

When assembling the sensor ring, the following assembly characteristics must be met:
- You must hear the sensor ring **(6)** snap in.
- Visual inspection: The sensor ring **(6)** is correctly positioned if the spring washer is located inside the groove of the gearshift rail **(18)**.
- The sensor ring **(6)** must easily rotate around the gearshift rail **(18)**.

1358_280
2017-03

16-speed version
Completing the main transmission gearshift rail

1 Place the shift forks **(16, 17, 19)** on the gearshift rail **(18)** in the correct position.

2 Align shift forks and engage with the gearshift bush **(15)**.

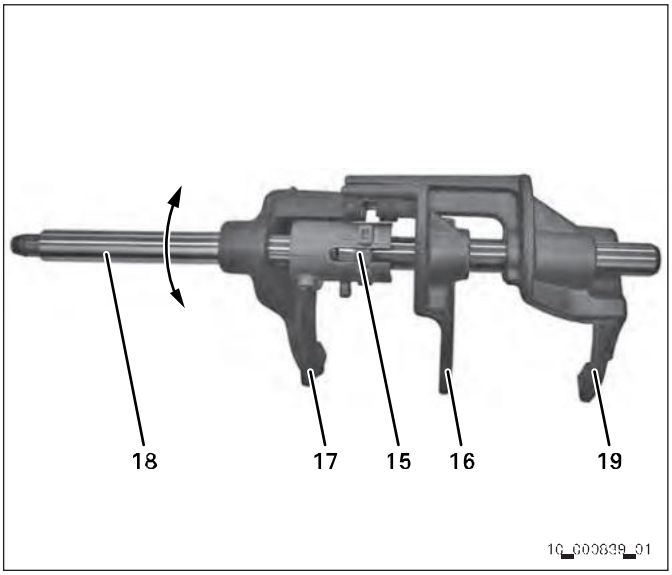

16-speed

3 Insert new spring washer **(5)** into the sensor ring **(6)**.

4

⚠ CAUTION

Risk of accident if work is not performed correctly.
Slight to moderate injury possible.
⇨ Carefully and precisely position the sensor ring on the gearshift rail.

Observe the following:
- If the sensor ring **(6)** is incorrectly positioned on the gearshift rail **(18)**, this may lead to incorrect gear changes in the transmission.
  Incorrect gear changes may increase the risk of accidents.

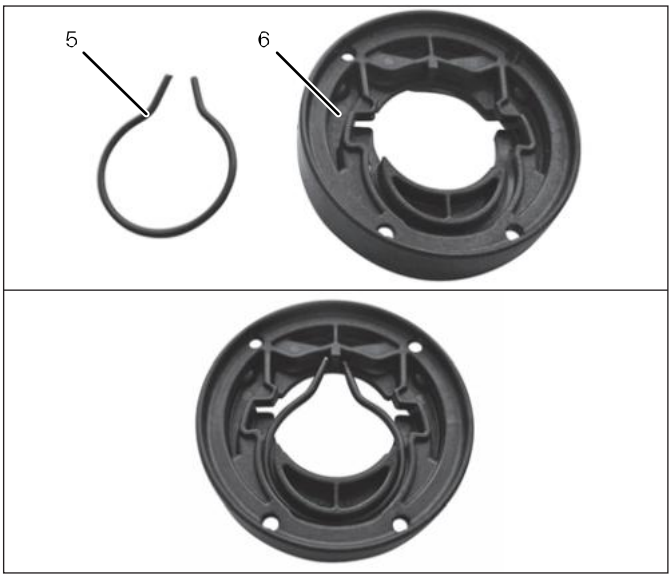

Positioningsensor ring on gearshift rail:
- Place protective sleeve **1X56.138.731** onto gearshift rail.
- Push the sensor ring **(6)** over the protective sleeve onto the gearshift rail **(18)**.
- You must feel and hear the sensor ring **(6)** snap into the groove.

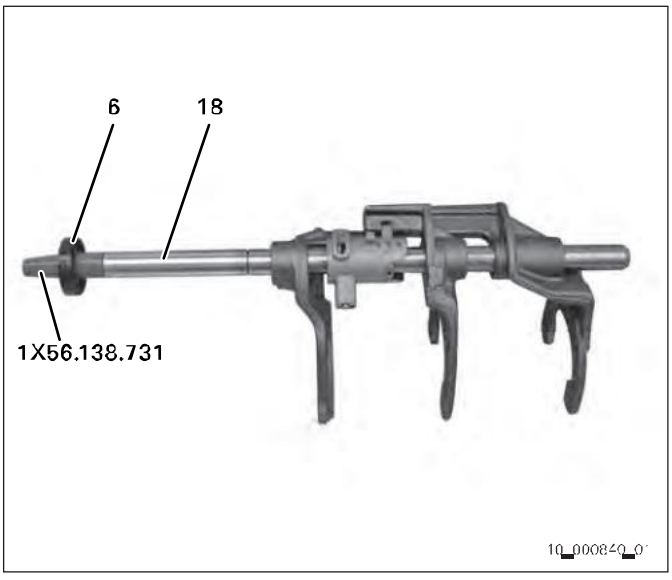

When assembling the sensor ring, the following assembly characteristics must be met:
- You must hear the sensor ring **(6)** snap in.
- Visual inspection: The sensor ring **(6)** is correctly positioned if the spring washer is located inside the groove of the gearshift rail **(18)**.
- The sensor ring **(6)** must easily rotate around the gearshift rail **(18)**.

1358_280
2017-03

Assembling the main shaft, 12-speed, model range 12.1

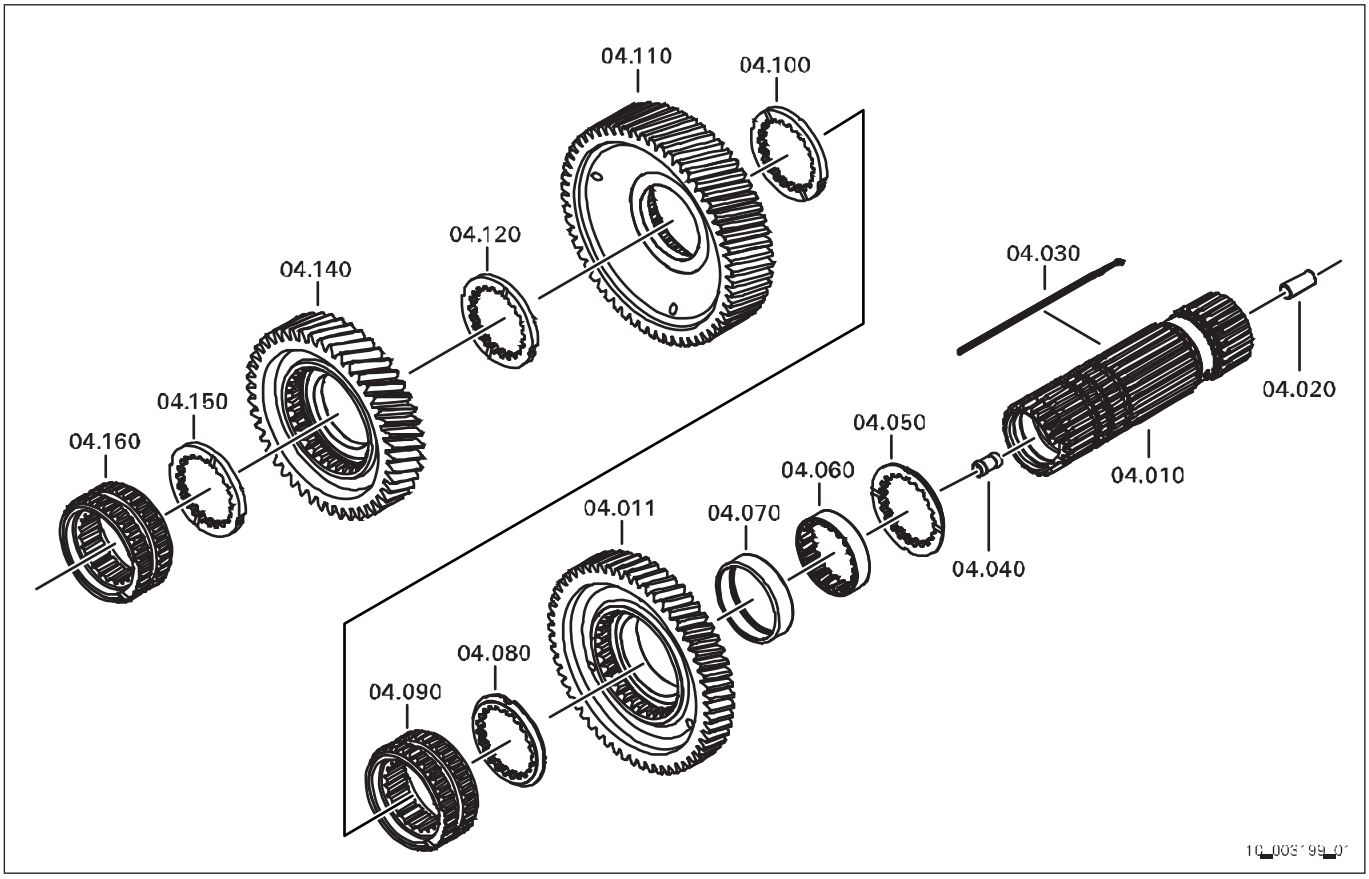

Model range 12.1

04.010 Main shaft (1)
04.011 R gear helical gear (2)
04.020 Oil tube (3)
04.030 Spline (4)
04.040 Oil tube (5)
04.050 Washer
04.060 Ring (7)
04.070 Slide ring (8)
04.080 Washer
04.090 Sliding sleeve (10)
04.100 Washer (6)
04.110 Helical gear 1st gear (11)
04.120 Washer (6)
04.140 Helical gear 2nd gear (12)
04.150 Washer (6)
04.160 Sliding sleeve (13)

The main shaft components differ for model ranges 12.1, 12.2 and 16.

Each model range is available as direct drive and overdrive version.

Model range 12.1 has no variable washer that must be measured.

1 Press oil tube **(3)** into the main shaft **(1)** using tool **1X56.138.205**.
Control dimension: Oil tube protrudes by 15^{-1} mm

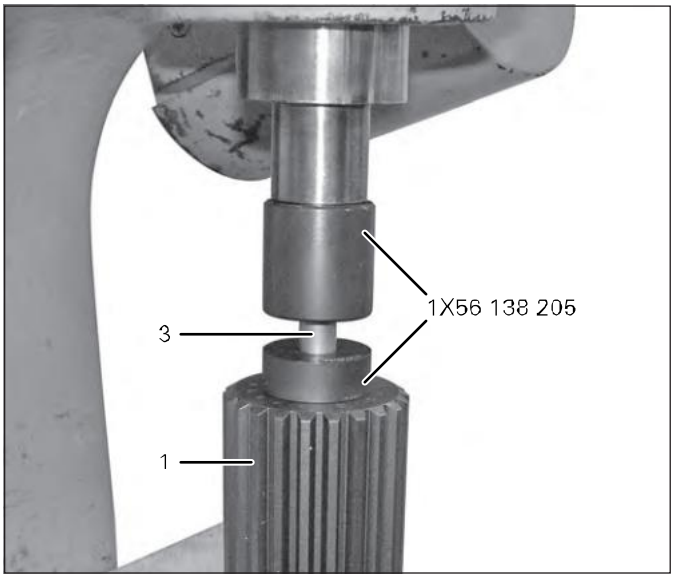

2 Insert ring **(7)** into slice ring **(8)**.

3 Place washer **04.080** onto the main shaft.
Offset washer by half a tooth.

4 Place slide ring **(8)** onto the main shaft.
The recess in the slide ring **(8)** faces towards the blind hole (see arrow) in the main shaft.

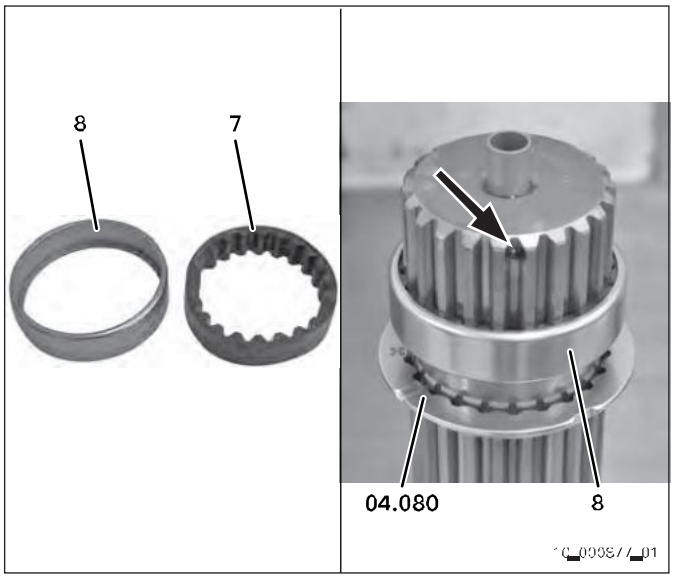

5 Press on slide ring **(8)** and washer **04.050** until firmly home at washer **04.080** using the sleeve **AA01.388.808**. The large diameter of the washer **04.050** faces towards the slide ring.

6 Remove sleeve **AA01.388.808**.

7 Offset washer **04.050** by half a tooth.

8 Remove washer **04.080**.

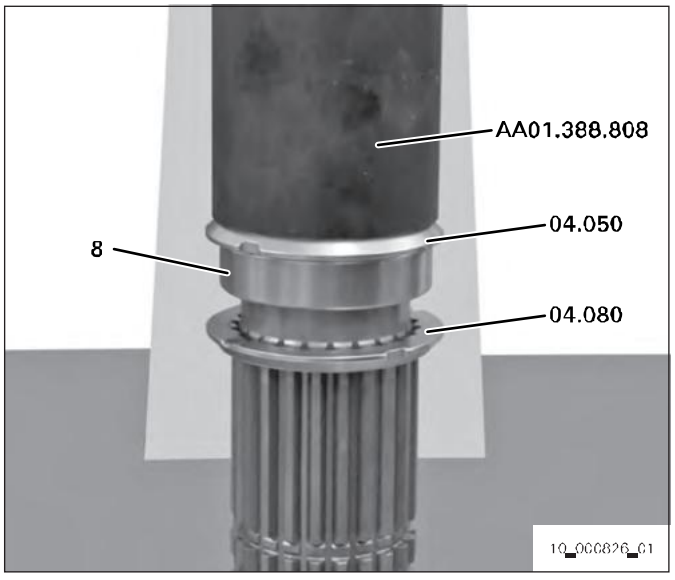

9 Rotate the main shaft by 180° and clamp it in a vise with protective chucks or, optionally, use tool **1X56.138.196**.

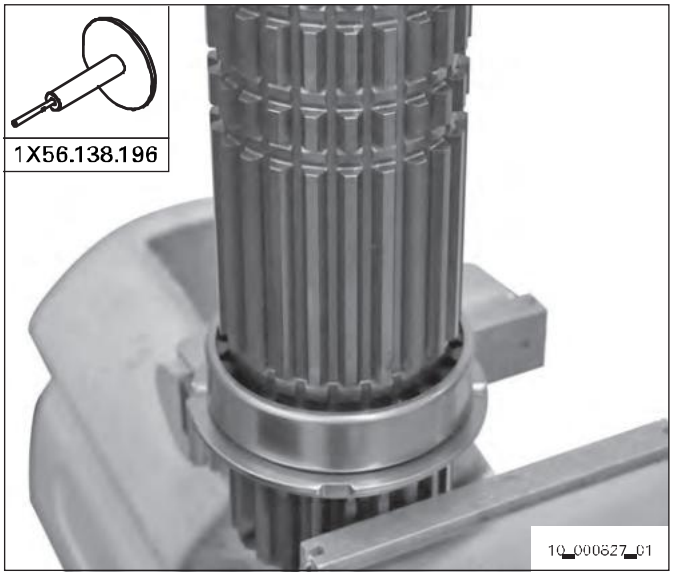

10 Insert spline **(4)** between the two teeth of the main shaft where the blind hole is located.

11 Push spline **(4)** up to the slide ring **(8)**. Slightly oil slide ring **(8)**.

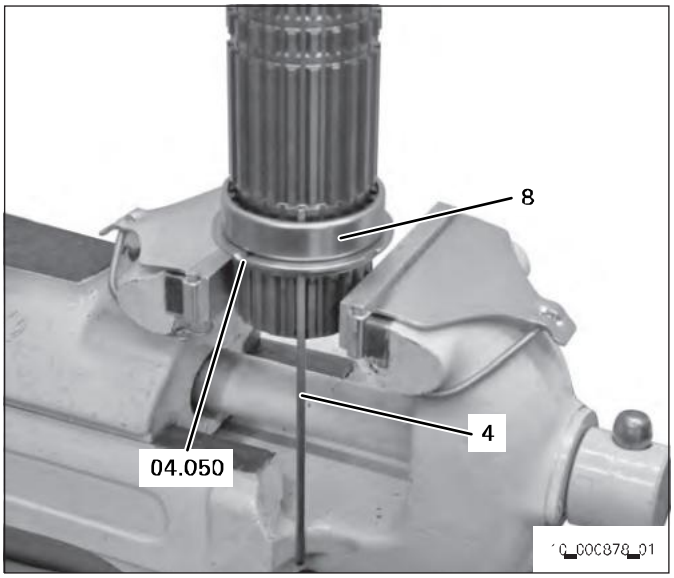

12 Place R gear helical gear **(2)** on the main shaft.

13 Put on washer with chamfer **(14)** – large diameter faces towards R gear helical gear **(2)** – and offset by half a tooth.

14 Also push on spline **(4)**.

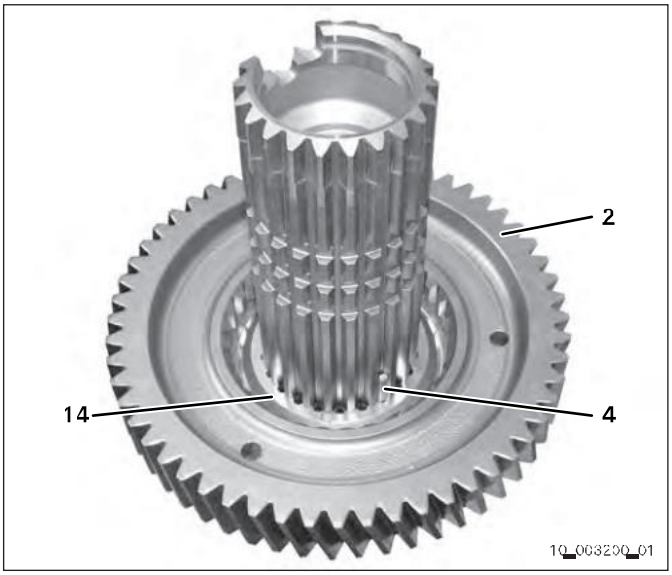

15 Fit sliding sleeve **(10)**.

16 Also push on spline **(4)**.

17 Put on washer **(6)** and offset by half a tooth.

18 Also push on spline **(4)**.

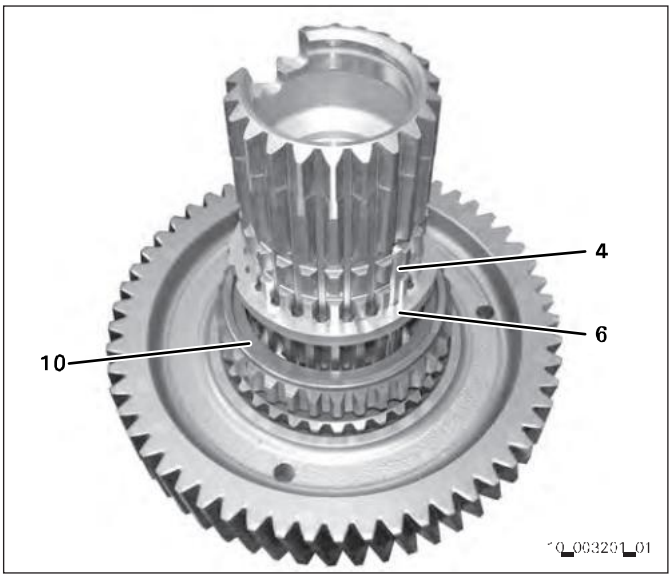

19 Put on helical gear 1st gear **(11)**.

20 Put on washer **(6)** and offset by half a tooth.

21 Also push on spline **(4)**.

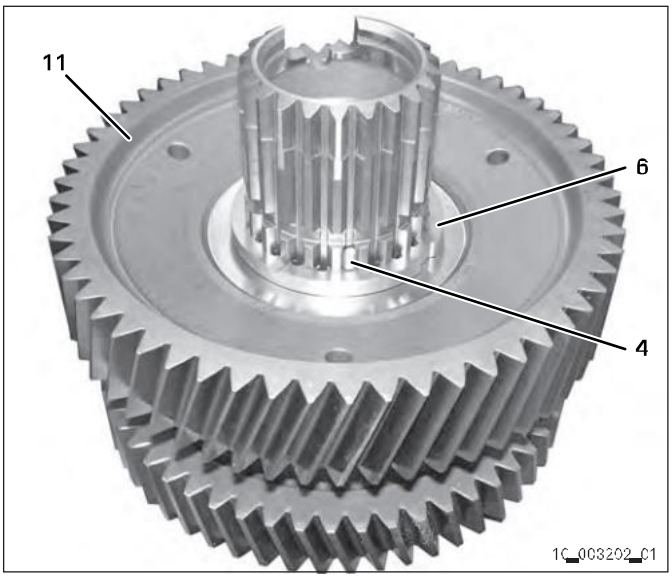

22 Put on helical gear 2nd gear **(12)**.

23 Put on washer **(6)** and offset by half a tooth.

24 Also push on spline **(4)**.

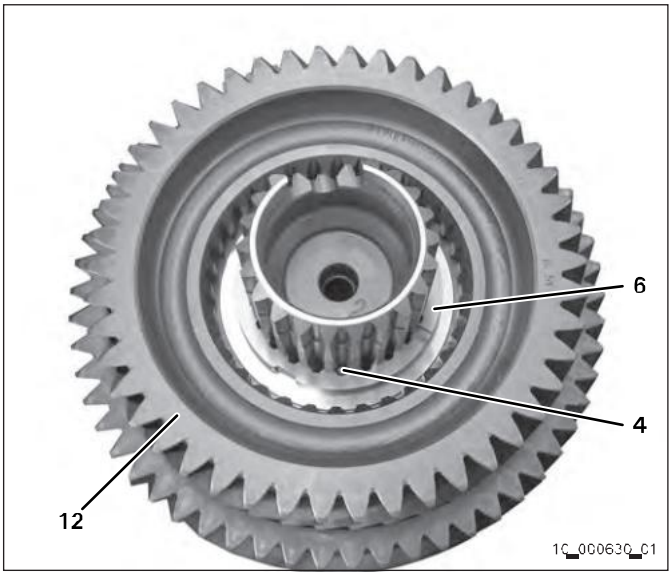

25 Fit sliding sleeve **(13)**, aligning the sliding sleeve's **(13)** groove with the recess in the main shaft **(1)**.

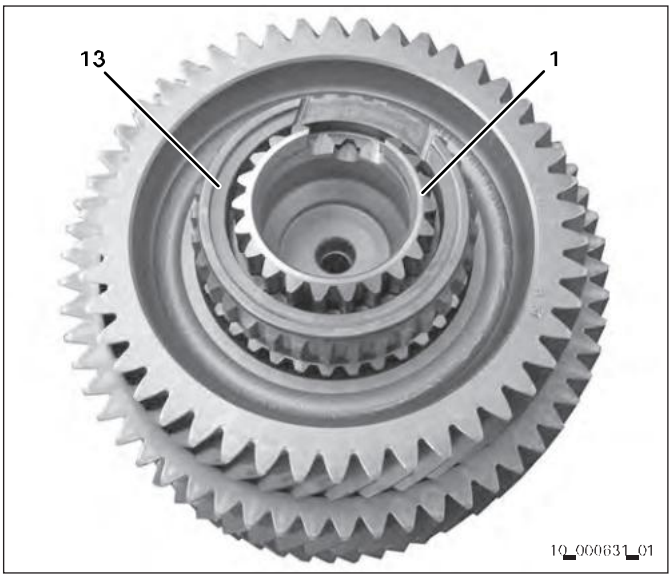

26 Insert oil tube **(5)**.

27 For installing the main shaft, refer to the corresponding chapter.

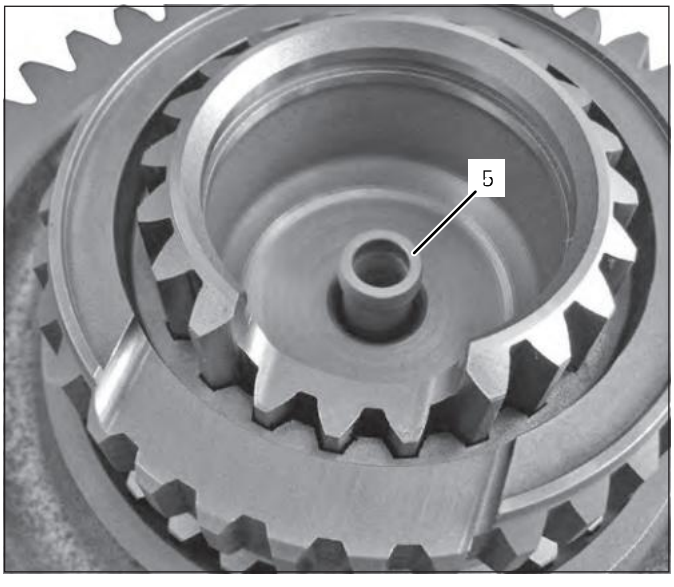

Assembling the main shaft, 12-speed, model range 12.2

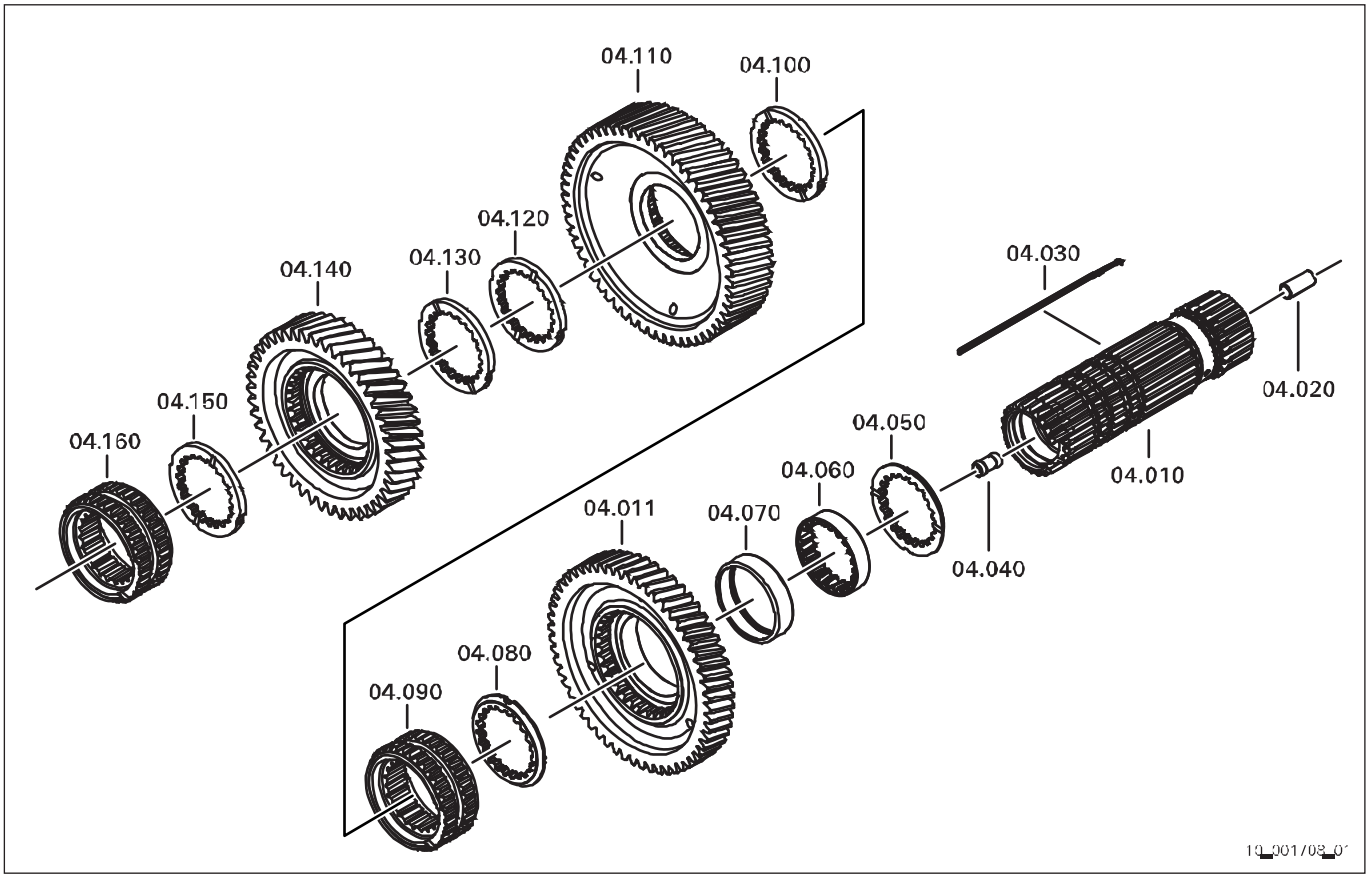

Model range 12.2

04.010 Main shaft (1)
04.011 R gear helical gear (2)
04.020 Oil tube (3)
04.030 Spline (4)
04.040 Oil tube (5)
04.050 Washer
04.060 Ring (7)
04.070 Slide ring (8)
04.080 Washer
04.090 Sliding sleeve (10)
04.100 Washer (6)
04.110 Helical gear 1st gear (11)
04.120 Variable washer (9)
04.130 Washer (6)
04.140 Helical gear 2nd gear (12)
04.150 Variable washer (9)
04.160 Sliding sleeve (13)

The main shaft components differ for model ranges 12.1, 12.2 and 16.

Each model range is available as direct drive and overdrive version.

Washer **04.130** is not used for model range 12.1.

1 Press oil tube **(3)** into the main shaft **(1)** using tool **1X56.138.205**.
Control dimension: Oil tube protrudes by 15-1 mm

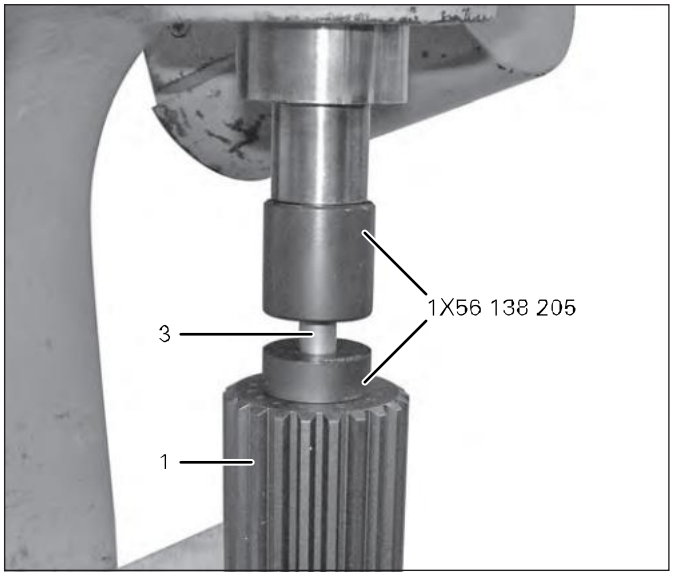

2 Insert ring **(7)** into slice ring **(8)**.

3 Place washer **04.080** onto the main shaft. Offset washer by half a tooth.

4 Place slide ring **(8)** onto the main shaft. The recess in the slide ring **(8)** faces towards the blind hole (see arrow) in the main shaft.

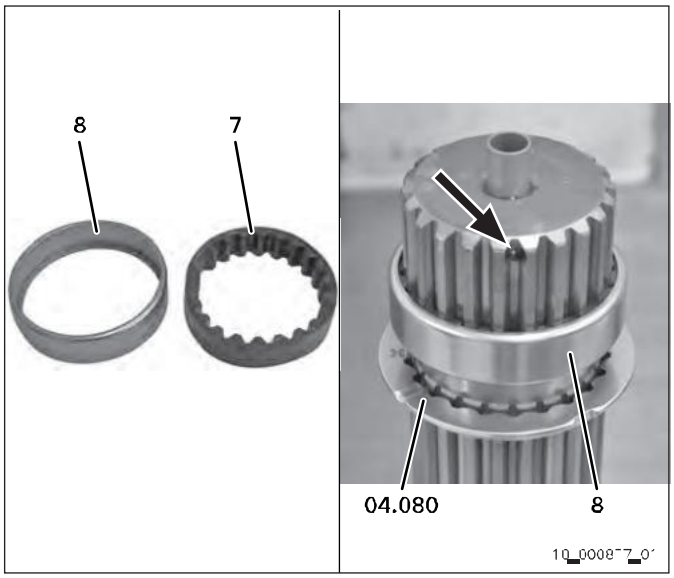

5 Press on slide ring **(8)** and washer **04.050** until firmly home at washer **04.080** using the sleeve **AA01.388.808**. The large diameter of the washer **04.050** faces towards the slide ring.

6 Remove sleeve **AA01.388.808**.

7 Offset washer **04.050** by half a tooth.

8 Remove washer **04.080**.

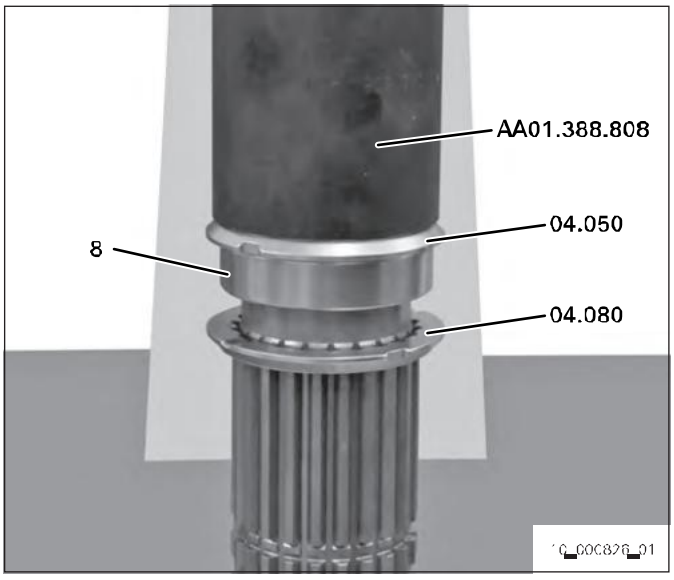

9 Rotate the main shaft by 180° and clamp it in a vise with protective chucks or, optionally, use tool **1X56.138.196**.

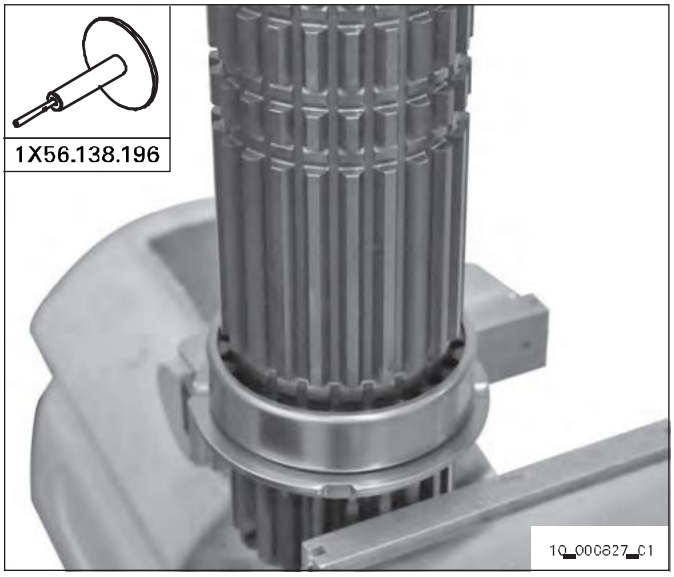

10 Insert spline **(4)** between the two teeth of the main shaft where the blind hole is located.

11 Push spline **(4)** up to the slide ring **(8)**.
Rotate the main shaft by 180° and clamp it in a vise with protective chucks or, optionally, use tool **1X56.138.196**.
Slightly oil slide ring **(8)**.

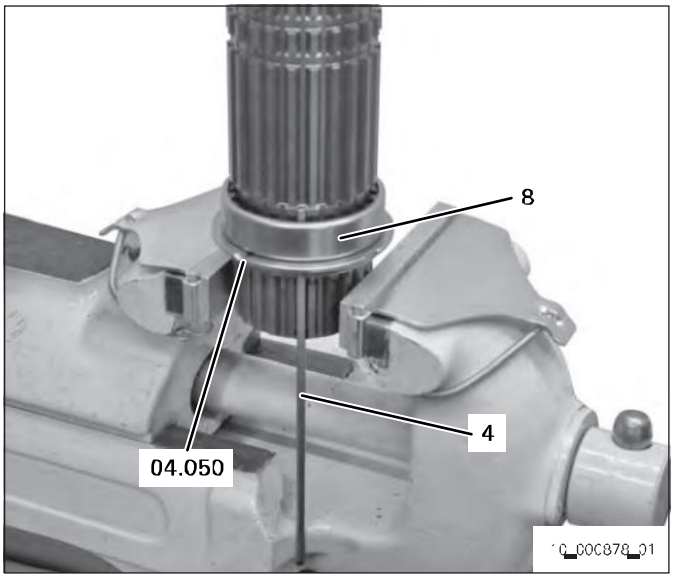

12 Place R gear helical gear **(2)** on the main shaft.

13 Put on washer with chamfer **(14)** – large diameter faces towards R gear helical gear **(2)** – and offset by half a tooth.

14 Also push on spline **(4)**.

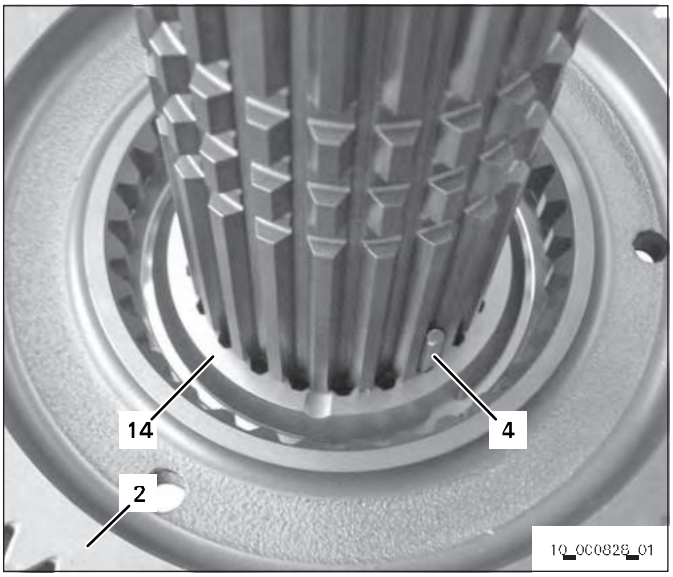

15 Fit sliding sleeve **(10)** and also push on spline **(4)**.

16 Only for model range 12.2:
Fit washer **(6)** and offset by half a tooth.

17 Also push on spline **(4)**.

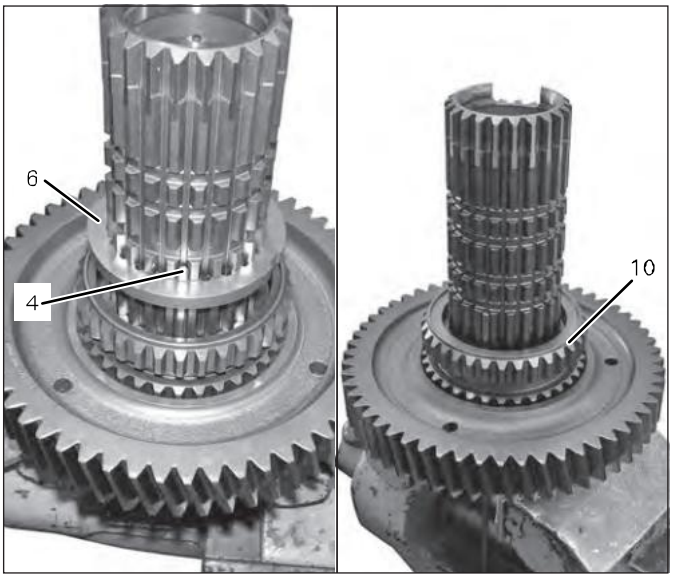

18 Put on helical gear 1st gear **(11)**.

19 Determine thickness of variable washer **(9)**. Fit measuring disk and offset by half a tooth. Determine the measuring disk's axial clearance using a feeler gage. Select variable washer **(9)** from the OTK, ensuring an axial clearance between **0.15 mm and 0.25 mm**.

20 Remove measuring disk and replace it with the selected variable washer **(9)**.

21 Offset variable washer **(9)** by half a tooth and also push on spline **(4)**.

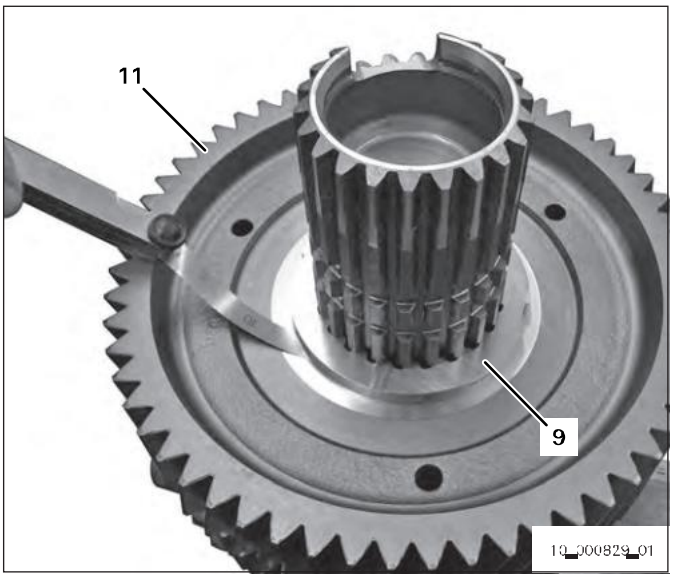

22 Fit washer **(6)** and offset by half a tooth.

23 Also push on spline **(4)**.

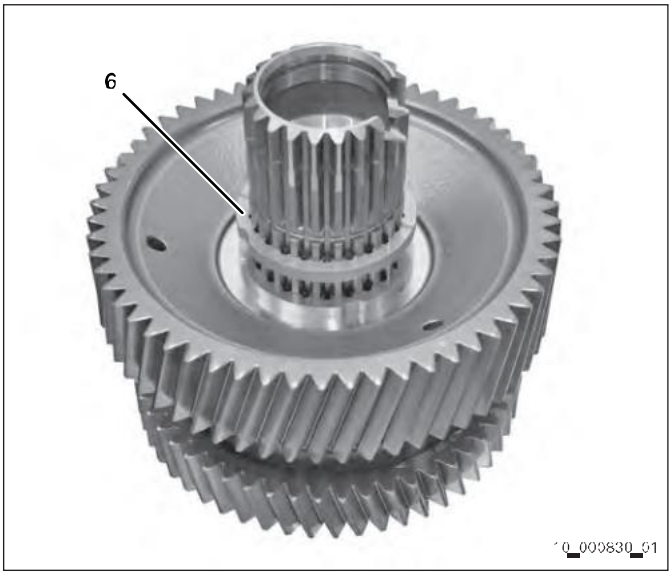

24 Put on helical gear 2nd gear **(12)**.

25 Determine thickness of variable washer **(9)**. Fit measuring disk and offset by half a tooth. Determine the measuring disk's axial clearance using a feeler gage. Select variable washer **(9)** from the OTK, ensuring an axial clearance between **0.15 mm and 0.25 mm**.

26 Remove measuring disk and replace it with the selected variable washer **(9)**.

27 Offset variable washer **(9)** by half a tooth.

28 Also push on spline **(4)**.

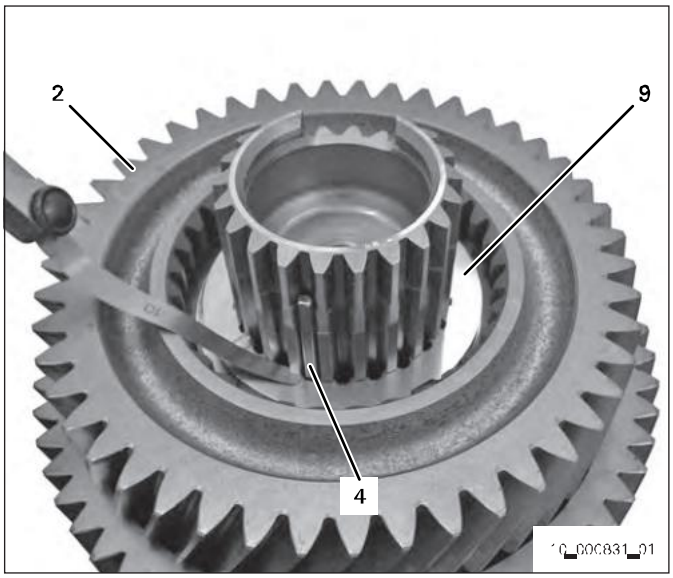

29 Snap the spline's lug **(4)** into the bore.

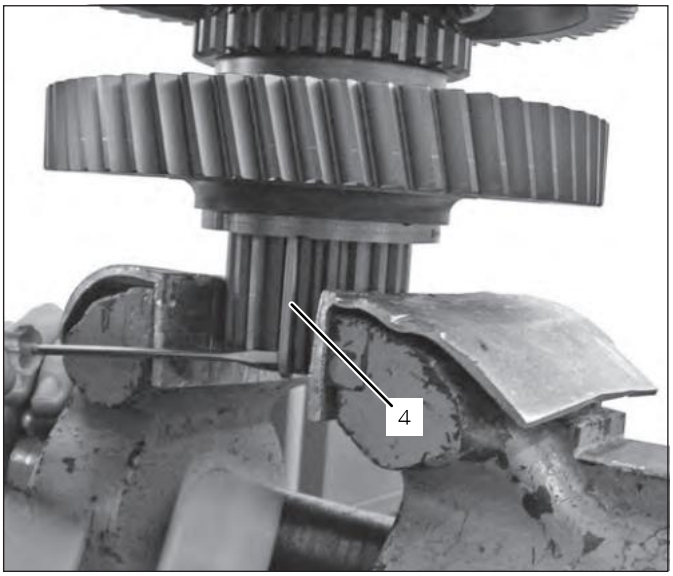

30 Fit sliding sleeve **(13)**, aligning the sliding sleeve's **(13)** groove with the recess in the main shaft **(1)**.

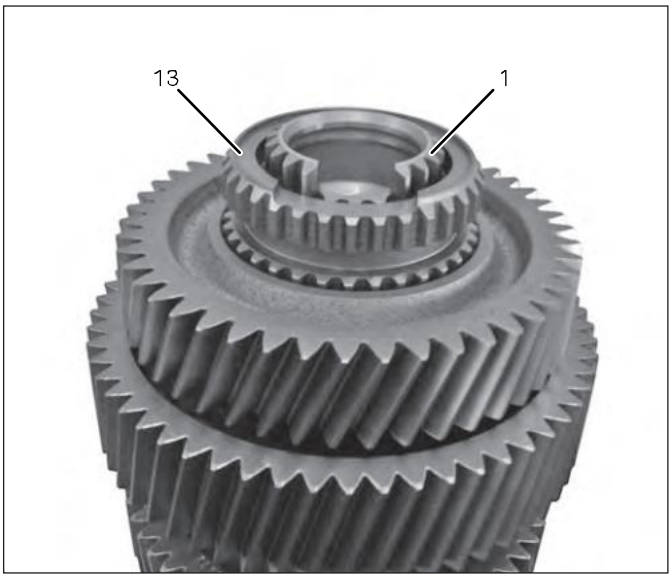

31 Insert oil tube **(5)**.

32 Install the main shaft *(refer to corresponding chapter)*.

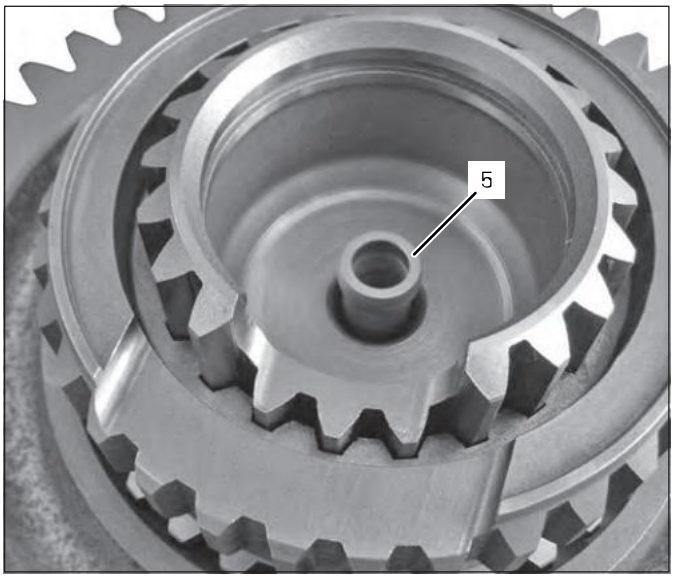

Assembling the main shaft, 16-speed

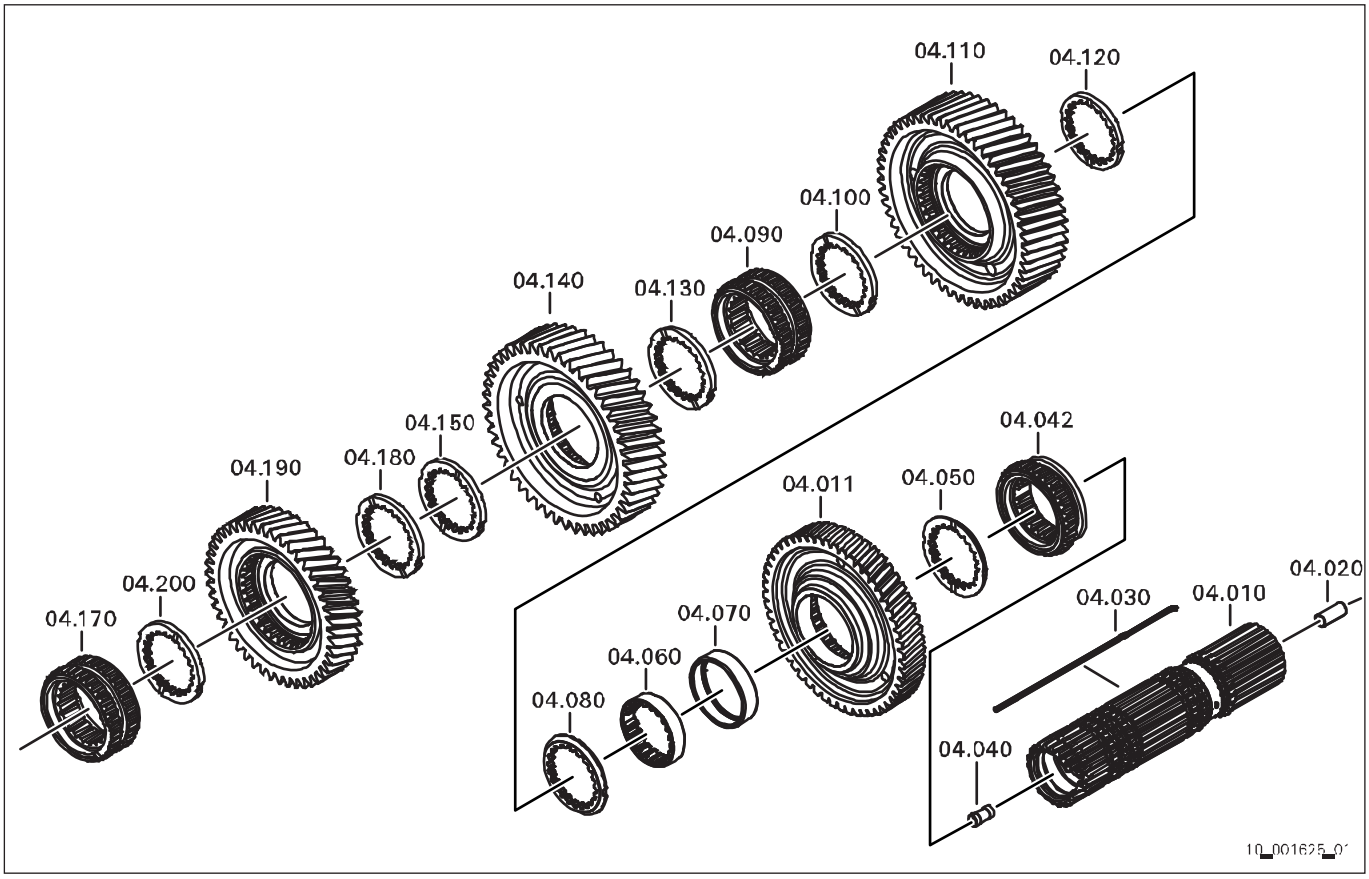

04.010 Main shaft
04.011 R gear helical gear
04.020 Oil tube
04.030 Spline
04.040 Oil tube
04.042 Sliding sleeve
04.050 Washer with chamfer
04.060 Ring
04.070 Slide ring
04.080 Washer with chamfer
04.090 Sliding sleeve
04.100 Washer
04.110 Helical gear 1st gear
04.120 Variable washer
04.130 Washer
04.140 Helical gear 2nd gear
04.150 Variable washer
04.170 Sliding sleeve
04.180 Washer
04.190 Helical gear 3rd gear
04.200 Variable washer

The main shaft components differ for model ranges 12.1, 12.2 and 16.

Each model range is available as direct drive and overdrive version.

1 Press oil tube **(3) 04.020** into main shaft **(1) 04.010** using tool **1X56.138.205**.
Control dimension: Oil tube protrudes by 15_{-1} mm

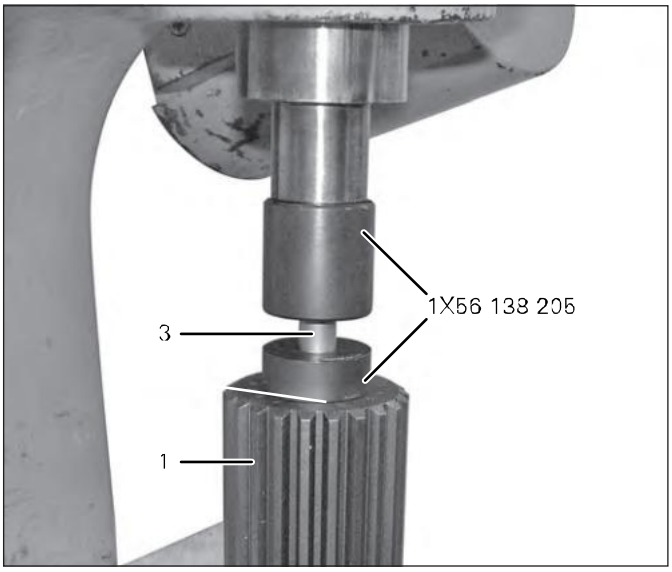

03ec26_1

2 Insert ring **(7) 04.060** into slide ring **(8) 04.070**.

3 Put washer **04.080** on the main shaft and offset by half a tooth.

4 Place slide ring **(8) 04.070** onto the main shaft. The recess (see arrow) in the slide ring **(8) 04.070** faces towards the blind hole in the main shaft.

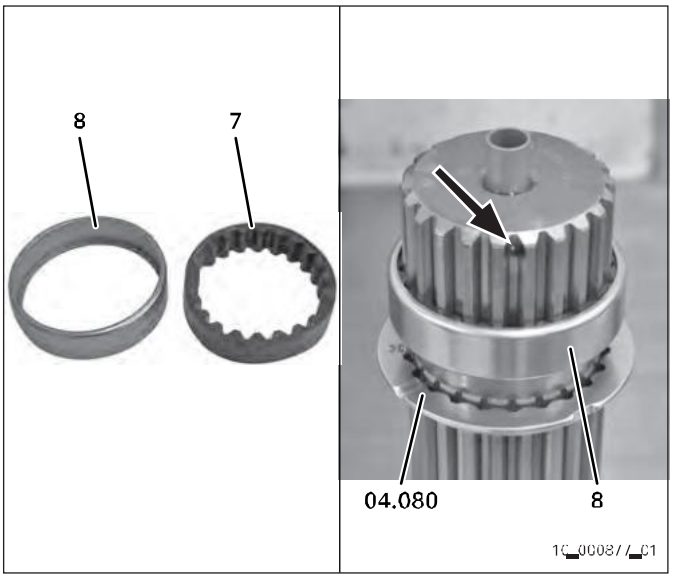

5 Press on slide ring **(8)** and washer **04.050** until firmly home at washer **04.080** using the sleeve **AA01.388.808**.
The large diameter of the washer **04.050** faces towards the slide ring.

6 Remove sleeve **AA01.388.808**.

7 Offset washer **04.050** by half a tooth.

8 Remove washer **04.080**.

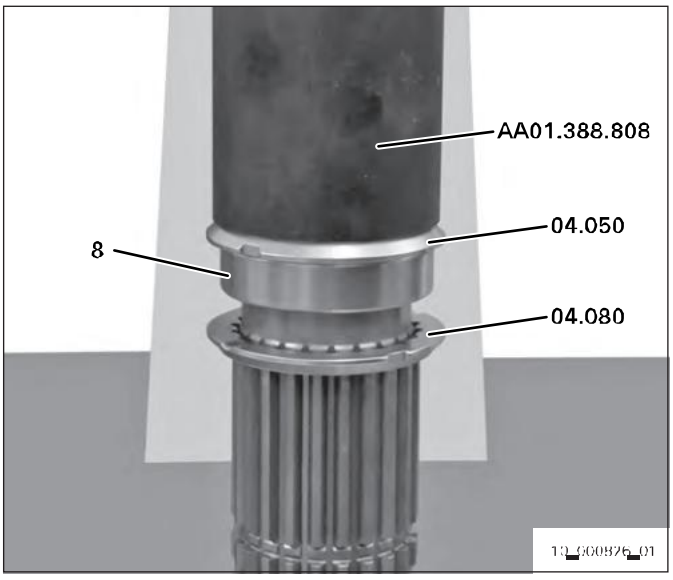

9 Rotate the main shaft **04.010** by 180° and clamp it in a vise with protective chucks or, optionally, use tool **1X56.138.196**.

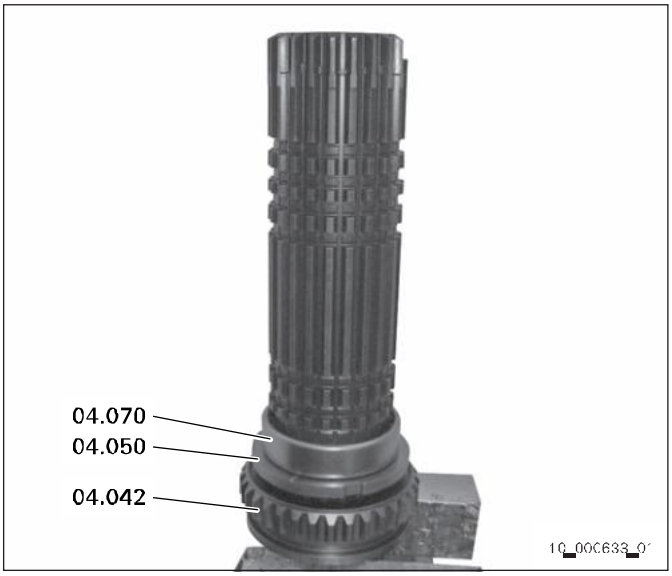

Using tool 1X56.138.196

- Position sliding sleeve **04.042** on the tool **1X56.138.196**.
- **Install sliding sleeve 04.042 in the end, once the spline has been snapped into the blind hole. Observe the following:**
  - Position the sliding sleeve's **04.042** recess above the spline.

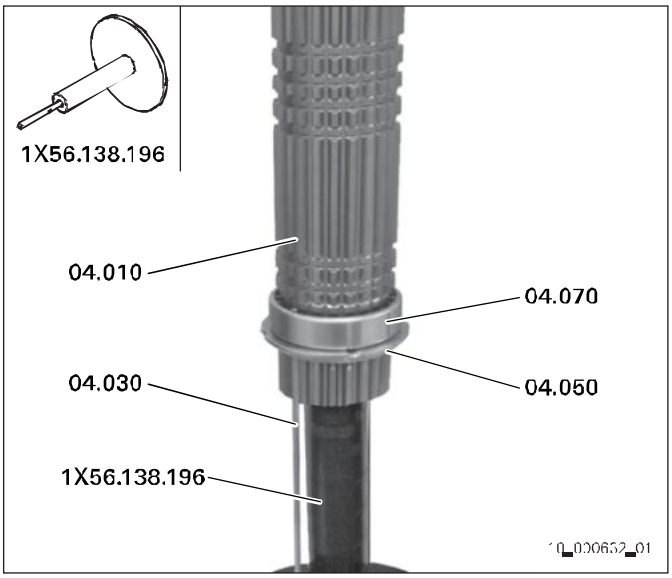

10 Insert spline **04.030**.
The spline **04.030** is guided between the two teeth of the main shaft **04.010**, where the blind hole is also located.

11 Push spline **04.030** up to the slide ring **04.070**.
Slightly oil slide ring **04.070**.

12 Place R gear helical gear **04.011** on the main shaft.

13 Put on washer with chamfer **04.080** – large diameter faces towards R gear helical gear **04.011** – and offset by half a tooth.

14 Also push on spline **04.030**.

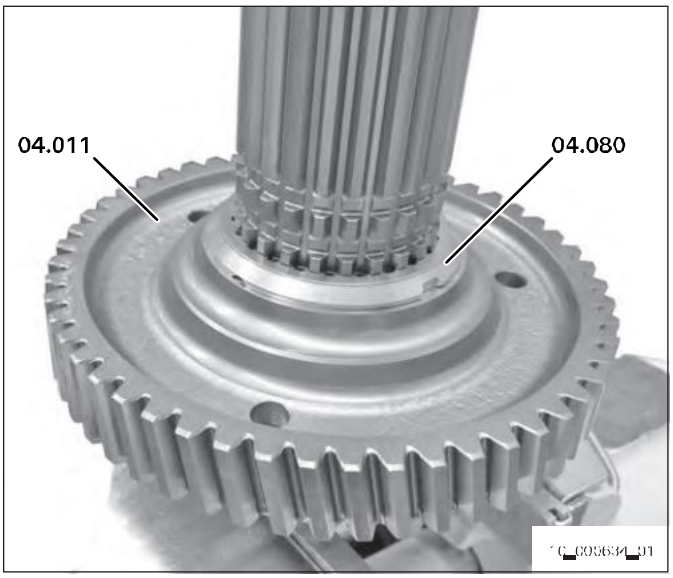

15 Fit measuring disk instead of washer **04.120** and offset by half a tooth.

16 Also push on spline.

17 For measuring, place helical gear 1st gear **04.110**, laterally reversed, onto the main shaft.

18 Determine axial clearance.
Offset washer **04.100** by half a tooth.
Determine thickness of the variable washer **04.120** using a feeler gage. Select variable washer from the spare parts catalog, ensuring an axial clearance between **0.15 mm and 0.25 mm**.

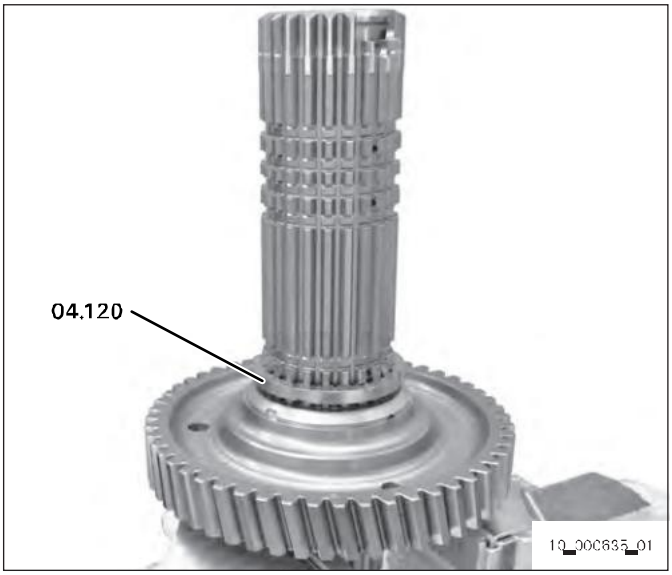

19 Remove washer **04.100,** helical gear 1st gear **04.110** and measuring disk from the main shaft.

20 Fit the selected variable washer **04.120** and offset by half a tooth.

21 Place helical gear 1st gear **04.110** onto main shaft in correct installation position.

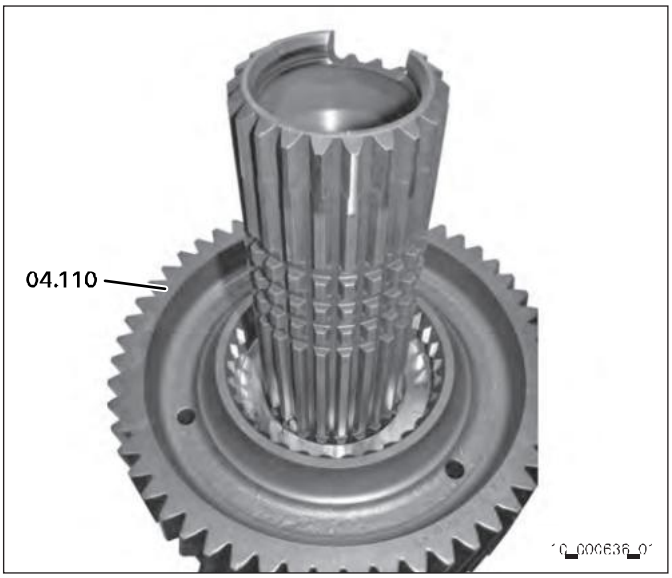

22 Put on washer **04.100** and offset by half a tooth.

23 Also push on spline.

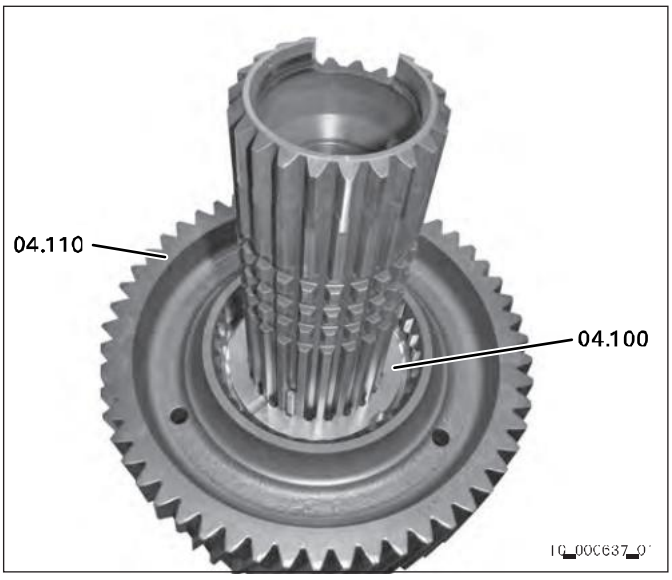

24 Fit sliding sleeve **04.090** and also push on spline.

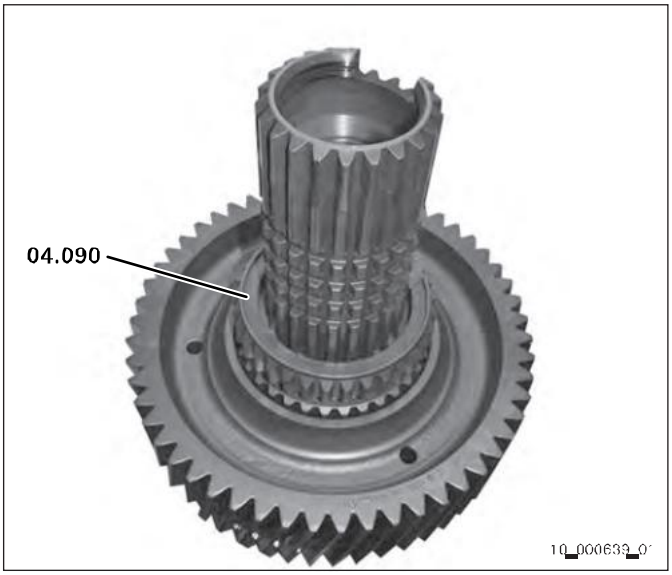

25 Fit washer **04.130** and offset by half a tooth. Also push on spline.

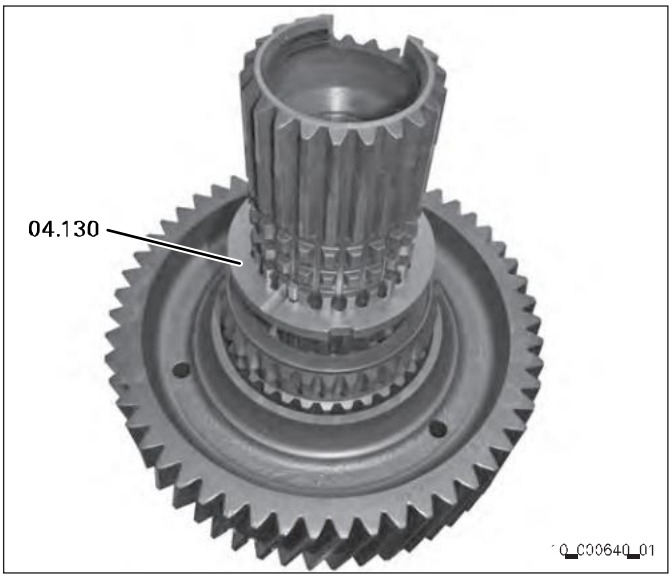

26 Put on helical gear 2nd gear **04.140**.

27 Determine axial clearance.
Fit measuring diskand offset by half a tooth.
Determine thickness of the variable washer **04.150** using a feeler gage. Select variable washer from the spare parts catalog, ensuring an axial clearance between **0.15 mm and 0.25 mm**.

28 Remove measuring disk and replace it with the selected variable washer **04.150**.

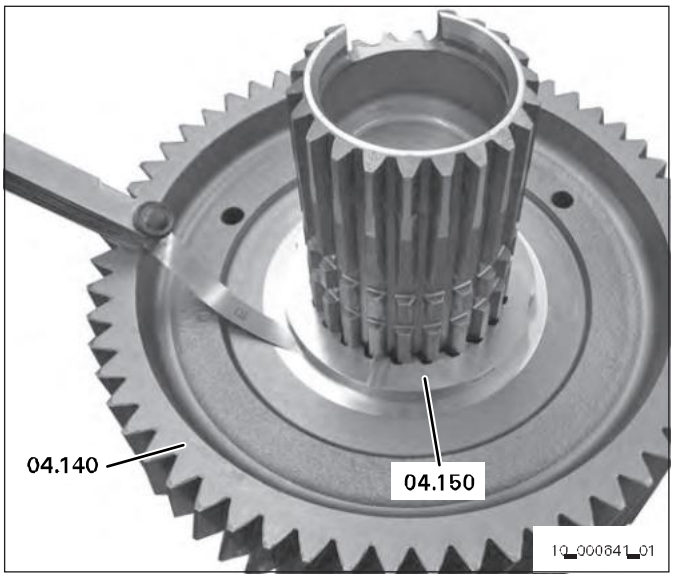

29 Offset variable washer **04.150** by half a tooth.

30 Also push on spline.

31 Fit washer **04.180** and offset by half a tooth.

32 Also push on spline.

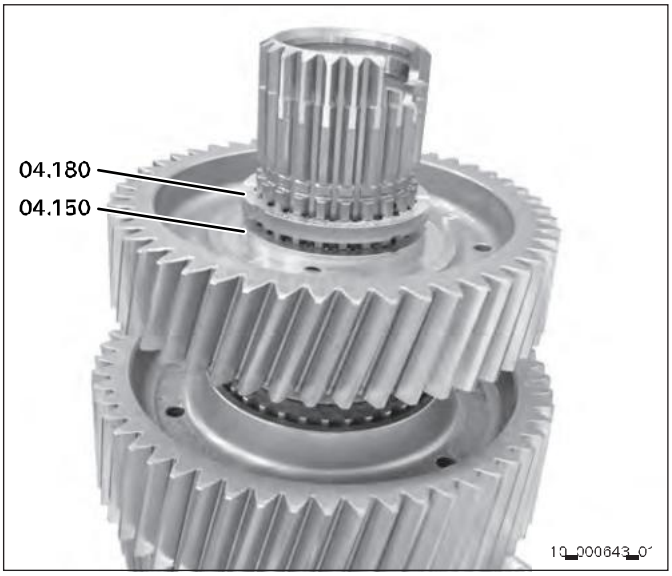

33 Put on helical gear 3rd gear **04.190**.

34 Determine axial clearance.
Fit measuring diskand offset by half a tooth.
Determine thickness of the variable washer **04.200** using a feeler gage. Select variable washer from the spare parts catalog, ensuring an axial clearance between **0.15 mm and 0.25 mm**.

35 Remove measuring disk and replace it with the selected variable washer **04.200**.

36 Offset variable washer **04.200** by half a tooth.

37 Also push on spline.

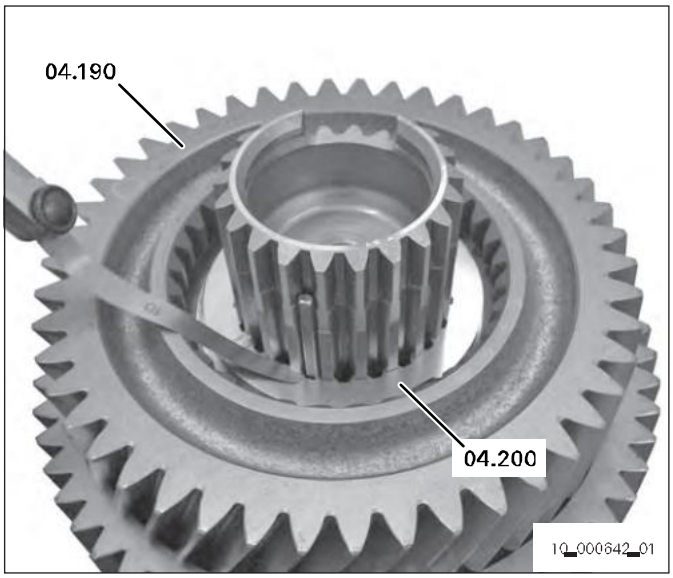

38 Snap the spline's **04.030** lug into the bore.

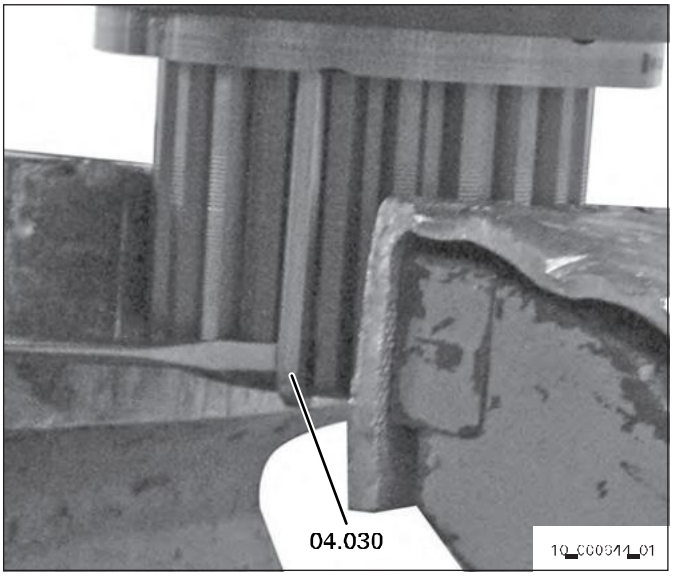

39 Fit sliding sleeve **04.170**, aligning the sliding sleeve's groove with the recess in the main shaft.

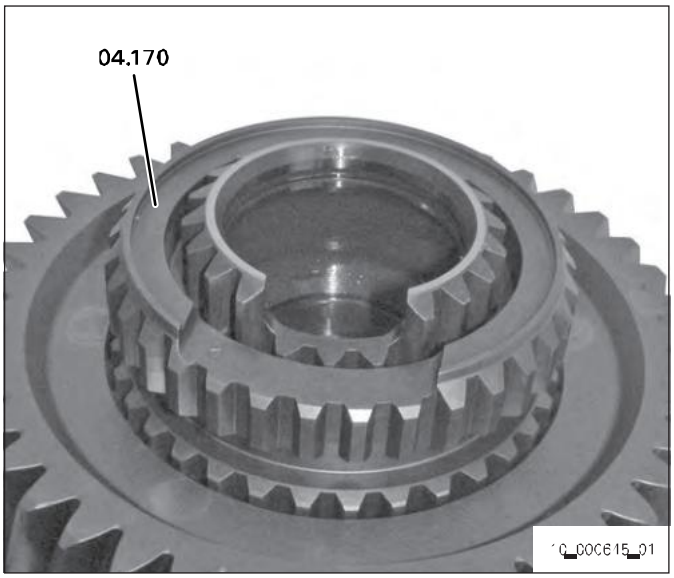

40 Insert oil tube **(5) 04.040**.

41 Install the main shaft *(refer to corresponding chapter)*.

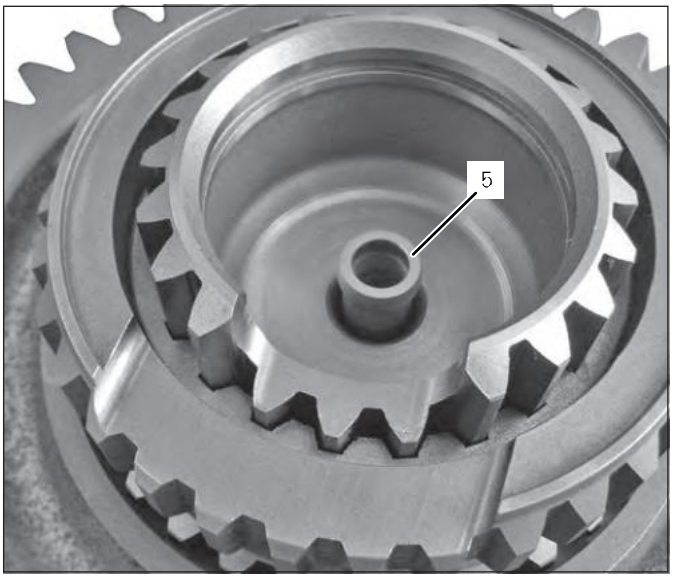

Assembling the synchronizer unit

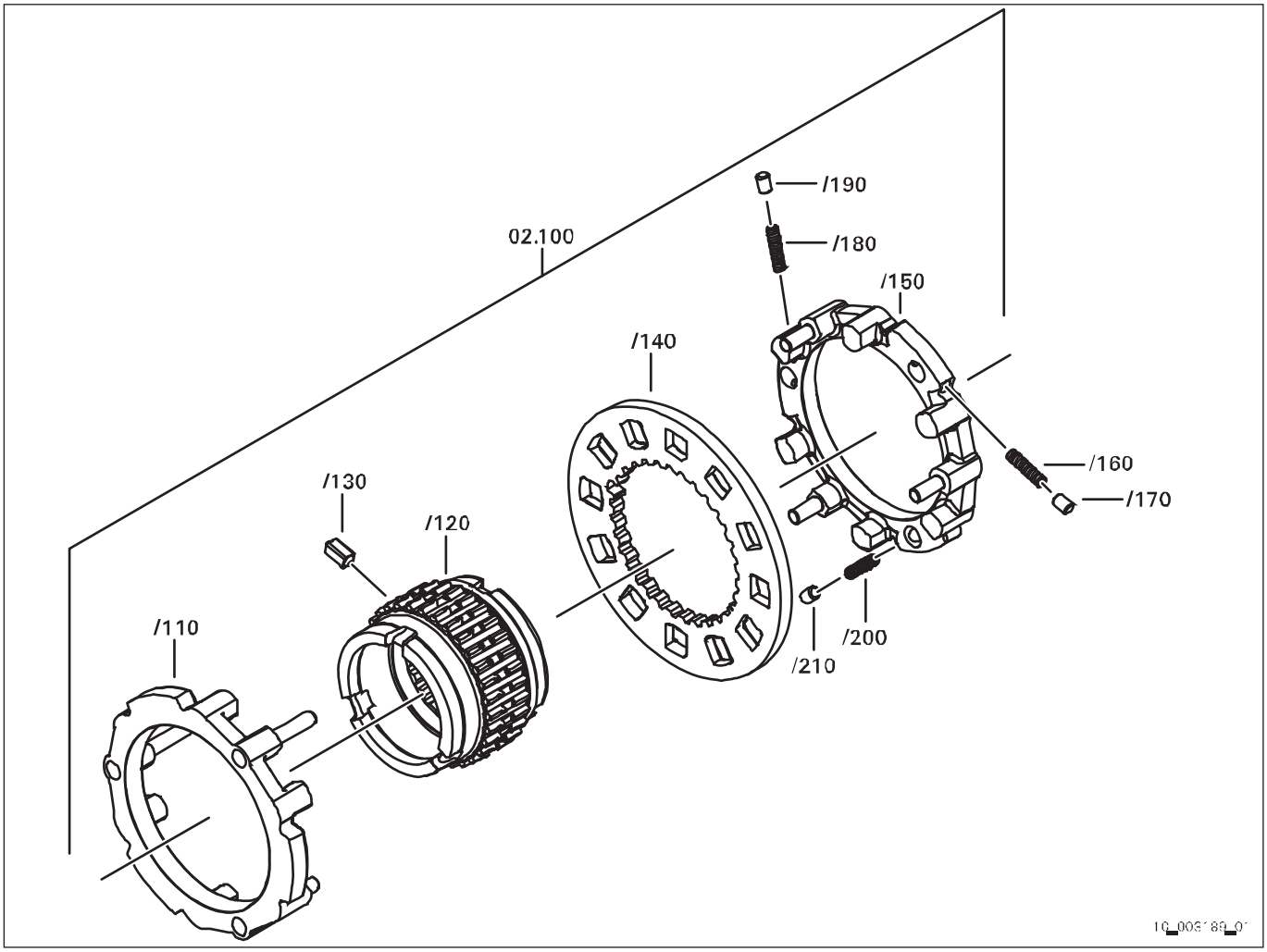

Direct drive

02.100	Synchronizer unit
/110	Synchronizer ring constant 1 [K1]
/120	Sliding sleeve
/130	Bolt
/140	Plate
/150	Synchronizer ring constant 2 [K2]
/160	Compression spring
/170	Cylindrical roller
/180	Compression spring
/190	Cylindrical roller
/200	Compression spring
/210	Cylindrical roller

In the event of a repair, synchronizer rings /110, /150 and plate /140 must always be replaced in sets.

If required, compare the synchronizer ring **/150** part number with the spare parts catalog.
Example:

Overdrive	Direct drive
1358.302.272*	1358.302.271*

* depending on parts list [BoM] version

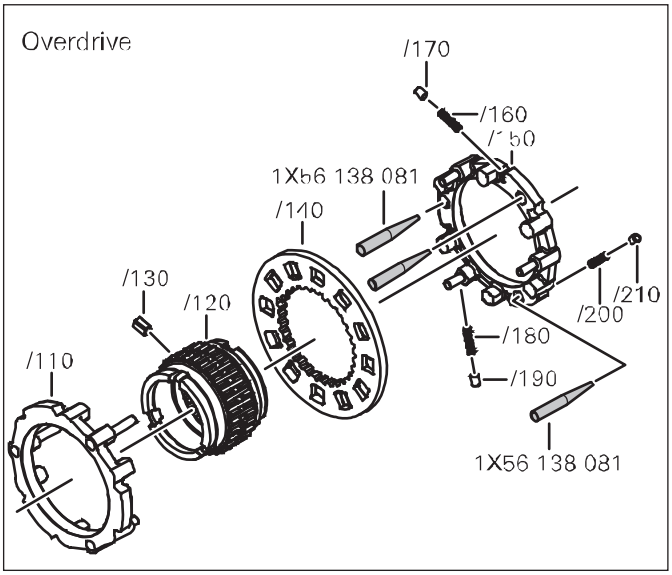

03ee3/_3

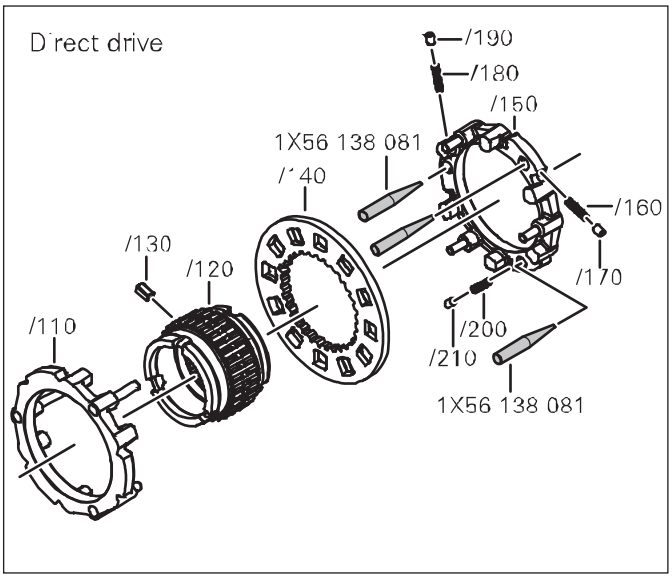

035387_1

1 Place plate **/140** onto sliding sleeve **/120** and offset by half a tooth.

2 The bore in the sliding sleeve **/120** must be aligned with the recess in the plate **/140**. Guide bolt **/130** through the sliding sleeve bore until stopped by the recess in the plate **/140**.

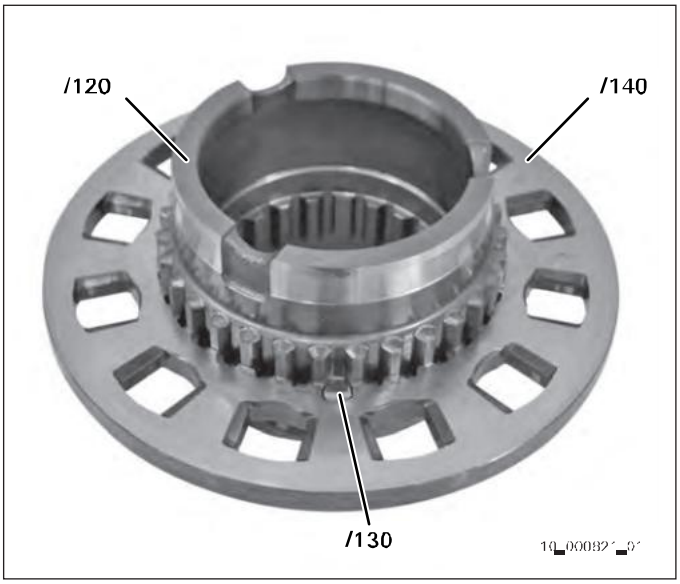

1358_240
2017-03

3 Insert compression springs **/160, /180, /200** and cylindrical rollers **/170, /190, /210** into the bores of the synchronizer ring **/150** and secure with assembly sleeves **1X56.138.081**.



4 Place the completed sliding sleeve **/120** with the plate **/140** onto synchronizer ring K1 **/110**.

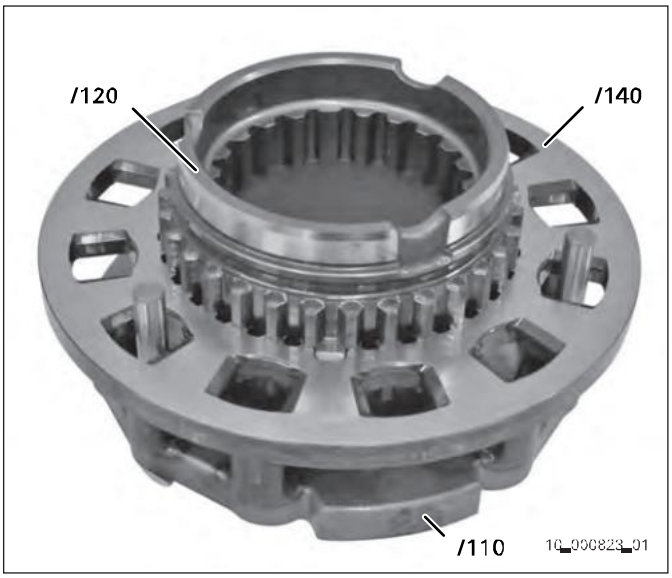

5 Place synchronizer ring K2 **/150** with the three assembly sleeves **1X56.138.081** onto the pins of synchronizer ring K1 **/110**.

6 Evenly press together synchronizer rings.

7 While removing the assembly sleeves **1X56.138.081** press down the synchronizer ring K2 **/150**.

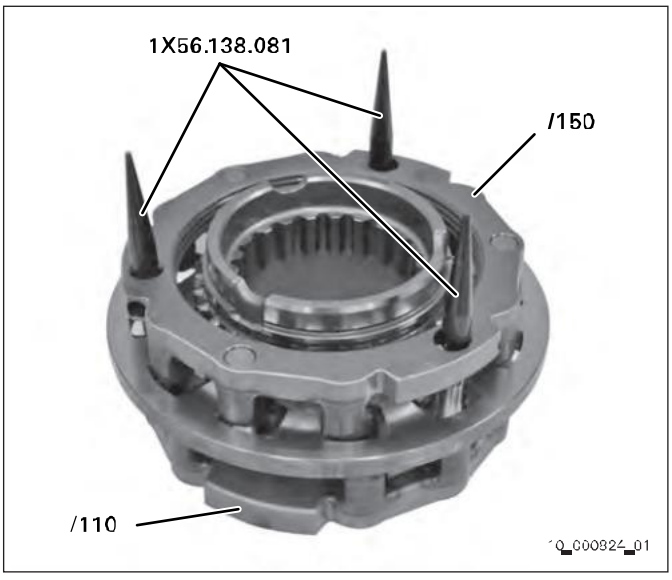

8 If necessary, shift synchronizer unit in central position: Press synchronizer ring **/150** downwards and pull up plate **/140**.

9 Check if the bolt **/130** is still in the sliding sleeve **/120**.

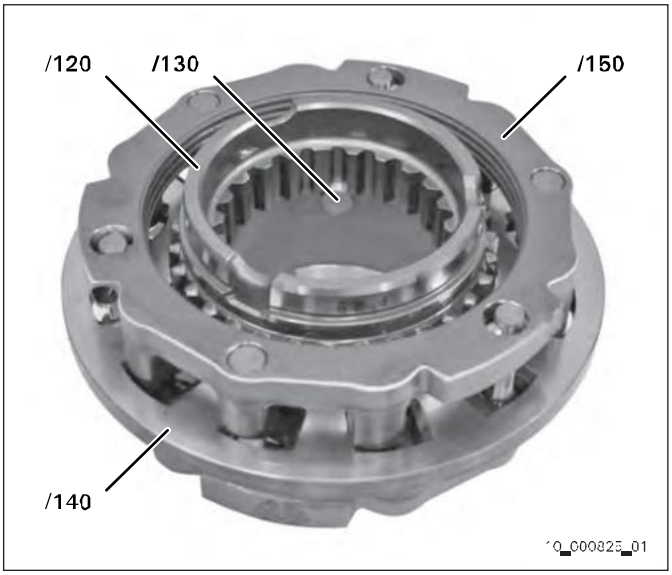

Assembling the input shaft

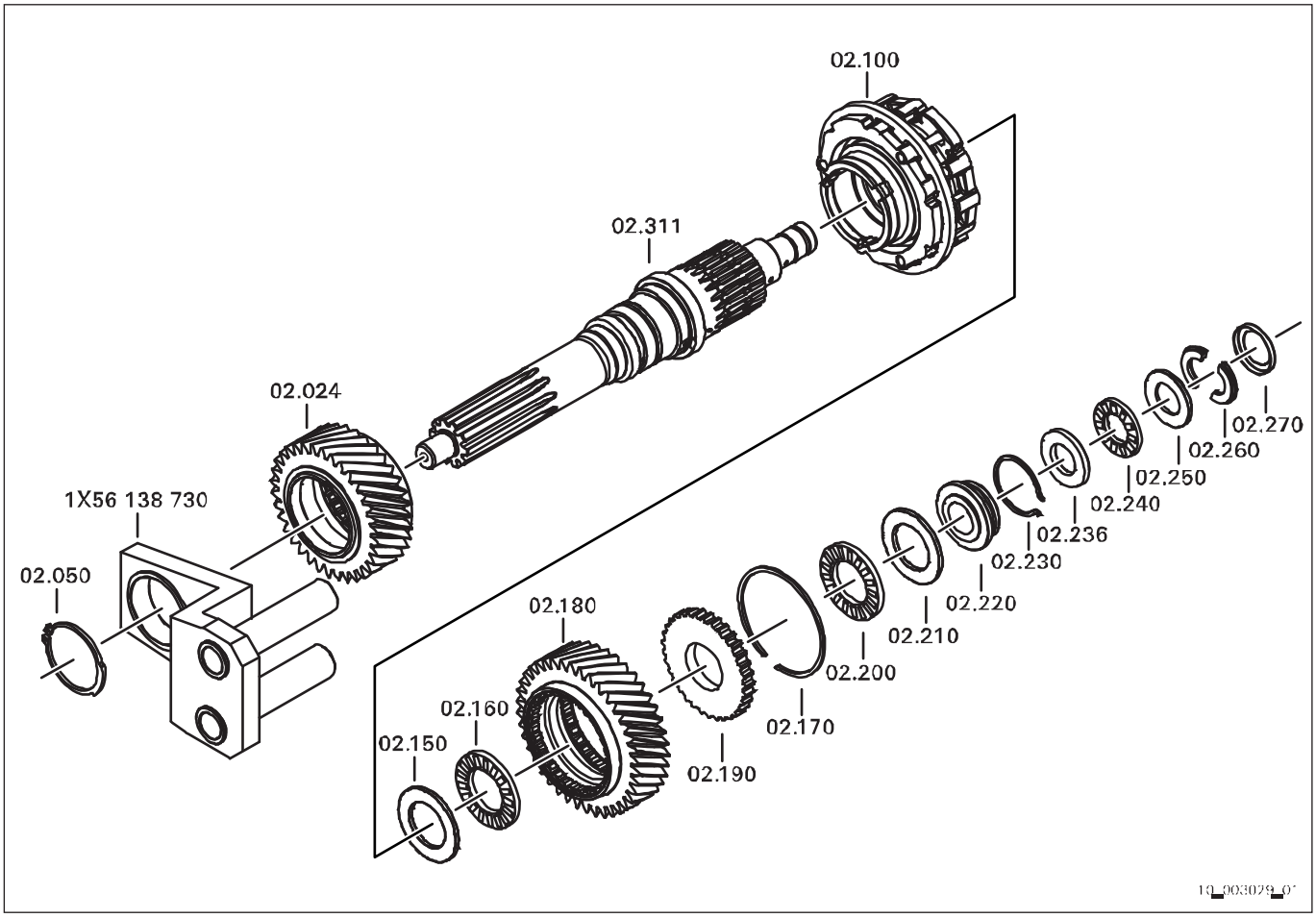

02.024 Helical gear [constant 1]
02.050 Securing ring
02.100 S/G synchronizer unit
02.150 Washer
02.160 Axial roller cage
02.170 Snap ring
02.180 Helical gear [constant 2]
02.190 Bearing washer
02.200 Axial roller cage
02.210 Washer
02.220 Bearing ring
02.230 Locking ring
02.236 Shaft washer
02.240 Axial roller cage
02.250 Washer
02.260 Split ring
02.270 Securing ring
02.311 Input shaft

Fasier assembly: Clamp input shaft in a vise with protective chucks.

1 Place helical gear constant 1 **02.024** onto the input shaft.

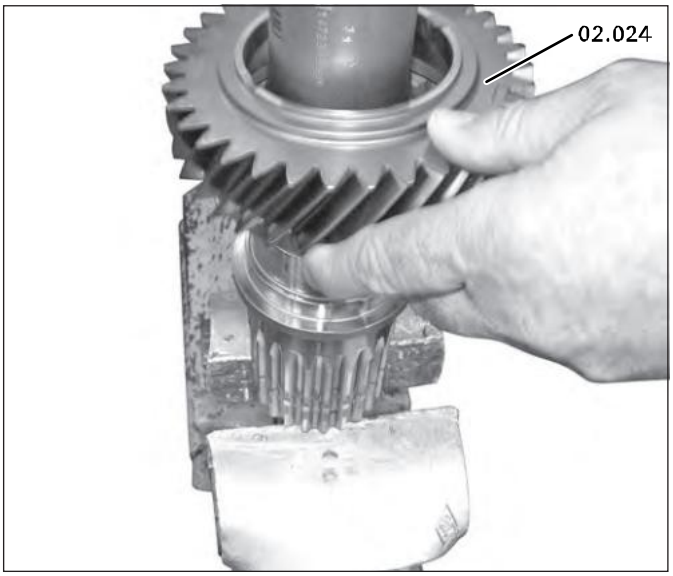

2 Place fixture **1X56.138.730** over the input shaft onto helical gear constant 1 **02.024** and secure with securing ring **02.050**.

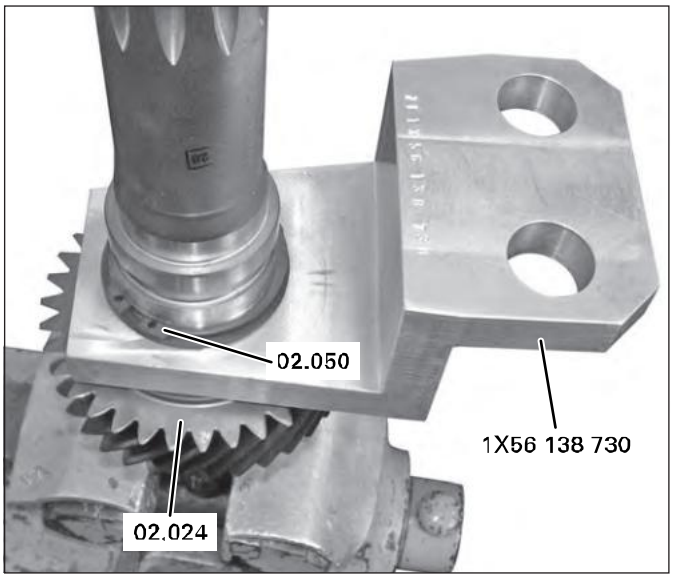

3 Rotate the input shaft by 180°.

Easier assembly: Clamp input shaft in a vise with protective chucks.

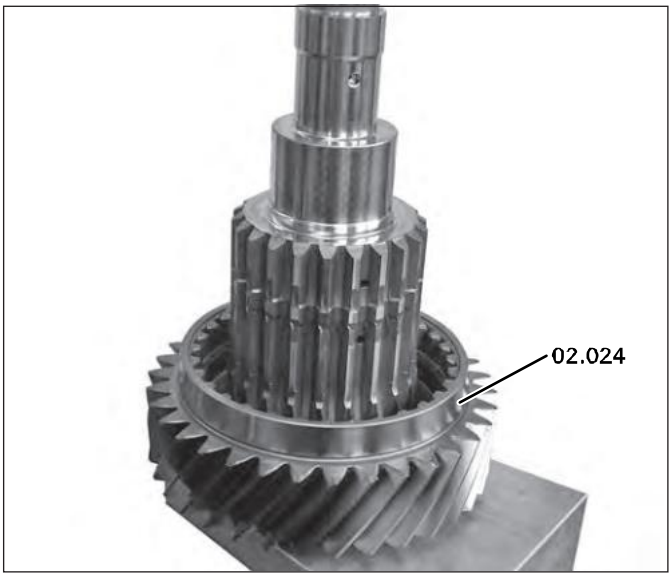

4 Place the synchronizer unit **02.100** onto the input shaft with the longer collar facing downward.

The cylindrical rollers **/250** of the synchronizer unit face towards the main shaft.

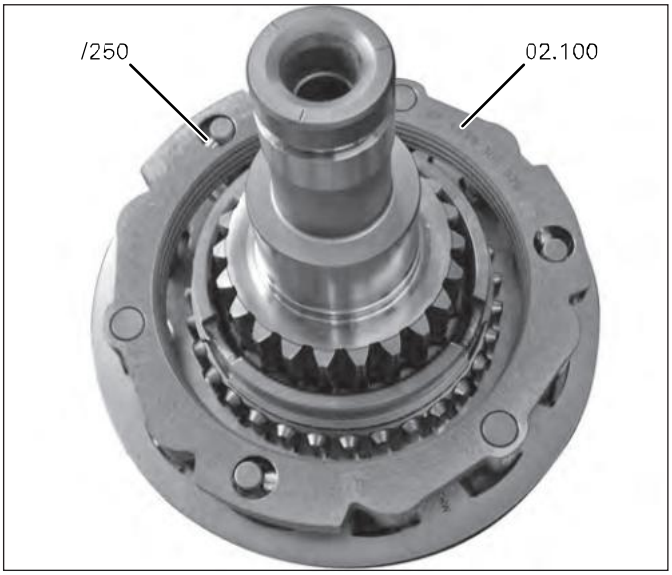

035962

5 Place washer **02.150** on input shaft.

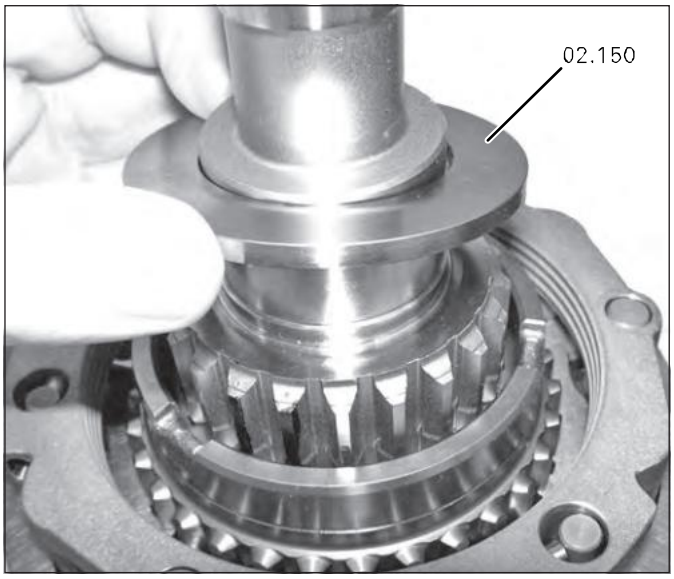

035963

6 Lightly oil axial roller cage **02.160** and place onto washer.

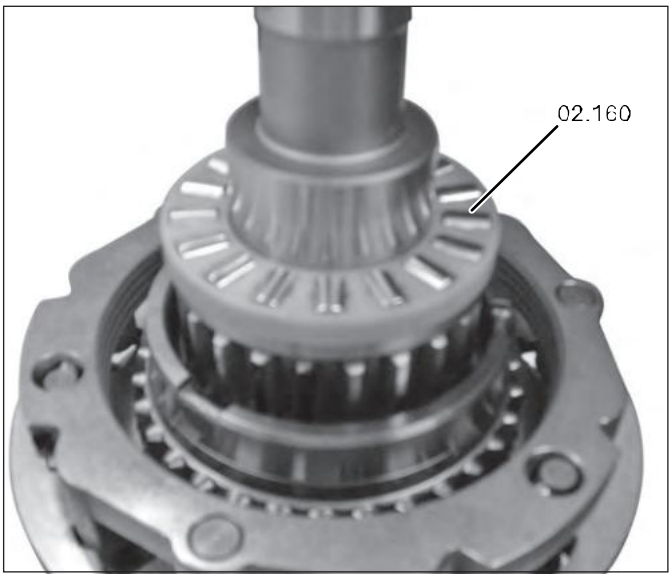

035964

7 Set the axial clearance of the bearing disk **02.190** to between **0 and 0.10 mm** with the help of the snap ring **02.170**. Use a feeler gage for measuring.
Select the respective snap ring according to the spare parts catalog.

8 Insert bearing washer **02.190** and snap ring **02.170** into helical gear constant 2 **02.180**.

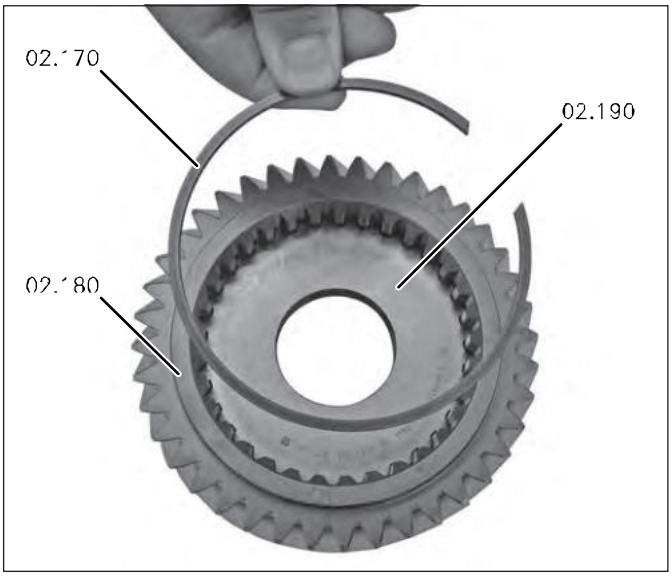

035965_1

9 Place helical gear constant 2 **02.180** onto the input shaft.



035966_1

10 Lightly oil axial roller cage **02.200** and put on input shaft.

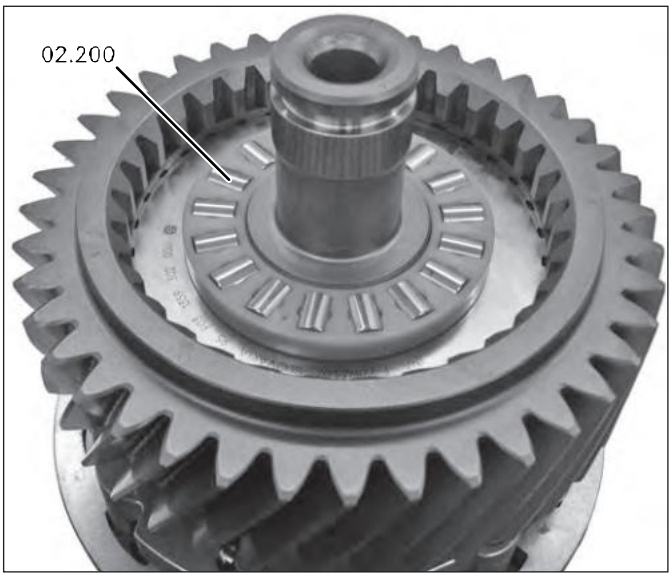

035967_1

1358_260
2017-03

11 Place washer **02.210** onto axial roller cage.

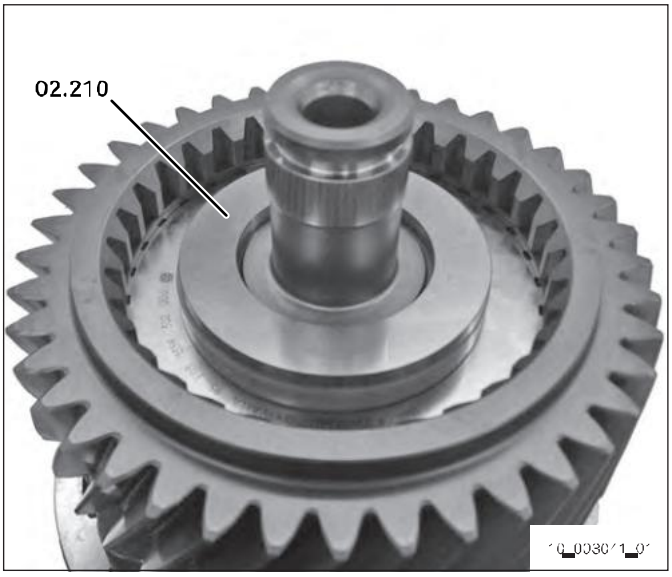

12 Snap securing ring **02.230** into the bearing ring **02.220**.

13 Place bearing ring **02.220** onto the input shaft.

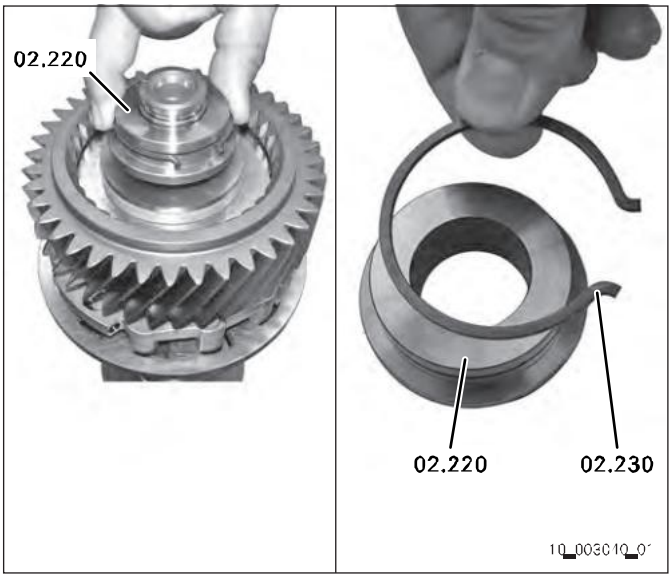

14 Place shaft washer **02.236** onto the bearing ring.

Observe the following:

- Do not confuse the thinner shaft washer **02.236** with the thicker washer **02.250**. The washer thickness is:
  4 mm for the shaft washer **02.236**
  6 mm for the shaft washer **02.250**

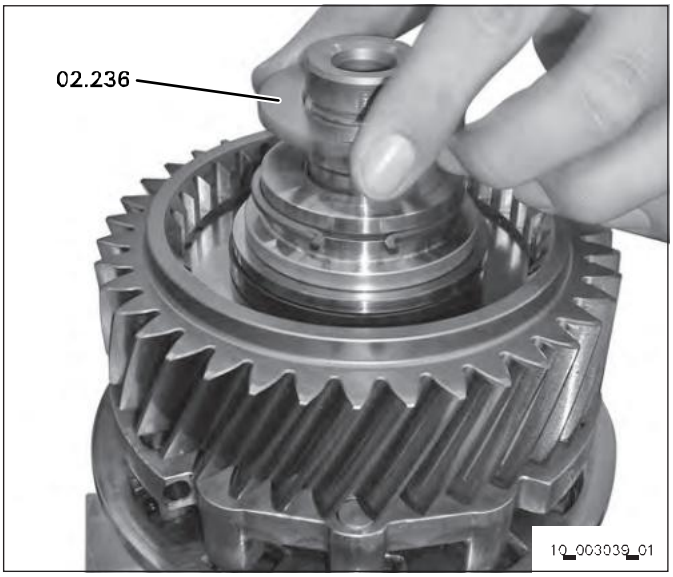

15 Lightly oil axial roller cage **02.240** and place onto shaft washer.

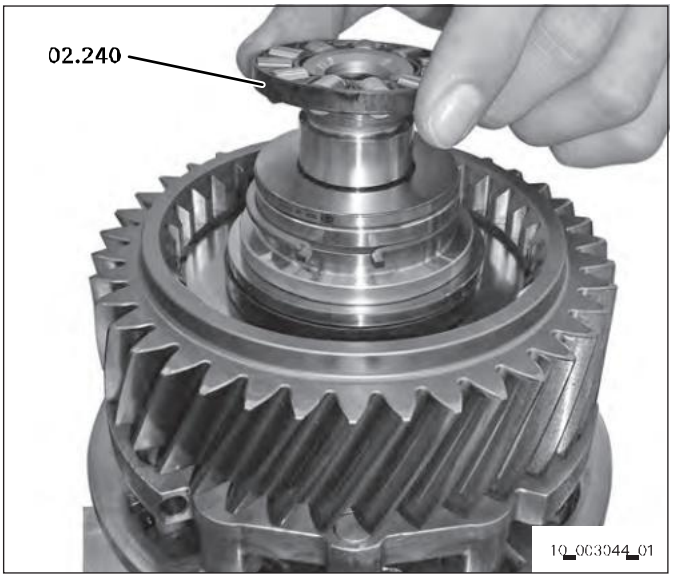

16 Place washer **02.250** onto axial roller cage.

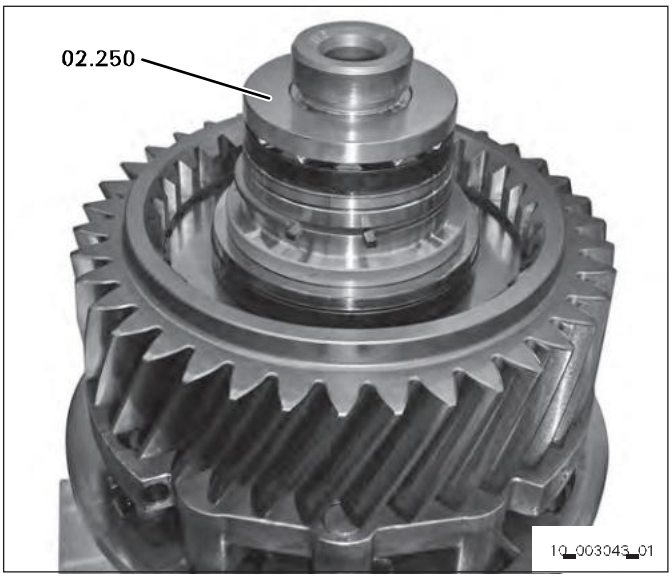

17 Insert split ring **02.260**.

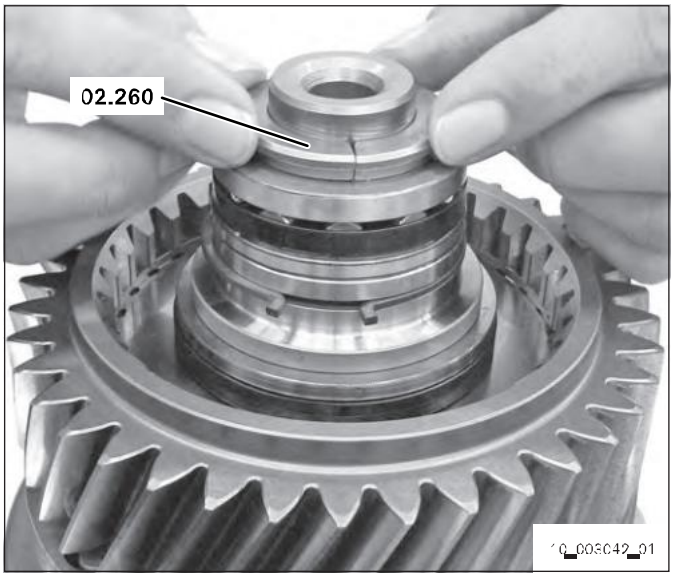

18 Pull securing ring **02.270** over split ring.

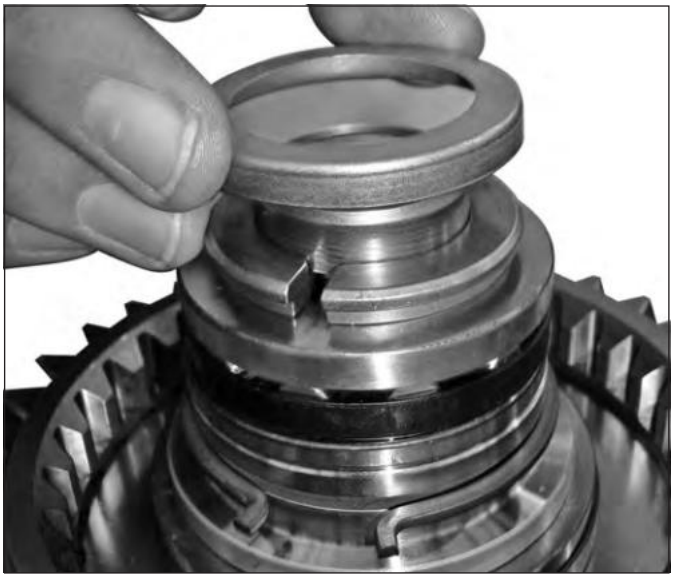

035960

19 Hold against securing ring with an auxiliary tool.

20 Secure securing ring by caulking 3x120°.

Insert the input shaft in the main shaft (*refer to Chapter Installing the Shaft Package).*

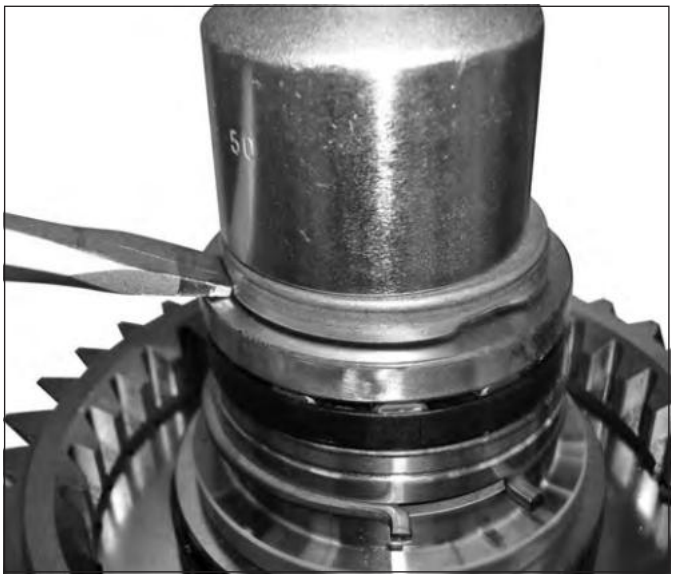

035961

Assembling the countershaft

For the 16-speed version, ensure that the correct tapered roller bearings on the output end are used. The tapered roller bearing dimensions are different at the output end **03.020, 03.040** (50x90x32) and at the input end **03.010, 03.030** (50x90x28).

Observe the following:

- Replace tapered roller bearings if the bearing rollers were damaged during the extraction process.

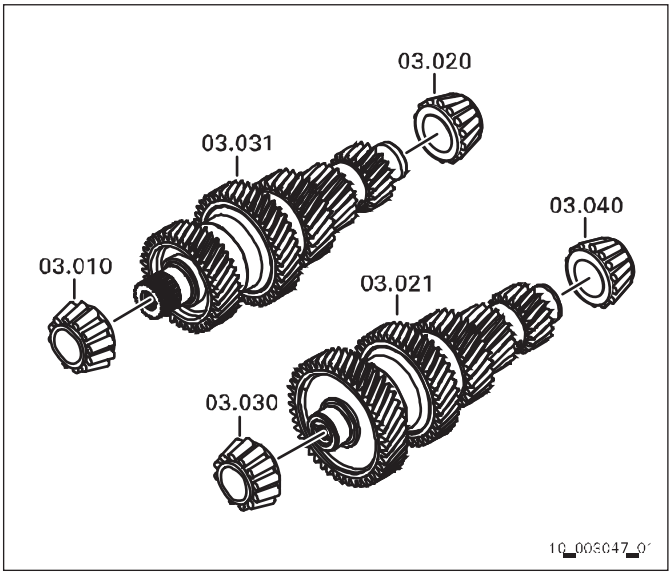

12-speed

⚠ CAUTION

Risk of burns due to contact with hot surfaces. Slight to moderate injury possible.

⇨ Wear protective gloves.

Heated parts can cause burns to parts of the body.

1 Heat up the tapered roller bearings **03.010, 03.020, 03.030, 03.040** inner rings to approx. 120°C and position axially on the countershaft without clearance.

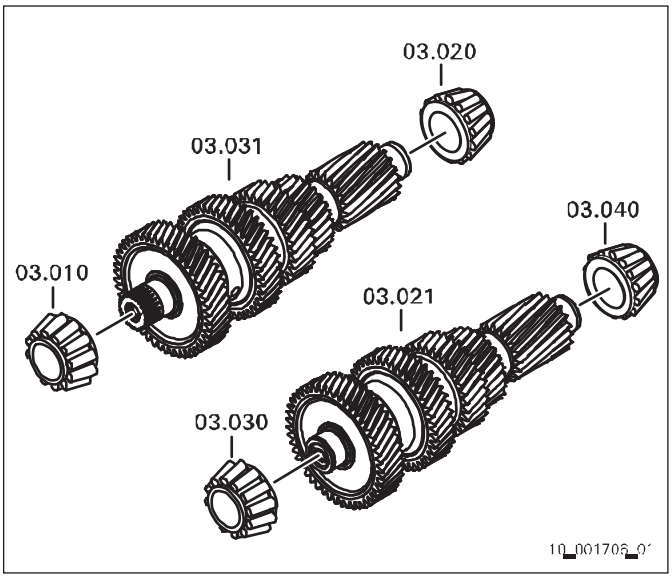

16-speed

2 Install the countershafts *(refer to Chapter Installing the Shaft Package)*.

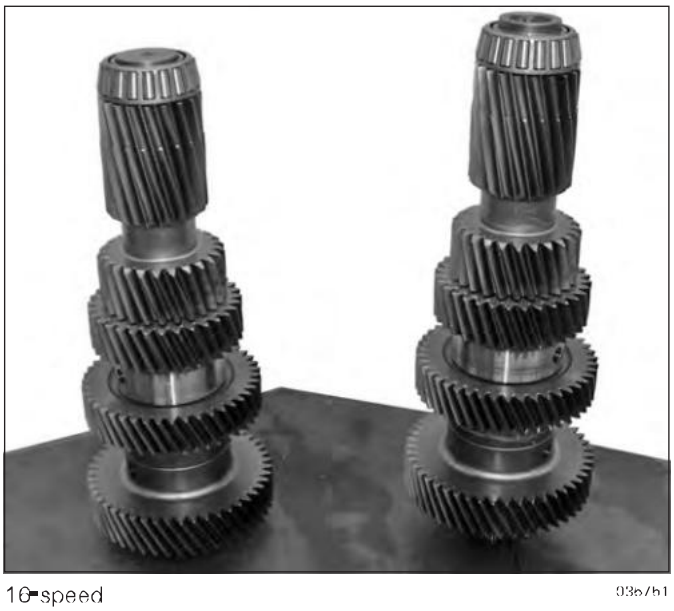

16-speed

Installing the shaft package

1 Clamp the main shaft in a vise with protective chucks.



0355 9

2 If required, place assembly fixture **1X56.138.730** on the input shaft.

3 Install the mounting fixture **1X56.138.216** on the input shaft.
Position the lugs of both half-shells **(13)** in the input shaft groove. On the other side, insert the threaded part **(12)** and put the tube **(14)** on top. Screw an M10 eyebolt **(11)** into the threaded part **(12)**.

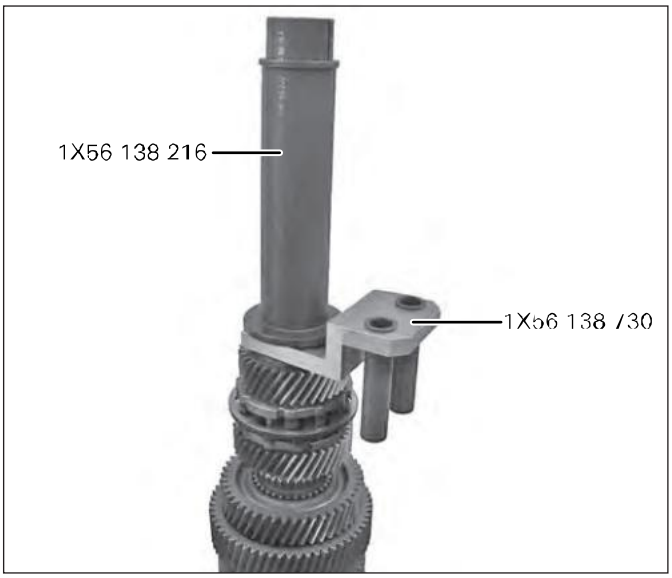

035 08_1

The mounting fixture **1X56.138.216** consists of two half-shells **(13)**, a tube **(14)**, a threaded part **(12)** and an M10 eyebolt **(11)**.

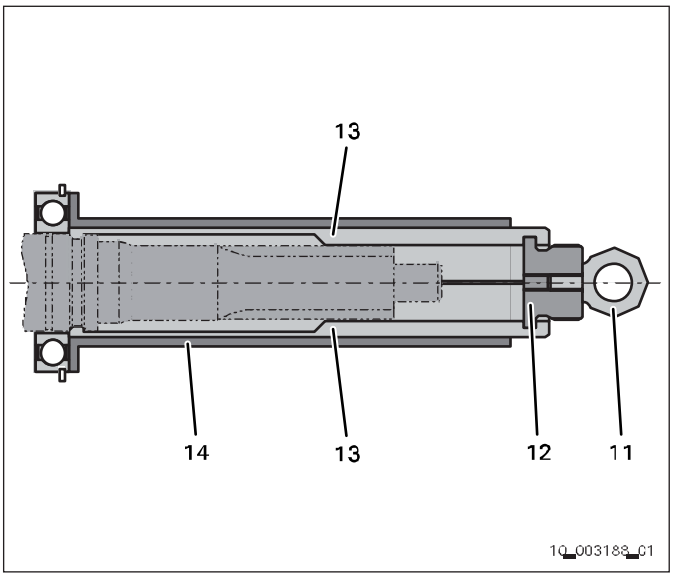

4 Check on assembly fixture **1X56.138.729** whether the spacer **(15)** for the R/C rail is installed.

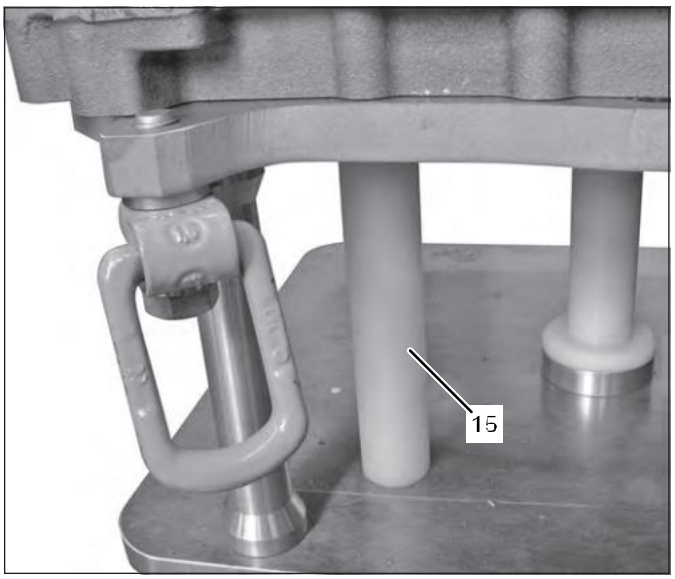

035 66_1

5 Connect the input shaft with the main shaft. Align the securing ring of the input shaft with the recess in the main shaft and the sliding sleeve.

6 Use pliers **1X56.138.728** to contract the securing ring and insert the input shaft into the main shaft. The securing ring snaps into the main shaft.

Observe the following:

- Make sure that the securing ring is fully engaged in the main shaft by slightly lifting the input shaft.

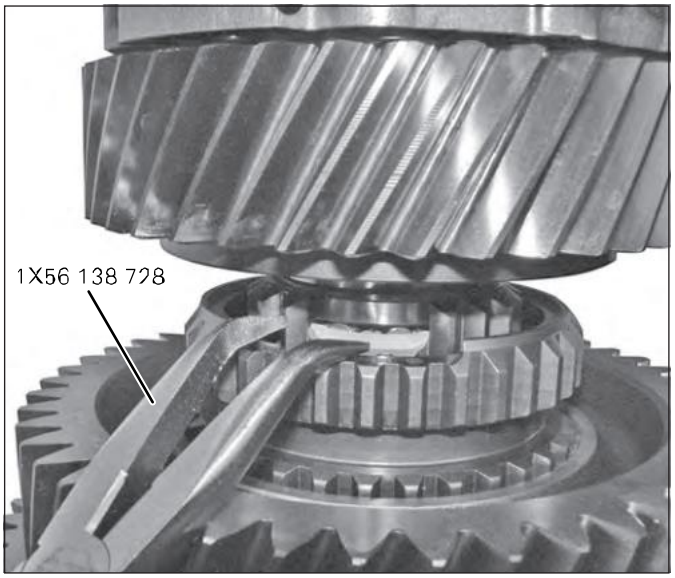

035 65_2

7 Push the sleeve **(16)** upwards and insert S/G shift fork **12.010**. The sliding pads of the shift fork must engage with the synchronizer unit's sliding sleeve.

8 12-speed version
Push the sleeve **(17)** upwards and insert the MT gearshift rail **06.010**. The two shift forks must engage with the two sliding sleeves R gear/1st gear and 2nd gear/3rd gear.

16-speed version
Push the sleeve **(17)** upwards and insert the MT gearshift rail **06.010**. The three shift forks must engage with the three sliding sleeves R gear, 1st gear/2nd gear and 3rd gear/4th gear.

9 Hook the chain sling **1T66.160.432** into the eyebolt.

10 Check whether the centering base **1X56.138.729/2** is attached to the assembly fixture.

11 Lightly grease the gearshift rails and their seat in the bearing support.

12 Use a hoist to carefully lift the shaft package into the bearing support.

13 Remove mounting fixture **(1) 1X56.138.216**.

14 Remove assembly fixture **(2) 1X56.138.730**.

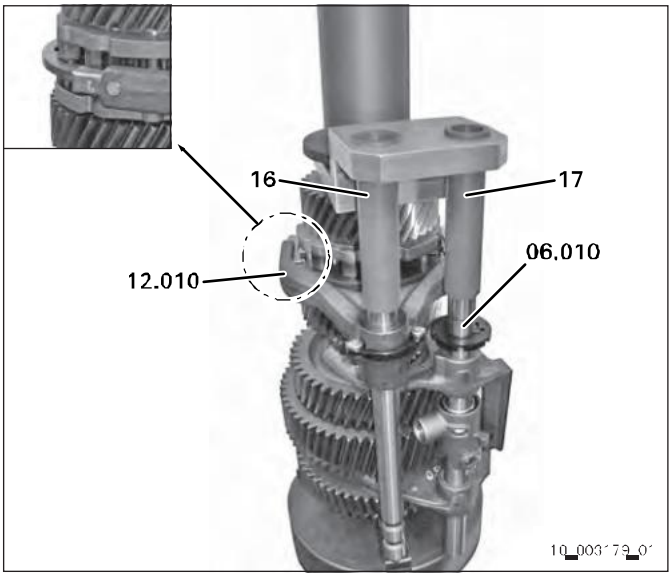

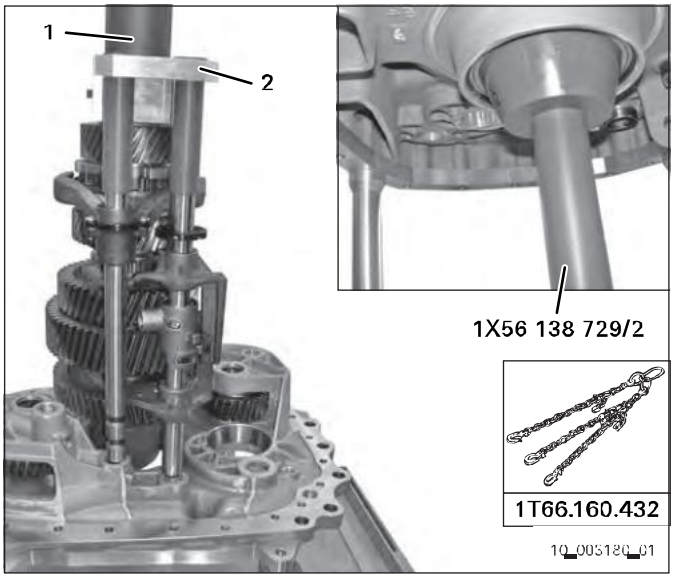

15 **Observe the following:**
- The recess of the R/C gearshift rail must not point towards the bolt (detent mechanism).

When inserting the R/C gearshift rail **34.010**, ensure correct installation position of the recess.

16 Turn the R/C gearshift rail **34.010** by 90° and snap into detent mechanism.

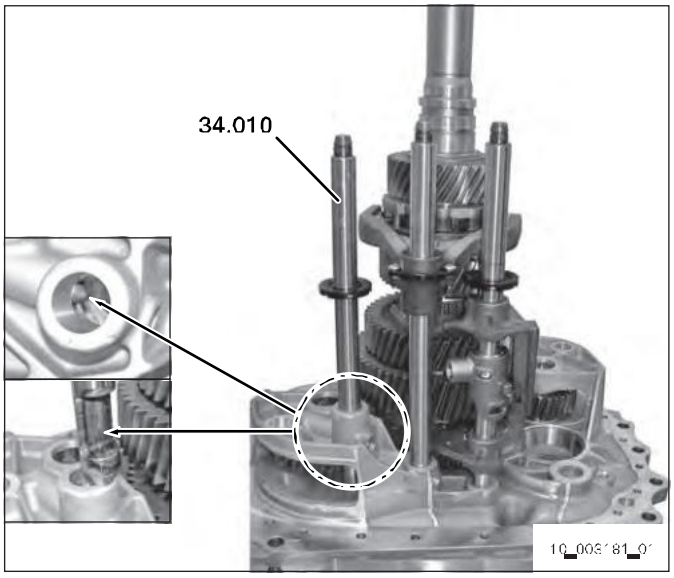

17 **Observe the following:**
- In installed condition, the markings on the countershaft gears must be opposite to each other (see arrows).

Screw M12 eyebolt into the countershafts **(1** and **2)**. Use a hoist to insert the countershafts one after the other into the bearing support. When inserting the countershafts, ensure the correct position of the marking.
Make sure that no gear is engaged to effortlessly obtain the correct position of the marking.

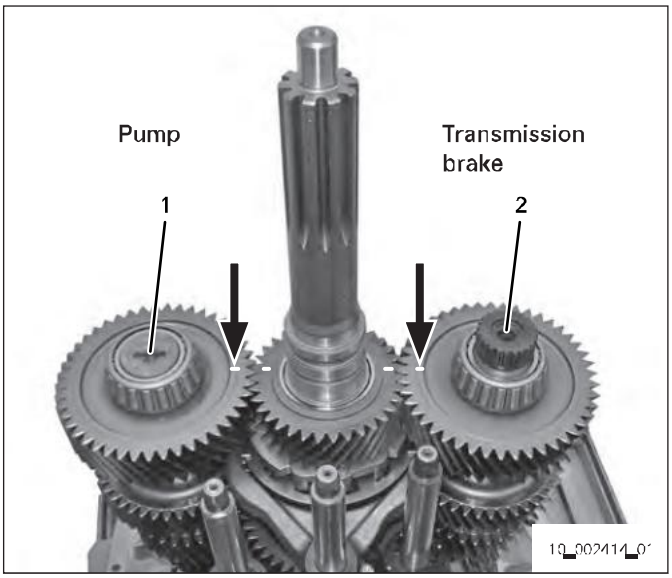

18 Insert needle ring (needle roller and cage assemblies) **(1) 05.020** and **05.040** into reverse helical gears **(2) 05.041** and **05.051**.

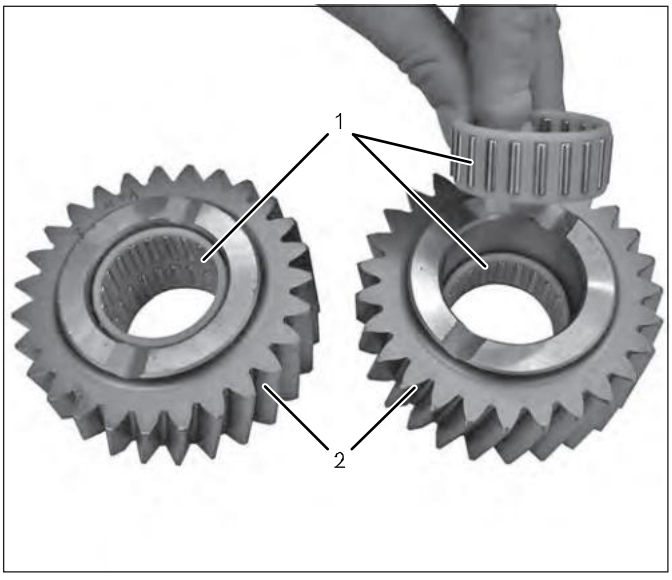

19 Insert both reverse helical gears **(1) 05.041** and **05.051** in the bearing support.

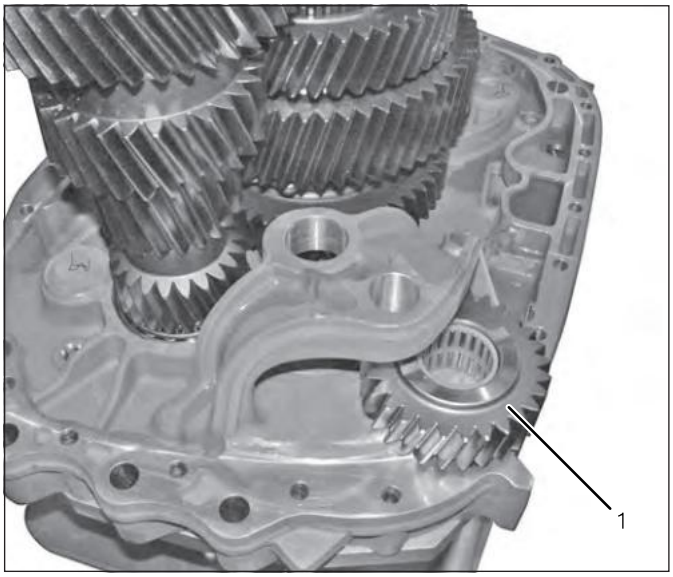

20 Lightly grease bores for the reverse idler gear bolts.

21 Insert a retaining bolt **1X56.138.732** each into the two R gear reversing gears for fixing.

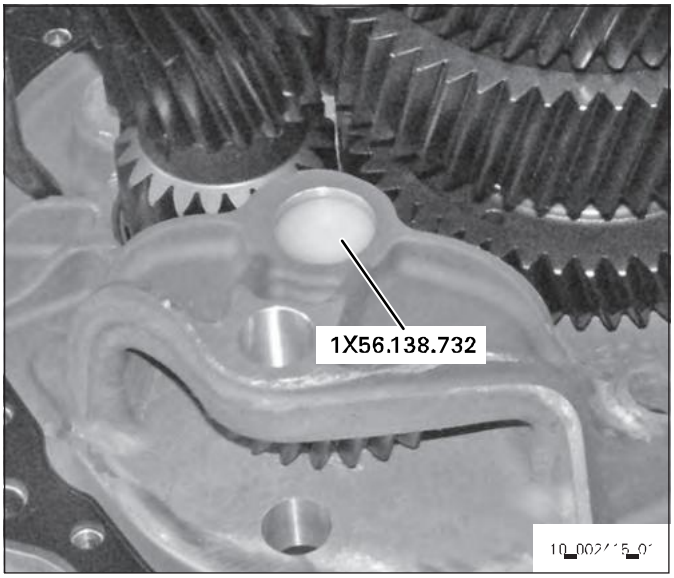

22 Insert the two injector tubes **10.010** and **10.020**.

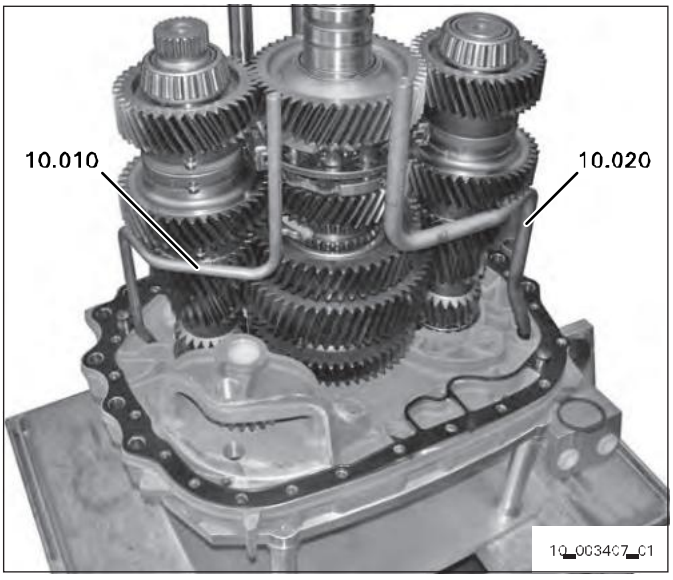

Assembling the clutch housing

1 Heat up the clutch housing to about 100°C in the area of the two bearing outer rings **03.010, 03.030**.

2 Place the antirotation device of the bearing outer rings into the clutch housing's recess.

3 Carefully press in bearing outer rings of tapered roller bearings **03.010, 03.030** using the press-in device **1X56.138.738**.

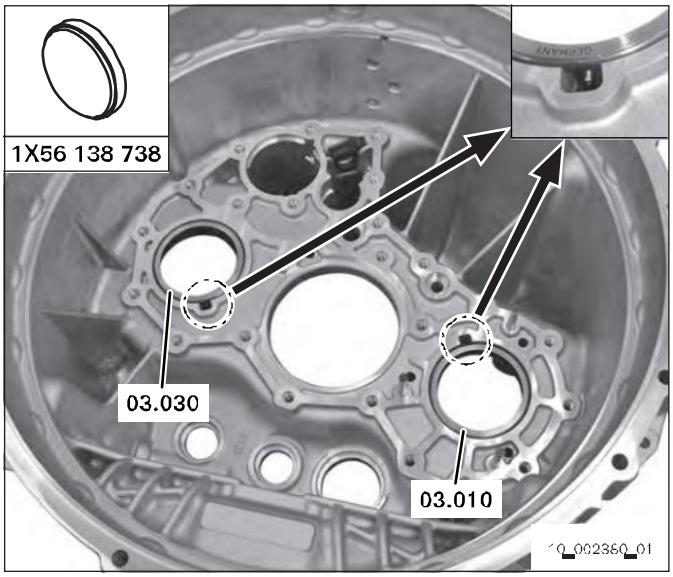

4 Insert three cylindrical pins **(1) 07.060, 07.070, 07.080** into the clutch housing using a press-in mandrel **1X56.138.743**.

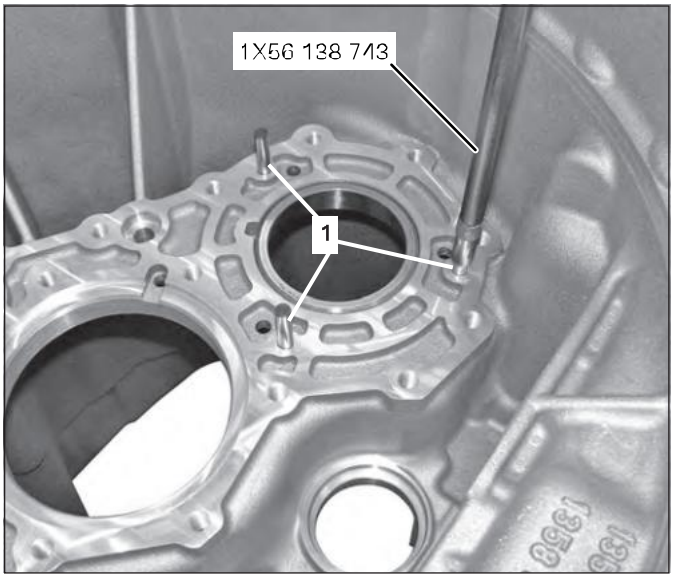

Installing the clutch housing

1 Clean the sealing faces.
The sealing faces on the clutch housing must be clean and free from oil and grease.

2 Ensure that the seal **31.810** does not slip.

3 Place dowel pins **1X56.138.733**, **1X56.138.734** on the injector tubes to center the clutch housing.

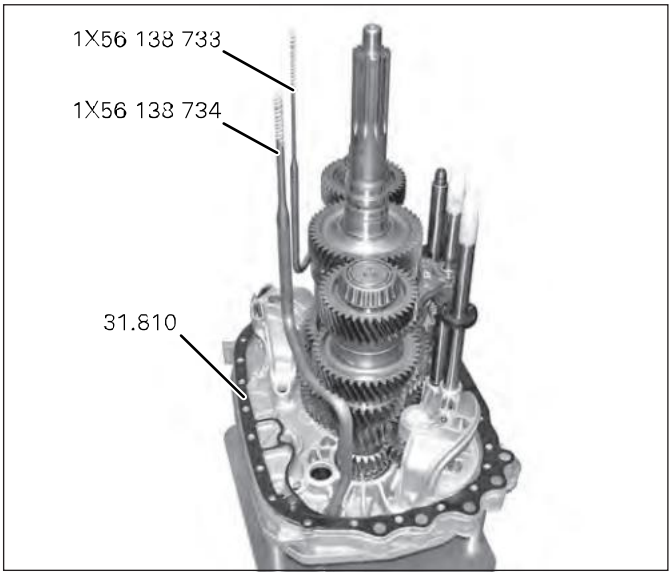

03a 39_1

4 Align shift system.



03570

5 Attach two screw-on adapters **1T66.159.741** or two eyelet bolts to the clutch housing, avoiding damage to the housing centering device.

6 Hook in chain sling **1T66.160.432**.

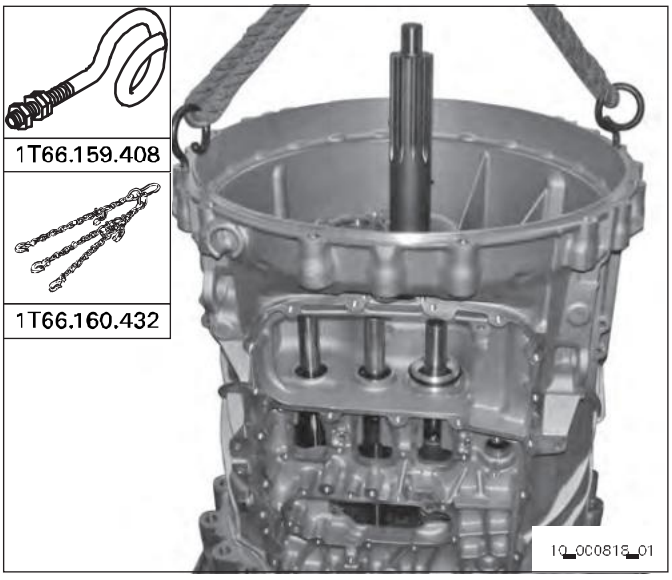

7 Carefully place the clutch housing **01.301** on the bearing support **01.071**.

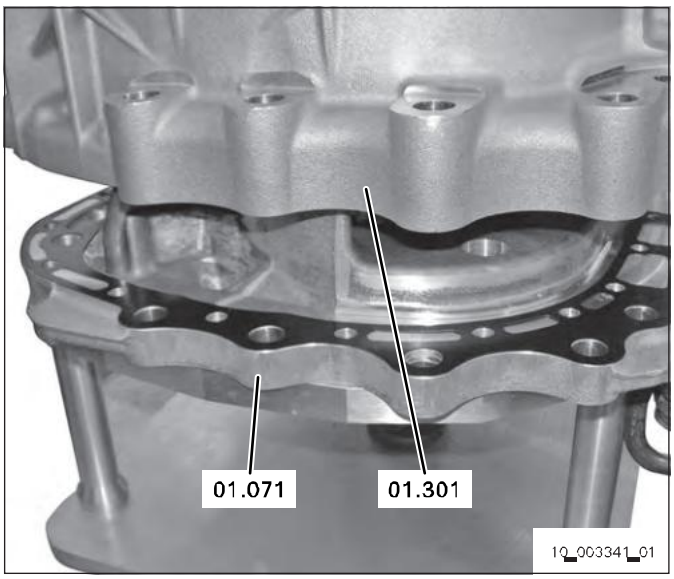

8 Check whether the injector tubes are correctly positioned in the clutch housing.

9 Remove dowel pins **1X56.138.733**, **1X56.138.734**.

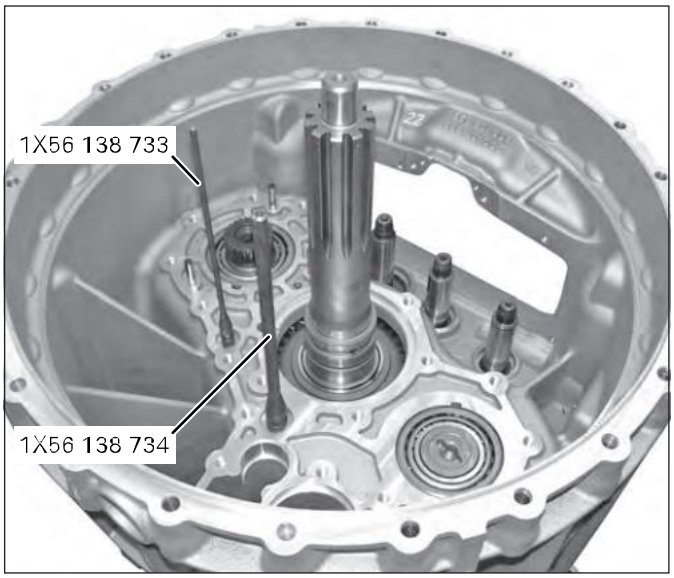

10 Attach bearing support and assembly fixture **1X56.138.729** to clutch housing using 25 hexagon screws **(2)**.
Tightening torque: **50 Nm**

Observe the following:
- Tighten all 25 hexagon screws **(2)** to **50 Nm**, otherwise the measurement results when measuring the bearings might be incorrect.

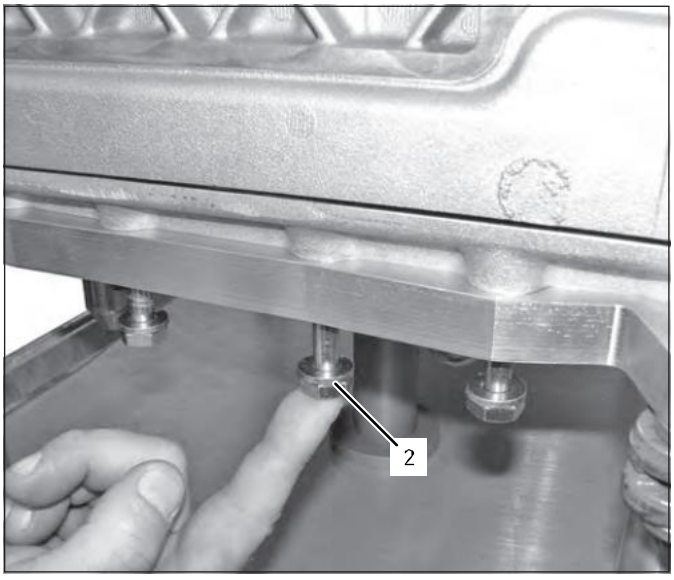

11 Align gearshift bush **(3)** to clutch housing.

12 Push cylindrical pin **06.060** through the bore until firmly home.

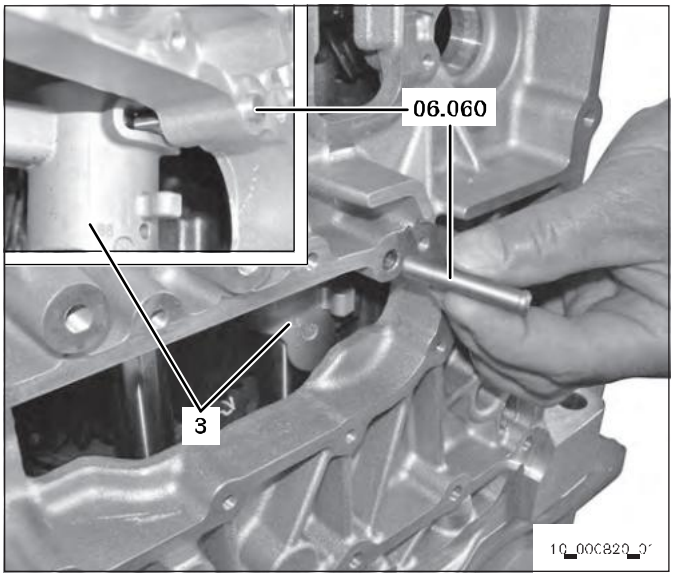

13 When using the assembly fixture **1X56.197.922**, secure clutch housing with four clamping shoes **(1)**.
Tightening torque: **20 Nm**

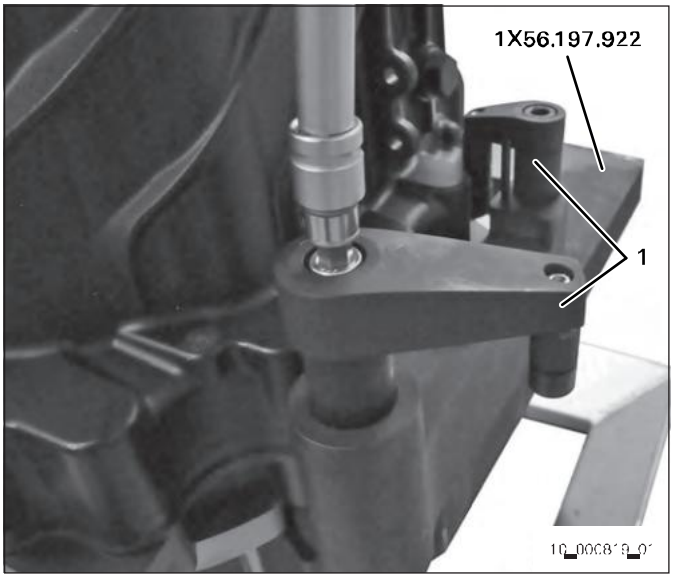

14 Insert snap ring **(1)** into the groove of the ball bearing **02.030**.

15

⚠ CAUTION

Risk of burns due to contact with hot surfaces.
Slight to moderate injury possible.
⇨ Wear protective gloves.

Heat up the inner ring of the ball bearing with a heating mandrel to approx. 80 to 90°C.

16 Use protective gloves to insert ball bearing **02.030** into clutch housing. The ball bearing's snap ring must by firmly home at the clutch housing.

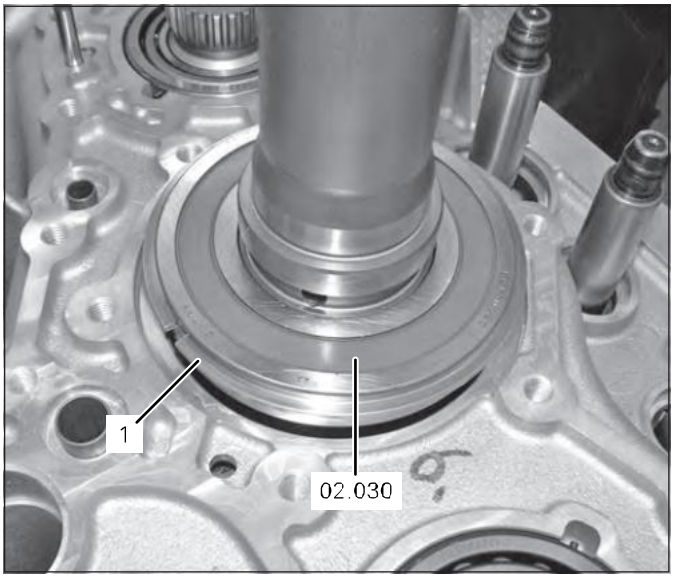

17 Drive on ball bearing **02.030**, if required, by using the outer tube **(10)** of the mounting fixture **1X56.138.216**.

The mounting fixture **1X56.138.216** consists of two half-shells, a tube and a threaded part. Fit mounting fixture **1X56.138.216** as follows. On one side, place the lugs of the two half-shells into the groove of the input shaft. At the other side, insert the threaded part and put tube on top.

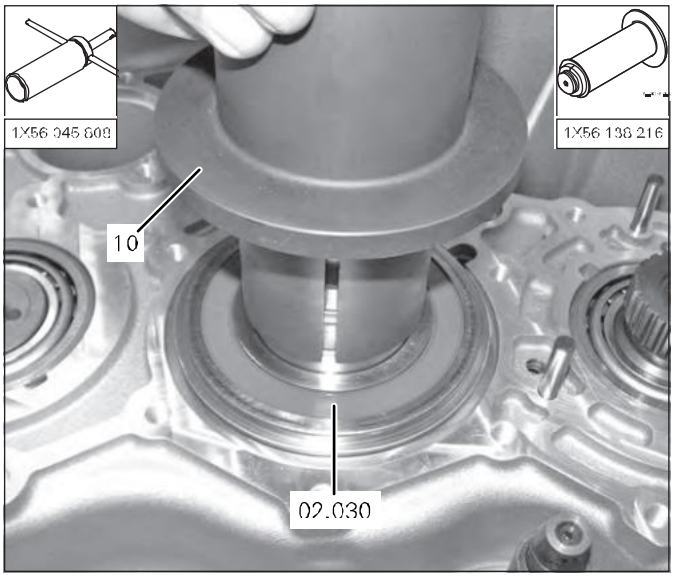

18 Use the mounting fixture **1X56.045.808** in conjunction with the fixture **1X56.138.216** to pull the input shaft into the ball bearing until firmly home.

Installation note
If the ball bearing's snap ring is not firmly home at the clutch housing, do the following.
Glue a shim into an old connection plate using grease. Evenly tighten the connection plate without seal on the input shaft using six screws.
Tightening torque: ***20 Nm***
Afterwards remove connection plate and shim.

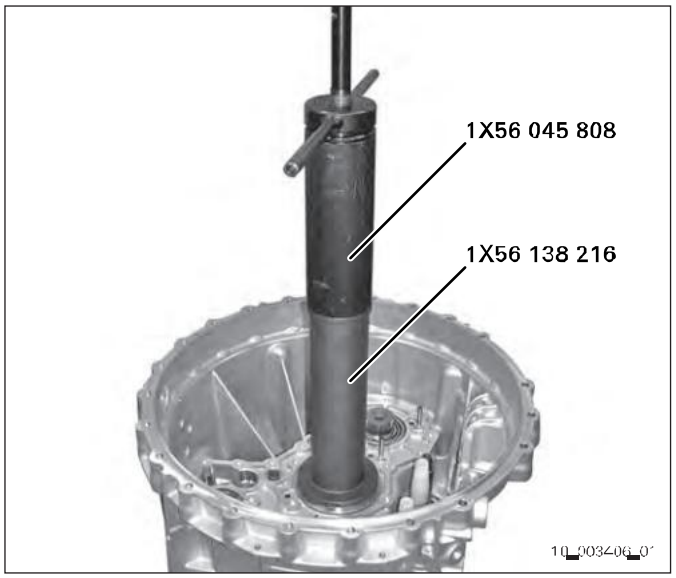

19 Remove the fixtures and use a feeler gage to measure the thickness of the securing ring. Consider a clearance of **0 up to 0.10 mm** for the selection of the securing ring.

20 Insert securing ring **02.050**.
The securing ring must rest firmly on the input shaft's groove base.

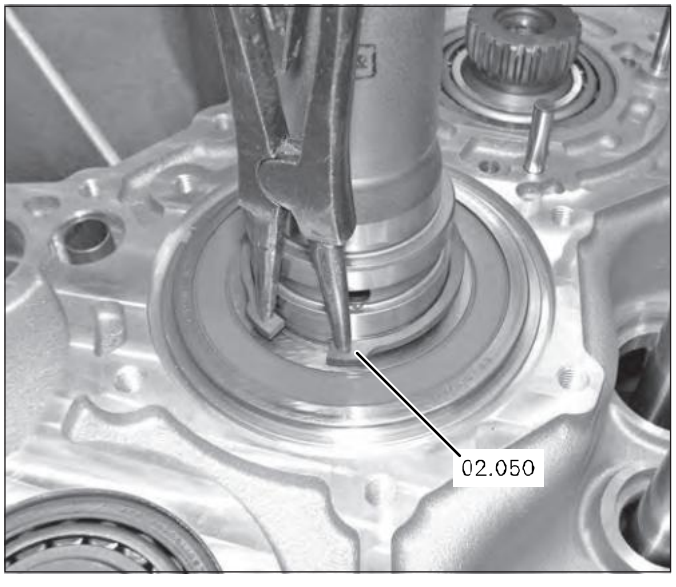

Pre-assembling the connection plate

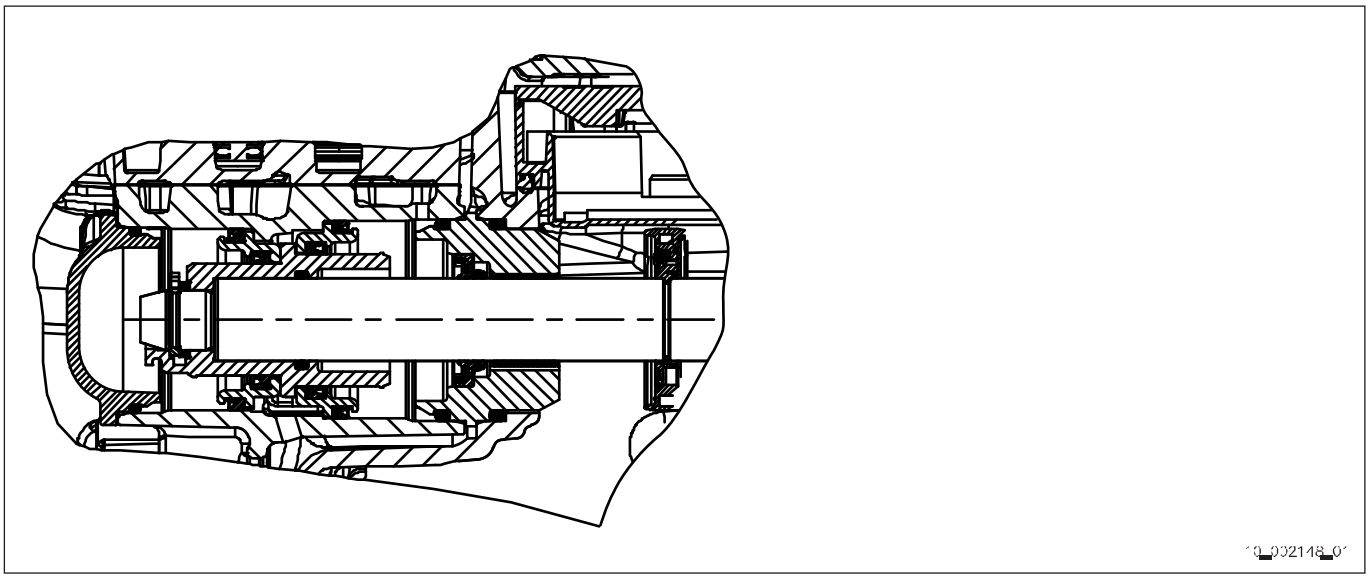

Overview gear shift piston main transmission (MT)

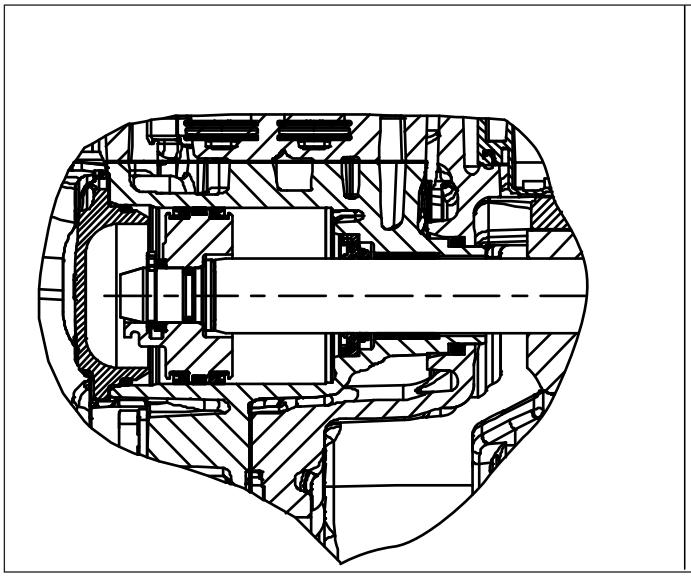

Overview gear shift piston splitter group (S/G)

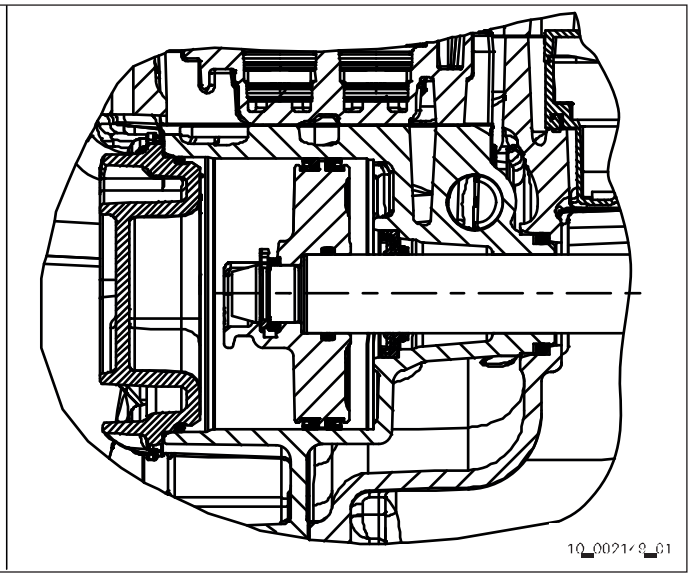

Overview gear shift piston range change group (R/C)

Observe the following:

- If a reference is made to the installation instructions 0000.702.644 (refer to Annex), the lubricating grease RENOLIT CX-TOM 15-OEM shall be used. The specifications of the installation instructions 0000.702.644 shall be complied with. Deviating lubrication might damage the transmission.

1 Clean sealing faces **(1)** of the connection plate **02.010**.

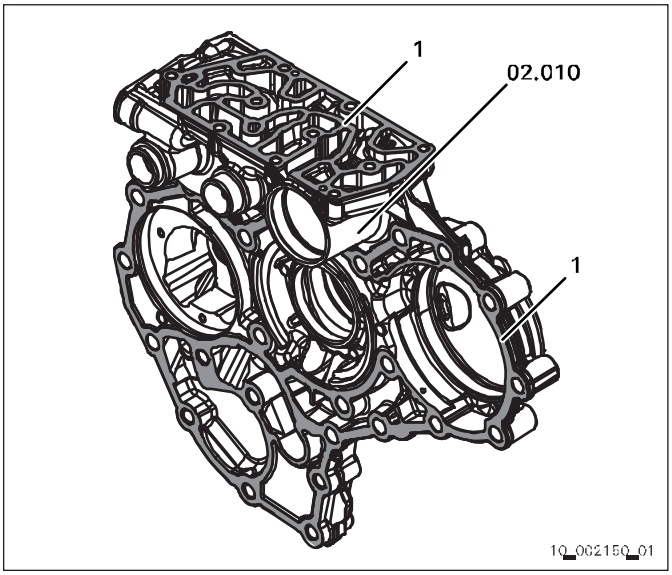

2 Clean sealing face **(1)** at clutch housing. The M10 tapped holes must be clean and free from oil and grease.

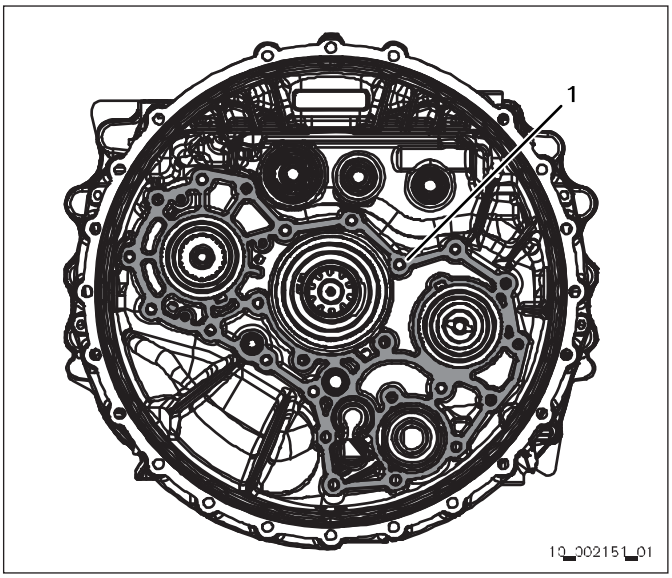

Installing the pump

08.010	Rotor
08.020	Pump shaft
08.030	Pump cover
08.050	Torx screw **(1)**
08.060	Torx screw **(1)**
08.070	Torx screw **(1)**

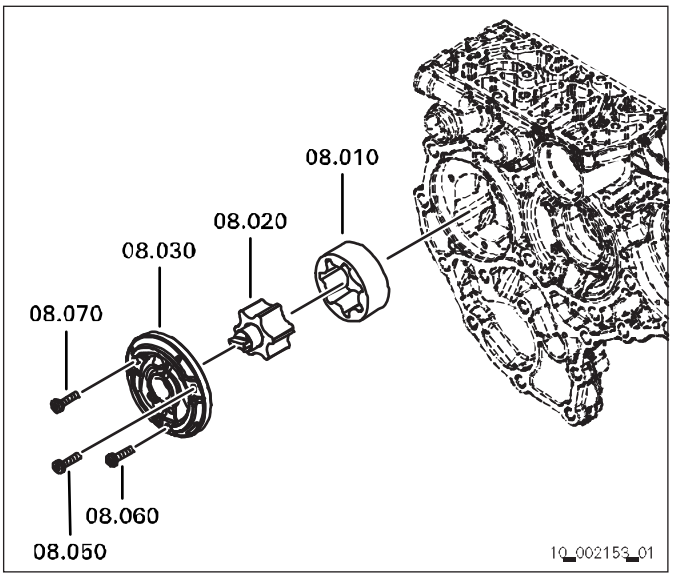

3 Oil rotor **08.010** and pump shaft **08.020** with anticorrosion oil and insert them into the connection plate. Ensure that the point markings on rotor **08.010** and pump shaft **08.020** are in line.

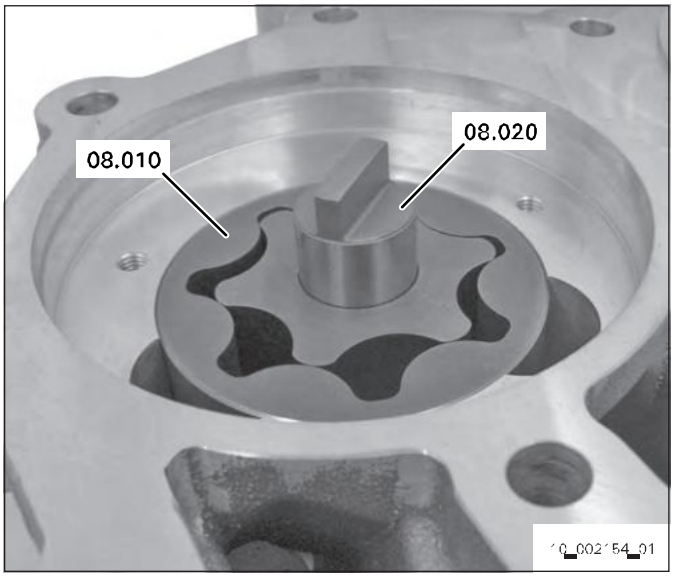

4 Insert pump cover **08.030** so that the arrows at the pump cover and the connection plate are in line.

5 Attach pump cover **08.030** with three M6 torx screws **(1)**.
Tightening torque: **10 Nm**

After the assembly, the pump shaft **08.030** must rotate effortlessly.

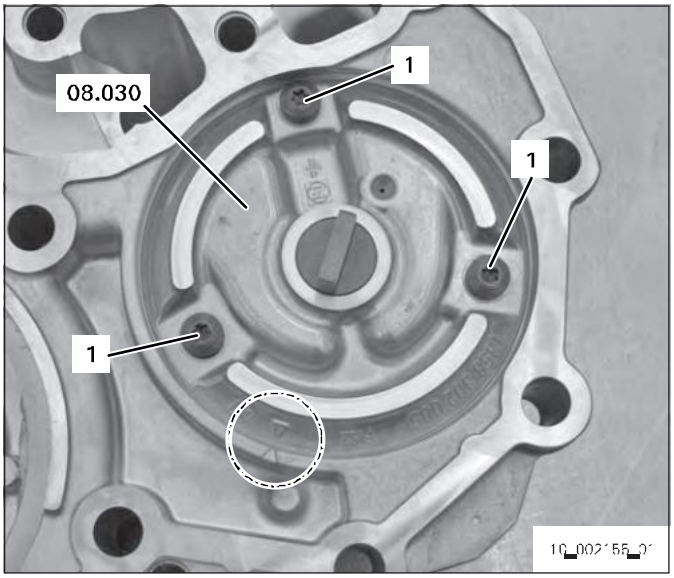

6 Grease bearing seat of transmission brake. Evenly apply lubricating grease according to installation instructions 0000./02.644.
Grease quantity: 1.2 grams
Installation instructions and comparison table for grease quantities, refer to Annex.

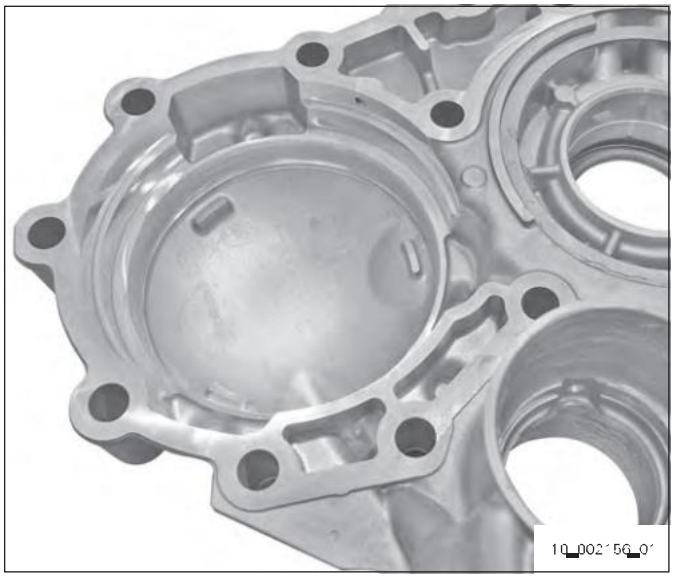

7 Insert grooved ring **07.020** into the piston **07.010**. Ensure the correct installation position of the grooved ring **07.020**.

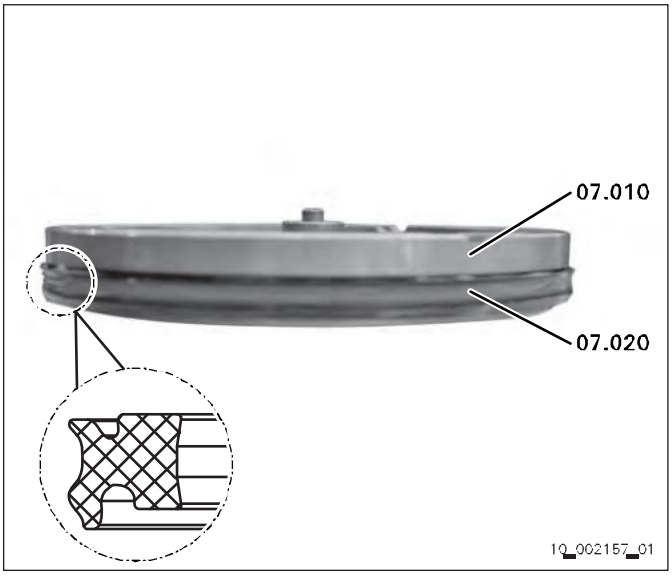

8 Grease grooved ring **07.020**. Evenly apply lubricating grease according to installation instructions 0000.702.644.
Grease quantity: 0.8 grams
Installation instructions and comparison table for grease quantities, refer to Annex.

9 Insert piston **07.010** into connection plate using the insertion aid **1X56.138.737**.

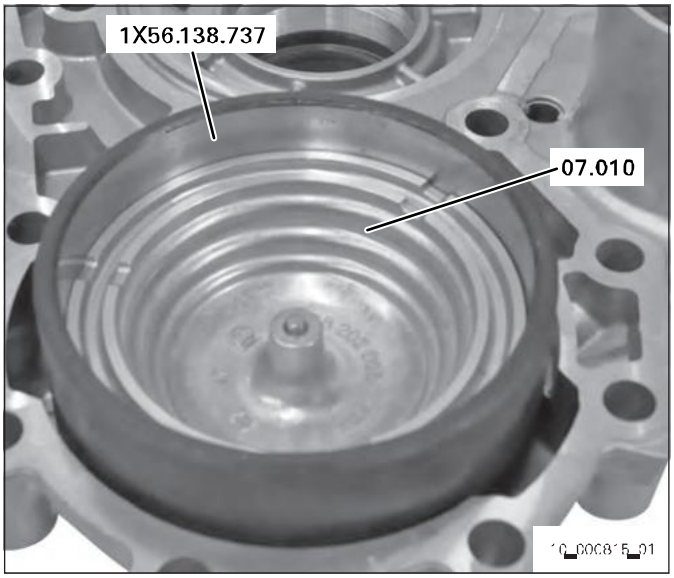

10 Fit three supports **1X56.138.735** to the connection plate.

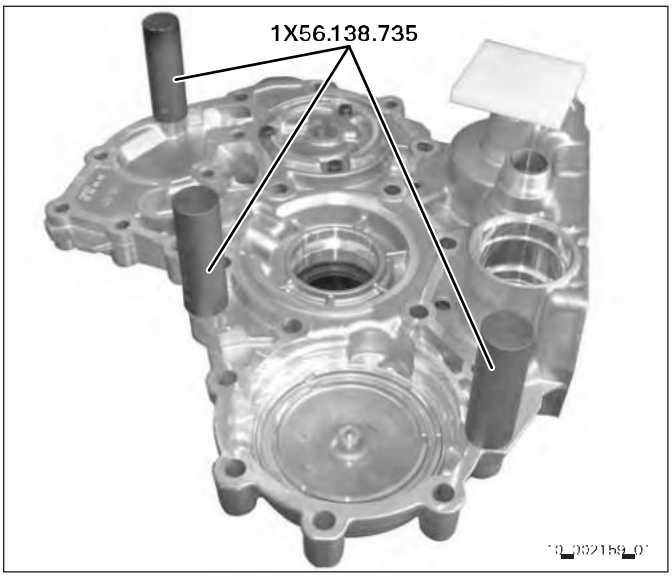

11 Put connection plate on three supports, support with plate **(3)**.

12 **Observe the following:**
- Do not coat the outer circumference of the shaft sealing ring **02.020** with lubricant.
- Sealing lip must face the output.

Press in shaft sealing ring **02.020** until firmly home in the connection plate using the press-in device **1X56.138.738**.
Lightly grease sealing lip with grease of class A according to ZFN 13000.

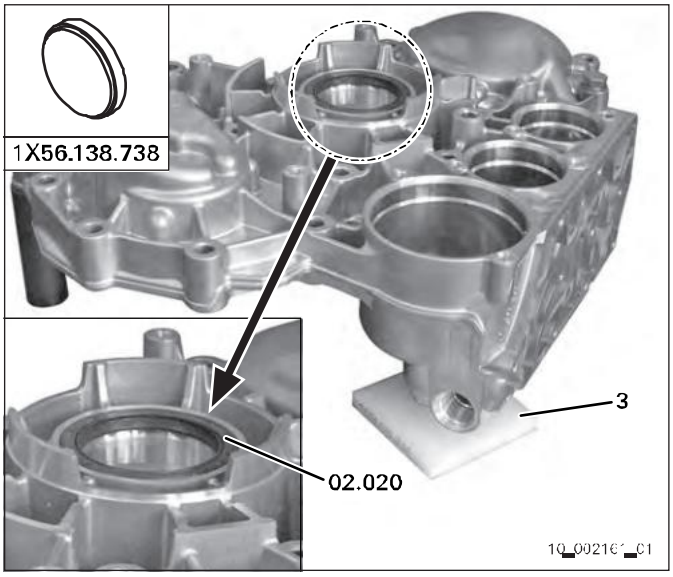

13 **Observe the following:**
- Donotcoat the outer circumference of the plain bearing **12.090** with lubricant.

Use adapter **1X56.138.736** to insert the plain bearing **12.090** in the connection plate.

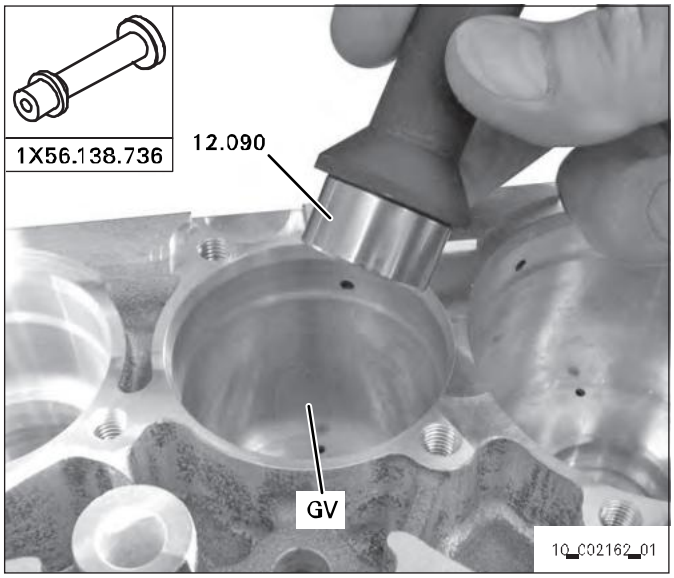

14 **Observe the following:**
- Do not coat the outer circumference of the cap-shaped seals**12.100, 34.080** with lubricant.

Use adapter **1X56.138.744** to insert cap-shaped seals **12.100, 34.080** in dry condition in the connection plate.

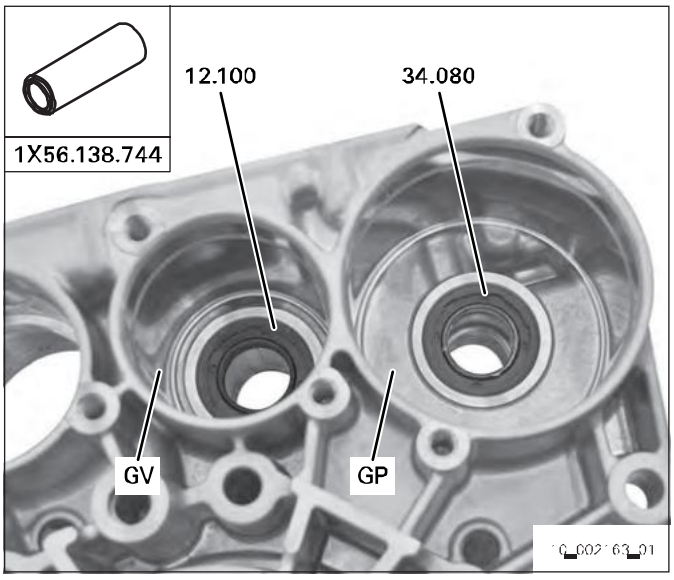

15 Grease the sealing lips of the two cap-shaped seals **12.100, 34.080**. Evenly apply lubricating grease according to installation instructions 0000.702.644.
Grease quantity: 0.4 grams
Installation instructions and comparison table for grease quantities, refer to Annex.



Example: Grease quantity 0.4 grams

16 Grease R/C, S/G and MT cylinder contact surfaces as described below.

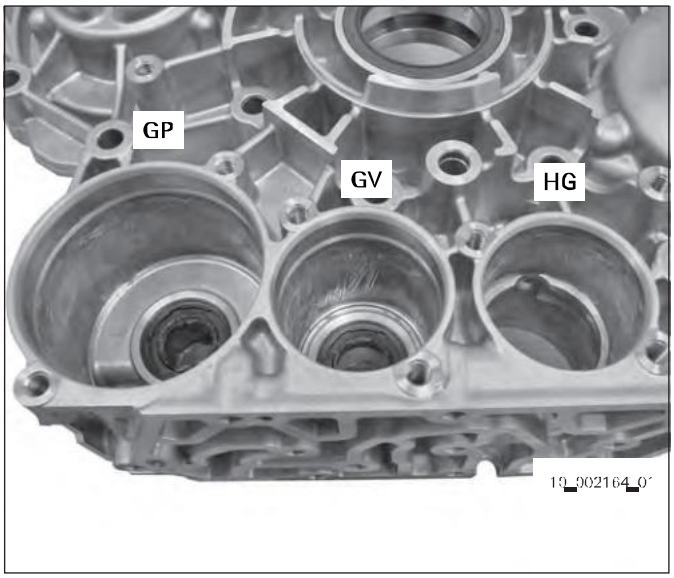

17 Grease R/C cylinder contact surface. Evenly apply lubricating grease according to installation instructions 0000.702.644.
Vent bores and air ducts must be kept free from lubricating grease.
Grease quantity:
R/C cylinder contact surface 1.8 grams

Installation instructions and comparison table for grease quantities, refer to Annex.

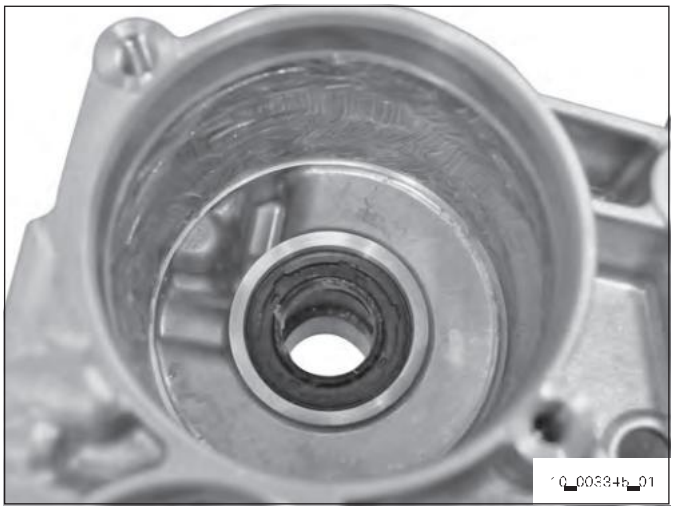

Example: Grease quantity 1.8 grams

18 Grease S/G cylinder contact surface.
Evenly apply lubricating grease according to installation instructions 0000.702.644.
Vent bores and air ducts must be kept free from lubricating grease.
Grease quantity:
S/G cylinder contact surface 1.4 grams

Installation instructions and comparison table for grease quantities, refer to Annex.

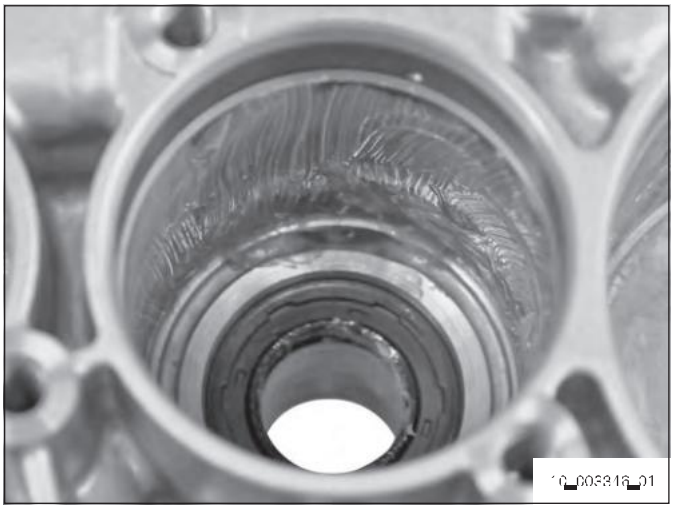

Example: Grease quantity 1.4 grams

19 Grease MT cylinder contact surface. Evenly apply lubricating grease according to installation instructions 0000.702.644.
Vent bores and air ducts must be kept free from lubricating grease.
Grease quantity:
MT cylinder contact surface 3.3 grams

Installation instructions and comparison table for grease quantities, refer to Annex.

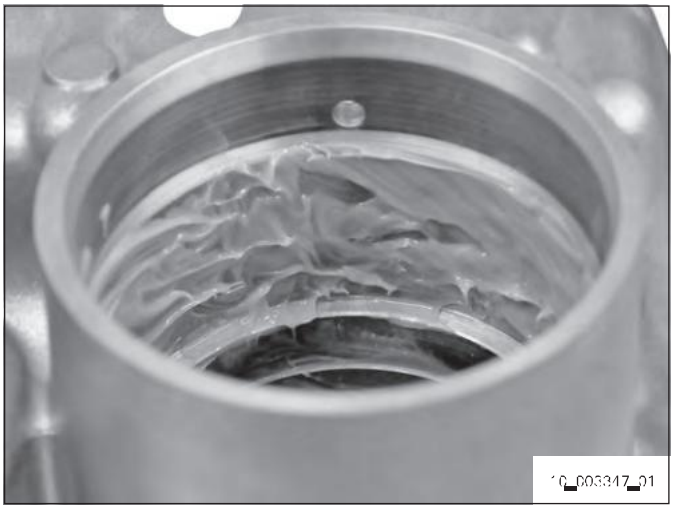

Example: Grease quantity MT cylinder



Example: Grease quantity MT cylinder

20 Push on new O-rings **02.1200, 02.1210** and lightly apply grease of class A according to ZFN 13000.

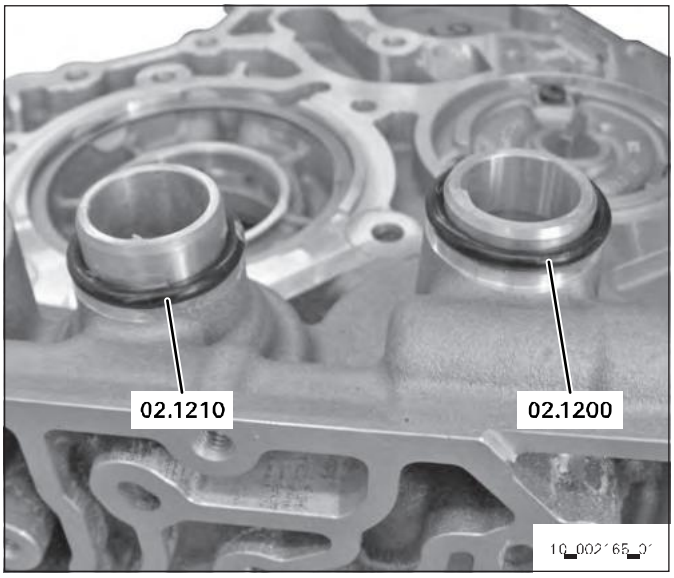

21 Insert filter element **10.040** and screen insert **10.050** into clutch housing.

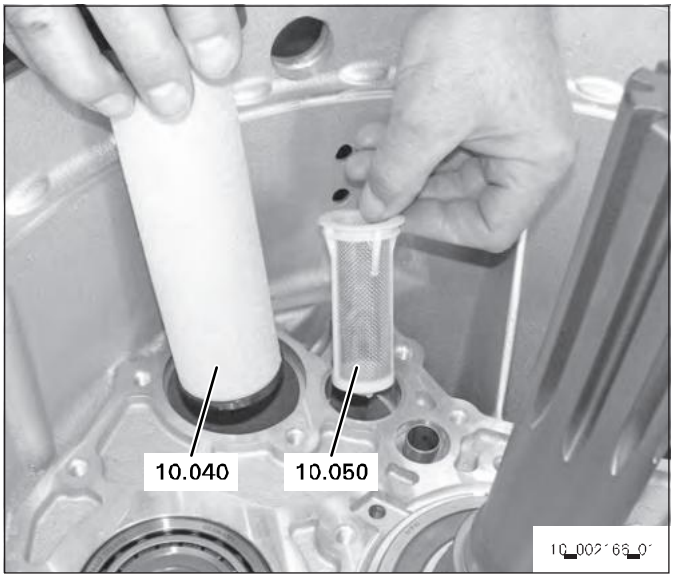

22 Insert solenoid **10.060**.

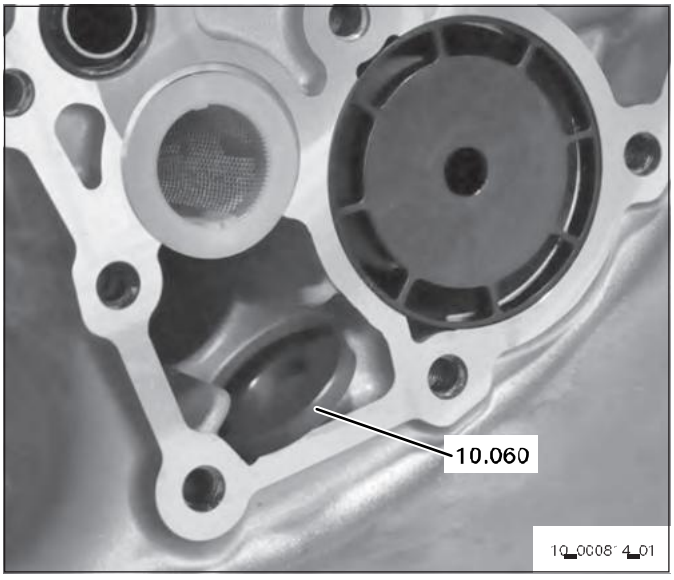

23 **Observe the following:**

- Ensure correction installation position **(A)** when inserting the seals **10.012, 10.024**. The seals could be installed incorrectly.

Seal the two injector tubes with new seals **10.012, 10.024**.

24 Insert compression spring **07.030** and detent bolt **07.040** into countershaft.

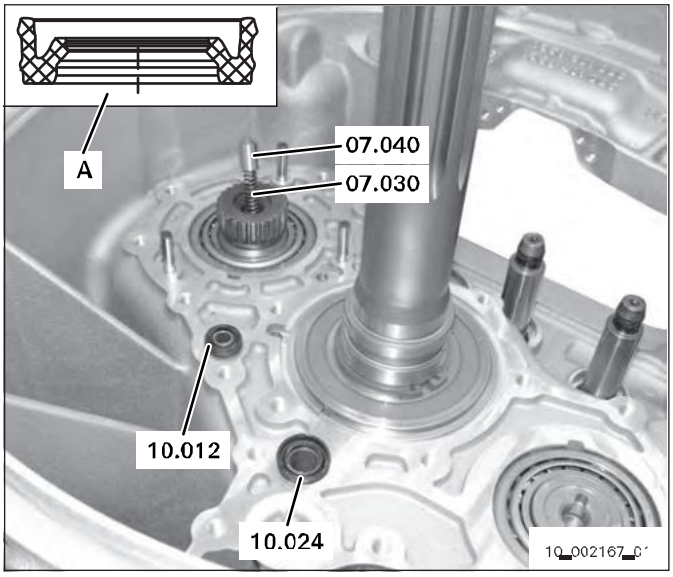

Measuring the connection plate

Transmission must be in horizontal position when measuring.

1 Engage S/G, if required, by using bolt **AA01.388.803** and pry bar.

2 Turn input shaft several times back and forth. This helps align the bearings' tapered rollers and makes them roll into the bearing outer rings.
To set the specified preload of **0.05 mm up to 0.15 mm** on the two countershafts, "zero clearance" has to be achieved first.

3 Fit both bearing outer rings of the countershafts with zero clearance to the tapered roller bearings using the sleeve **AA01.388.808**.

4 Use a sharp object to check whether the bearing's tapered rollers can be moved.
Zero clearance is attained when the tapered rollers are fixed securely but have no preload.

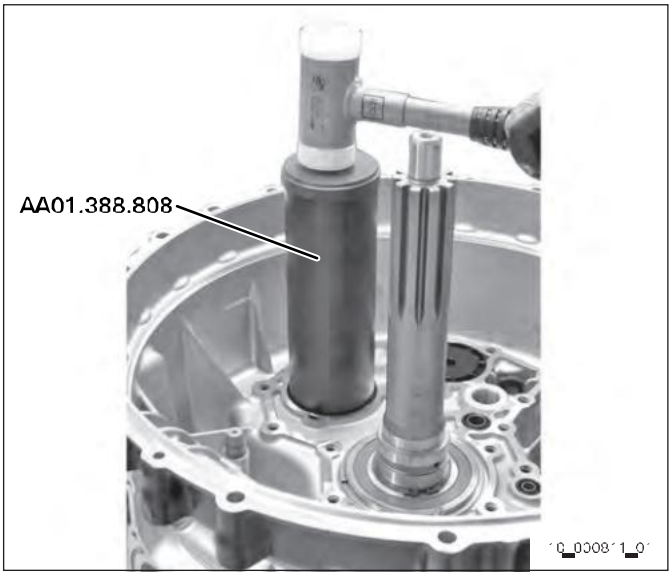

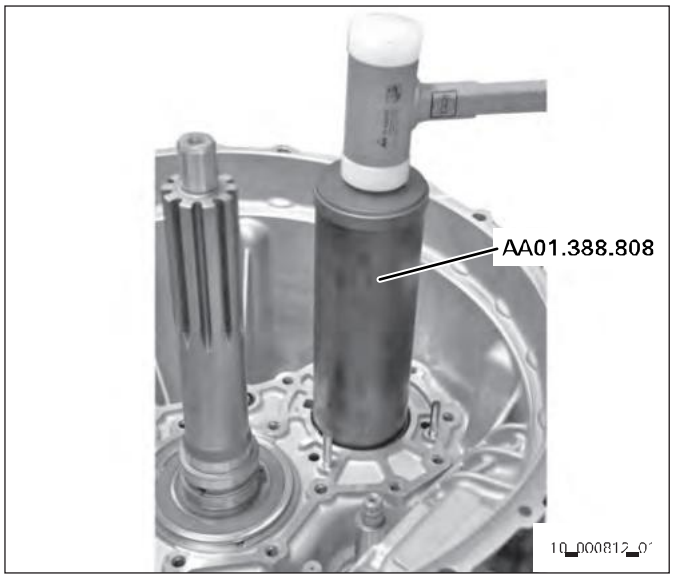

Countershaft (transmission brake)
Measure and calculate the shim **03.012**:

Dimension a_1
Measure from the sealing face of the clutch housing to the tapered roller bearing's outer ring, e. g., 1.65 mm.

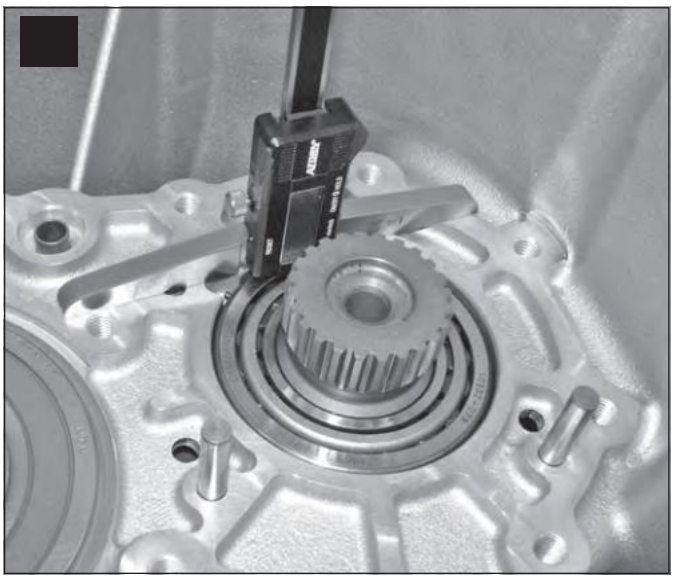

Dimension a1 036/25

Dimension a_2
For measurements, insert brake cover in the connection plate.
Measure from the brake cover to the sealing face of the connection plate, e. g., 0.12 mm.

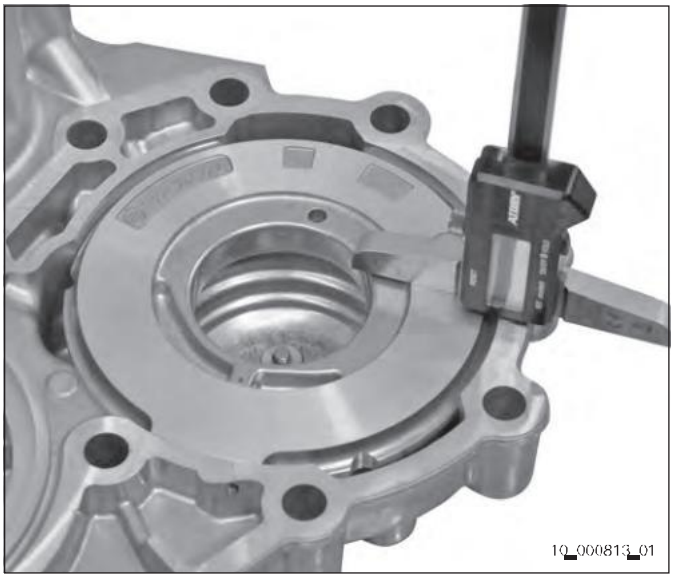

Dimension a2

Calculate thickness **a** of the shim (transmission brake).
Exemplary calculation:
$a_1 - a_2$ + preload + seal = a
1.65 − 0.12 + 0.10 mm + 0.35 mm = 1.98 mm

5 Place the shim **03.012** with the calculated thickness **a** on the tapered roller bearing's outer ring.

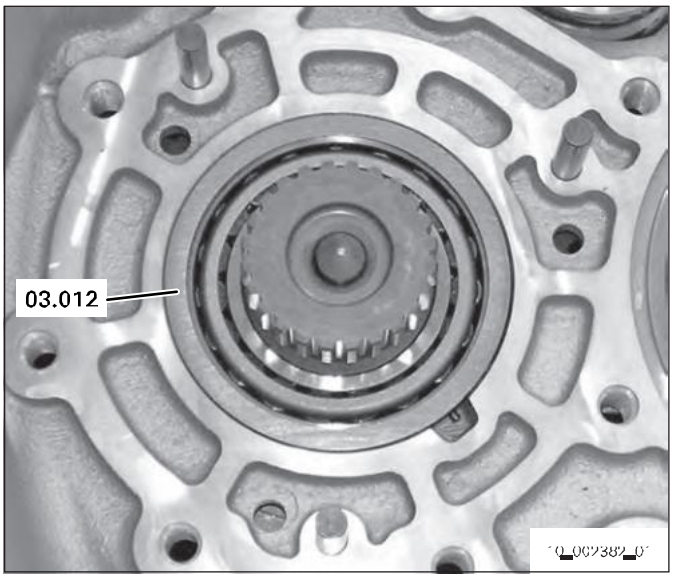

Countershaft (pump)
Measure and calculate the shim **03.032**:

Dimension b_1
Measure from the sealing face of the clutch housing to the tapered roller bearing's outer ring, e.g., 2.10 mm.

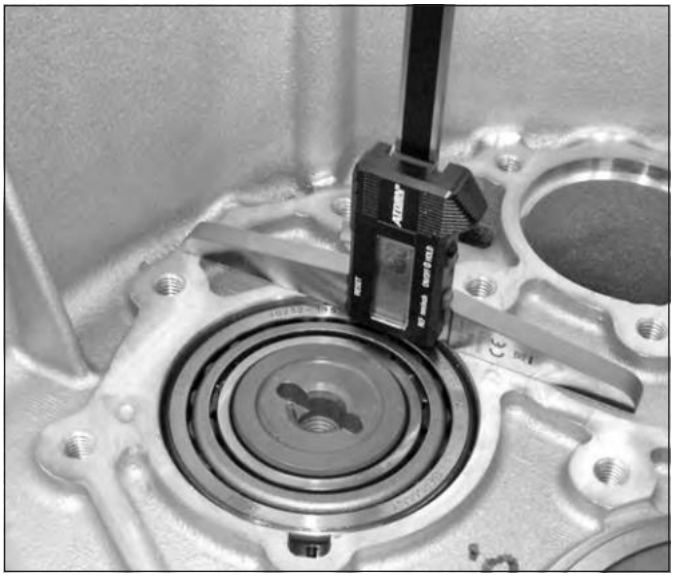

Dimension b_1 036728

Dimension b_2
Measure from the pump cover to the sealing face of the connection plate, e. g., 0.15 mm.

Calculate thickness **b** of the shim (pump).

Exemplary calculation:
$b_1 - b_2$ + preload + seal = b
2.10 − 0.15 + 0.10 mm + 0.35 mm = 2.40 mm



Dimension b_2 035729

6 Place the shim **03.032** with the calculated thickness **b** on the outer ring of the tapered roller bearing.

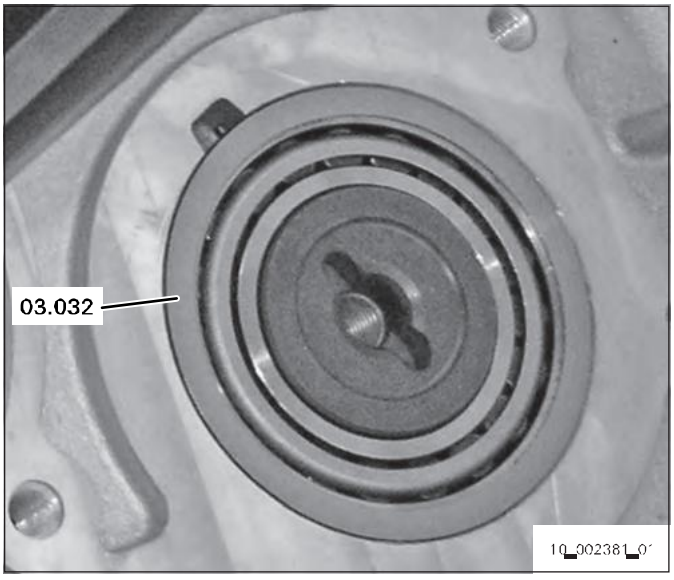

Input shaft
Measure and calculate the washer **02.040**:

Dimension c_1
Measure from the sealing face of the connection plate to the contact surface of the washer **02.040**, e.g., 3.59 mm.



Dimension c_1 035731

Dimension c_2
Measure from the bearing outer ring to the sealing face of the connection plate, e.g., 1.89 mm.



Dimension c_2 035732

Calculate thickness **c** of the washer (input shaft).

Exemplary calculation:
$c_1 - c_2 + \text{seal} = c$
3.59 − 1.89 + 0.35 mm = 2.05 mm

Subtract the **axial clearance between 0 and 0.10 mm** from the calculated washer thickness of 2.05 mm.

7 Select washer **02.040** with calculated thickness **c** from the spare parts catalog.

8 Slightly grease the washer **02.040** (for improved assembly) and place into connection plate.

Connection plate
Overview gear shift pistons

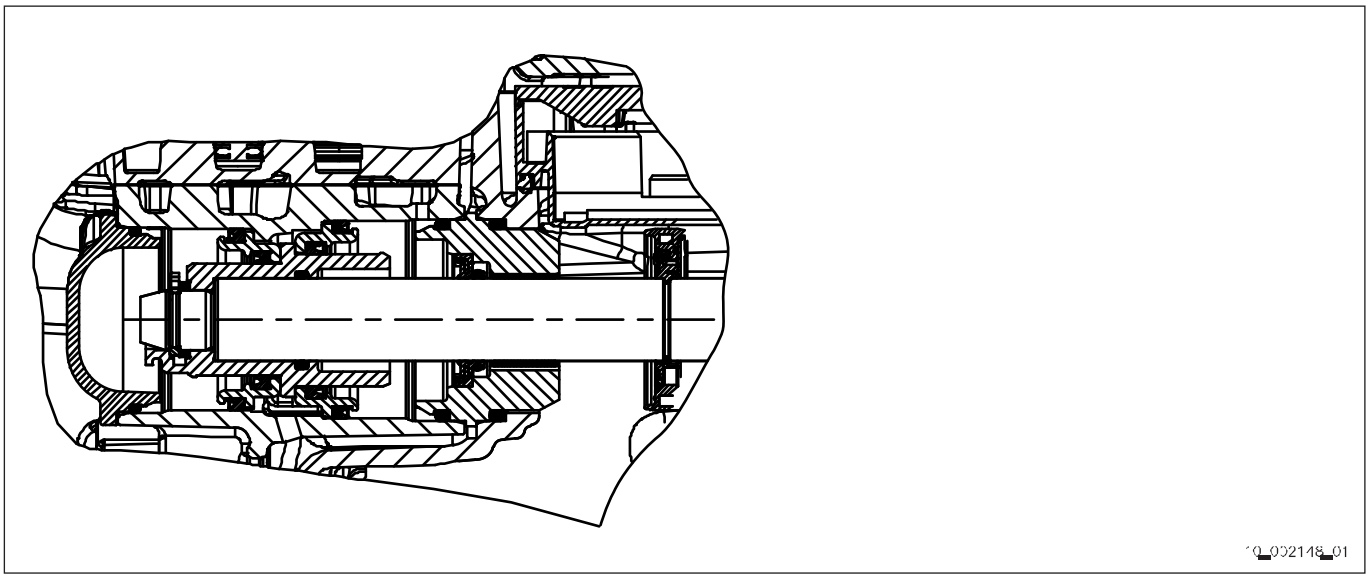

Gear shift piston main transmission (MT piston)

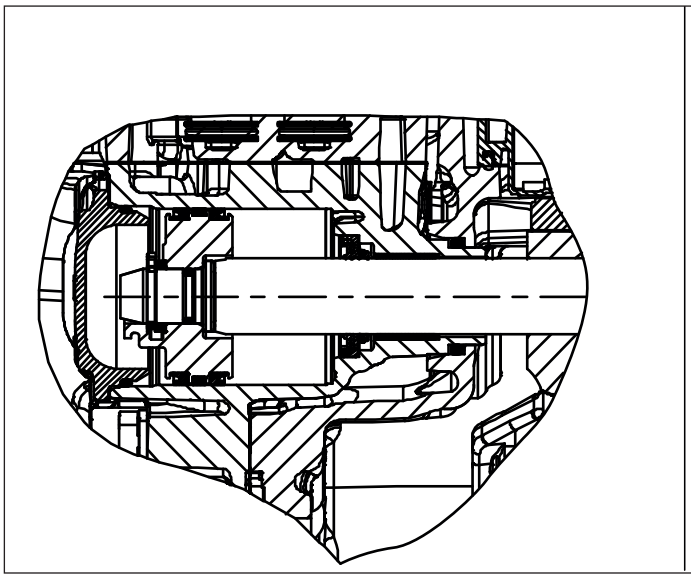

Gear shift piston splitter group (S/G piston)

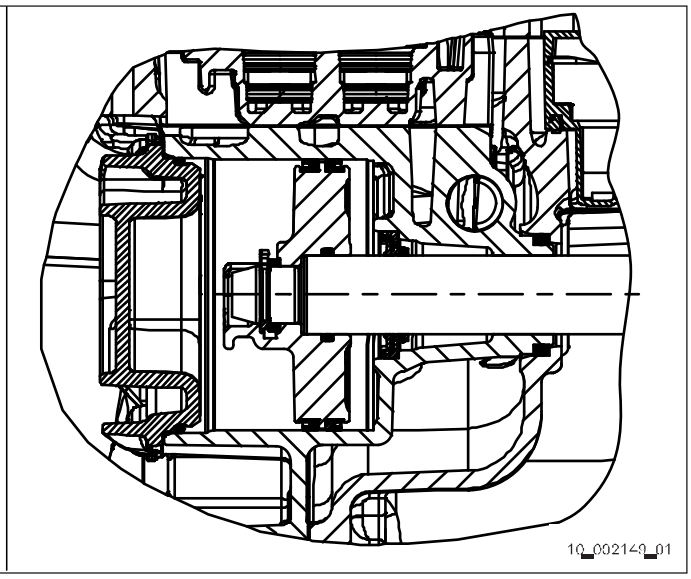

Gear shift piston range change group (R/C piston)

Observe the following:

- If a reference is made to the installation instructions 0000.702.644 (refer to Annex), the lubricating grease RENOLIT CX-TOM 15-OEM shall be used. The specifications of the installation instructions 0000.702.644 shall be complied with. Deviating lubrication might damage the transmission.

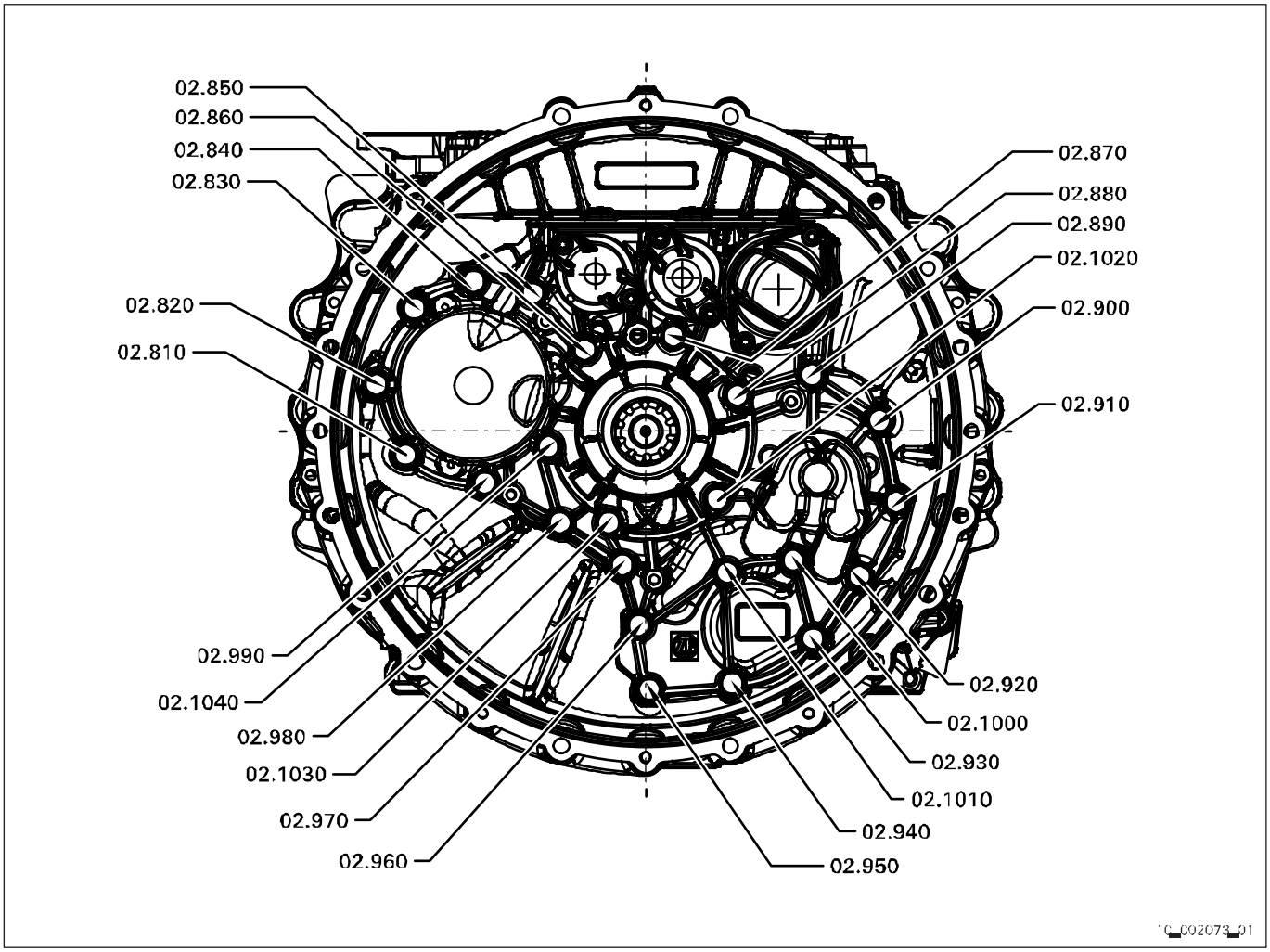

02.810 Hexagon screw **(1)**
02.820 Hexagon screw **(1)**
02.830 Hexagon screw **(1)**
02.840 Hexagon screw **(1)**
02.850 Hexagon screw **(1)**
02.860 Hexagon screw **(1)**
02.870 Hexagon screw **(1)**
02.880 Hexagon screw **(1)**
02.890 Hexagon screw **(1)**
02.900 Hexagon screw **(1)**
02.910 Hexagon screw **(1)**
02.920 Hexagon screw **(1)**
02.930 Hexagon screw **(1)**
02.940 Hexagon screw **(1)**
02.950 Hexagon screw **(1)**

02.960 Hexagon screw **(1)**
02.970 Hexagon screw **(1)**
02.980 Hexagon screw **(1)**
02.990 Hexagon screw **(1)**
02.1000 Hexagon screw **(1)**
02.1010 Hexagon screw **(1)**
02.1020 Hexagon screw **(1)**
02.1030 Hexagon screw **(1)**
02.1040 Hexagon screw **(1)**

Pre-assembling the R/C piston

34.070 R/C piston
- /110 Pistor
- /120 Grooved ring
- /130 Grooved ring
- /140 O-ring
- /150 Supporting ring
- /160 Securing ring

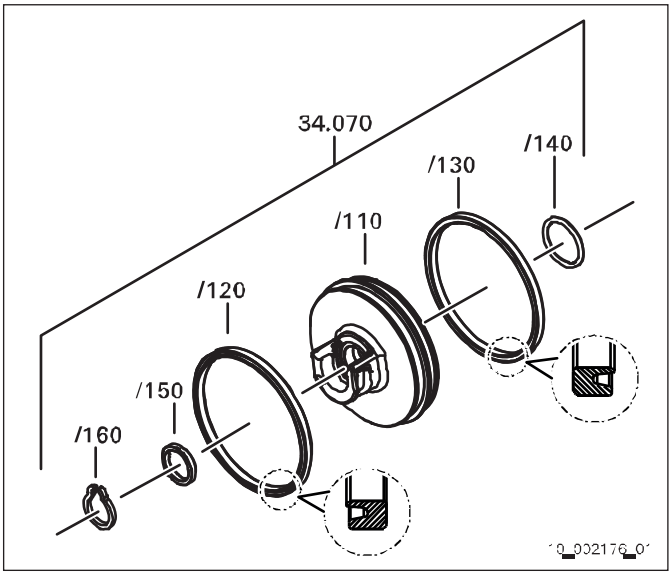

1 Pre-assemble the R/C piston **34.070**. Insert supporting ring **(/150)** into piston **(/110)**.

2 Insert new securing ring **(/160)** using pliers **1X56.138.728**.

Securing ring **(/160)** contacts the supporting ring **(/150)** with the sharp-cornered side.

3 Insert two new grooved rings **(/120)**, **(/130)** into piston **(/110)**.

Ensure correct installation position of the two grooved rings **(/120)**, **(/130)**. The grooved rings' sealing lips face outwards.

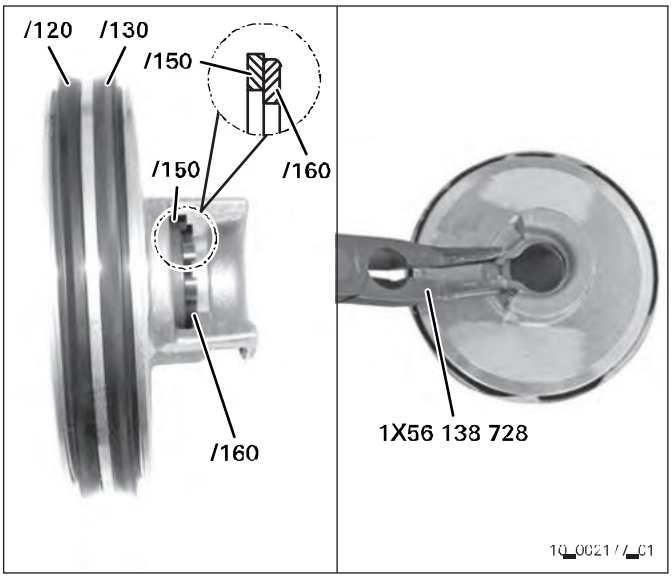

4 Insert new O-ring **(/140)** into piston **(/110)**.

5 Grease R/C piston. Evenly apply lubricating grease according to installation instructions 0000.702.644.
Grease quantity:
- between the two grooved rings **(/120)**, **(/130)** 1.6 grams
- R/C piston inside 0.2 grams

Installation instructions and comparison table for grease quantities, refer to Annex.

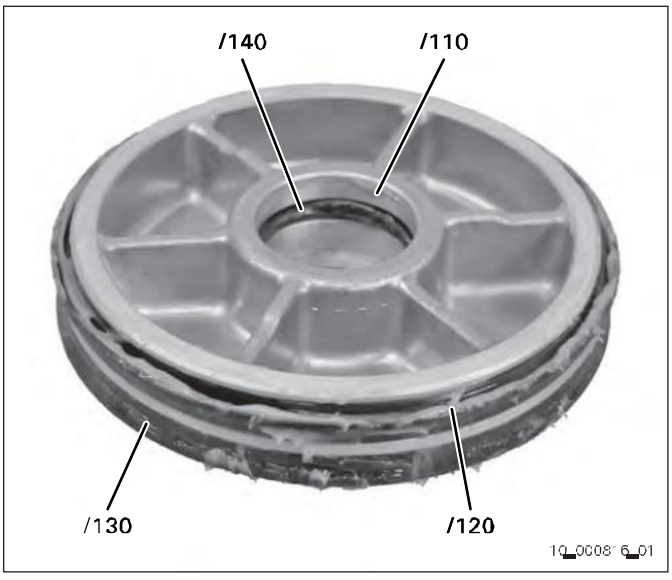

Pre-assembling the S/G piston

12.080 S/G piston
/110 Pistor
/120 Grooved ring
/130 Grooved ring
/136 Guide ring
/150 Supporting ring
/160 Securing ring

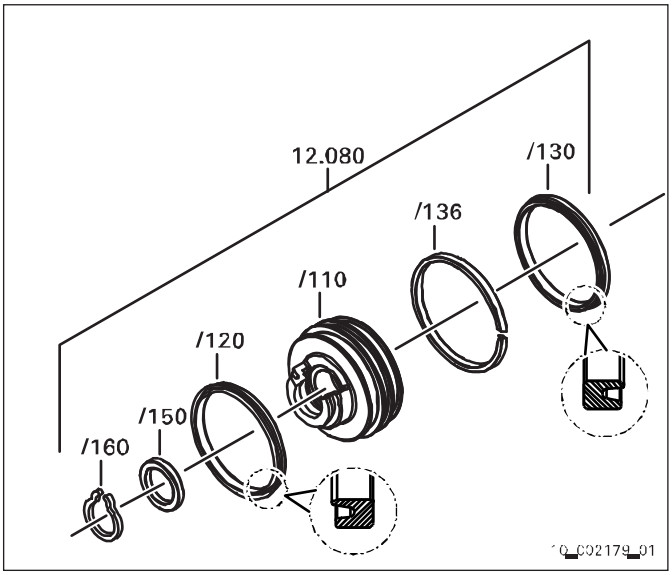

1 Pre-assemble the S/G pistor **12.080**. Insert supporting ring **(/150)** into piston **(/110)**.

2 Insert new securing ring **(/160)** using pliers **1X56.138.728.**

Securing ring **(/160)** contacts the supporting ring **(/150)** with the sharp-cornered side.

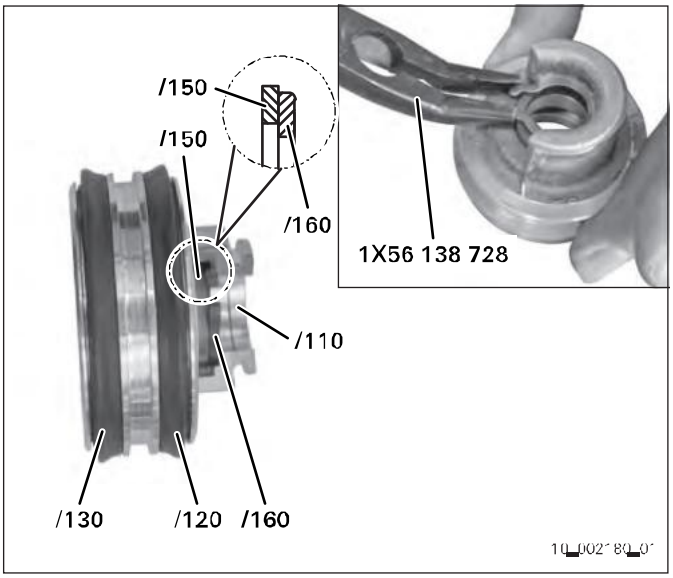

3 Insert two new grooved rings **(/120), (/130)** into piston **(/110)**.

Ensure correct installation position of the two grooved rings **(/120), (/130)**. The grooved rings' sealing lips face outwards.

4 Insert guice ring **(/136)**.

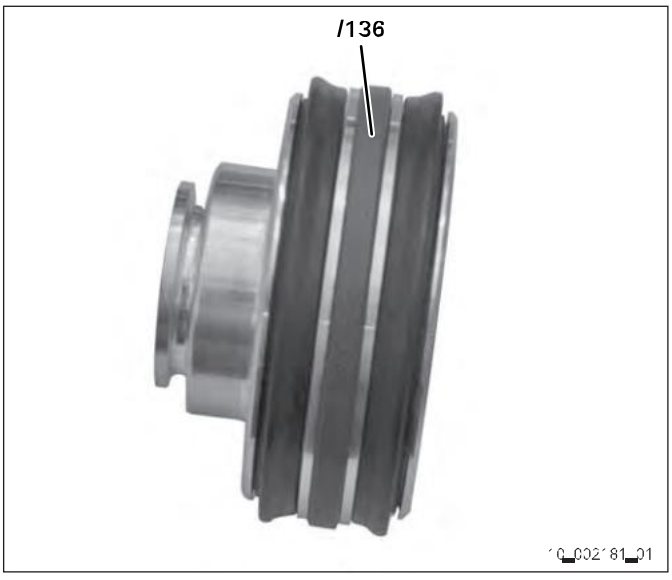

5 Grease S/G piston **12.080**. Evenly apply lubricating grease according to installation instructions 0000.702.644.
Grease quantity:
- between the grooved rings **(/120), (/130)** 1.8 grams.
- S/G piston inside 0.2 grams

Installation instructions and comparison table for grease quantities, refer to Annex.

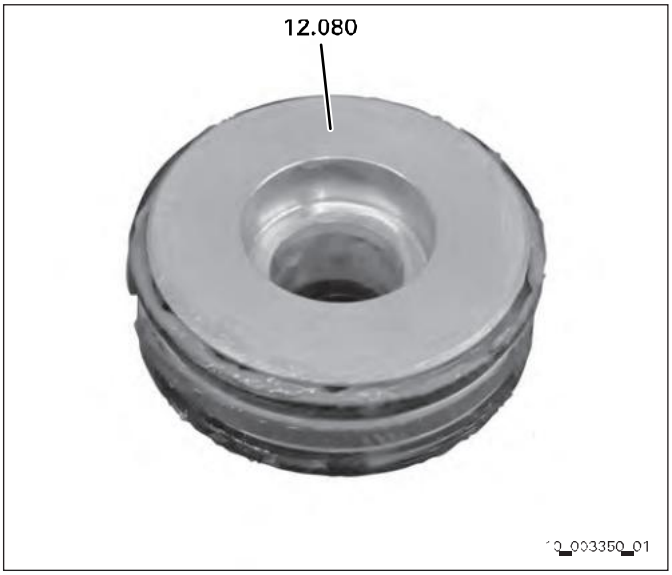

Pre-assembling the MT piston

06.080 Drag piston with grooved ring
/110 Piston
/120 Grooved ring
/130 Grooved ring
06.090 Drag piston with grooved ring
/110 Piston
/120 Grooved ring
/130 Grooved ring
06.100 MT piston
/110 Piston
/120 O-ring
/130 Supporting ring
/140 Securing ring

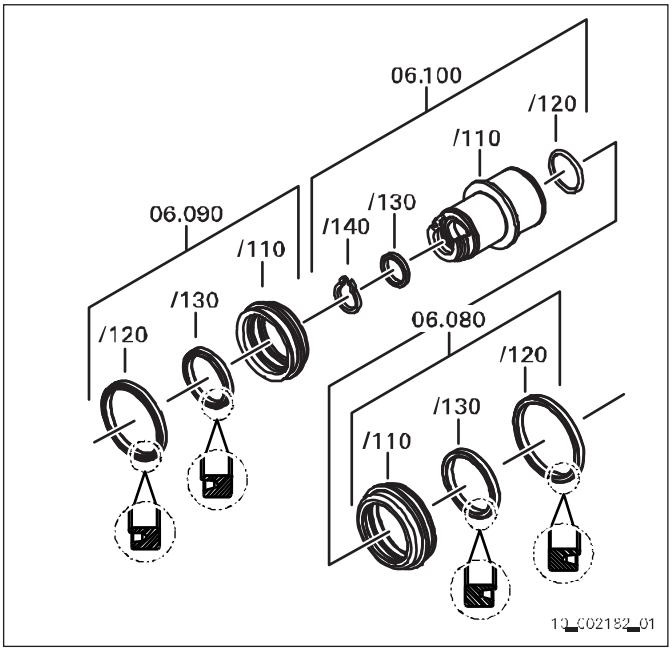

1 Insert two new grooved rings **(/120, /130)** into the two drag pistons **06.080, 06.090**.

Ensure correct installation position of the grooved rings.

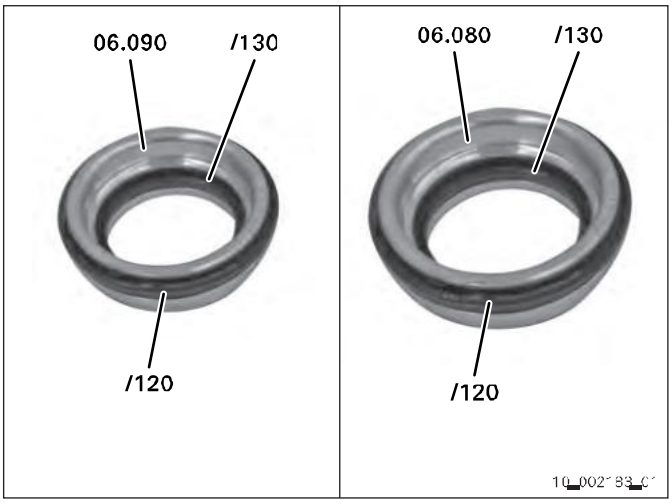

2 Grease grooved rings **(/120, /130)** at both drag pistons **06.080, 06.090**. Evenly apply lubricating grease according to installation instructions 0000.702.644.
Total grease quantity: 1.2 grams *Installation instructions and comparison table for grease quantities, refer to Annex.*



3 Insert supporting ring **(/130)** and new securing ring **(/140)** into MT piston using pliers **1X56.138.728**.

Securing ring **(/140)** contacts the supporting ring **(/130)** with the sharp-cornered side.

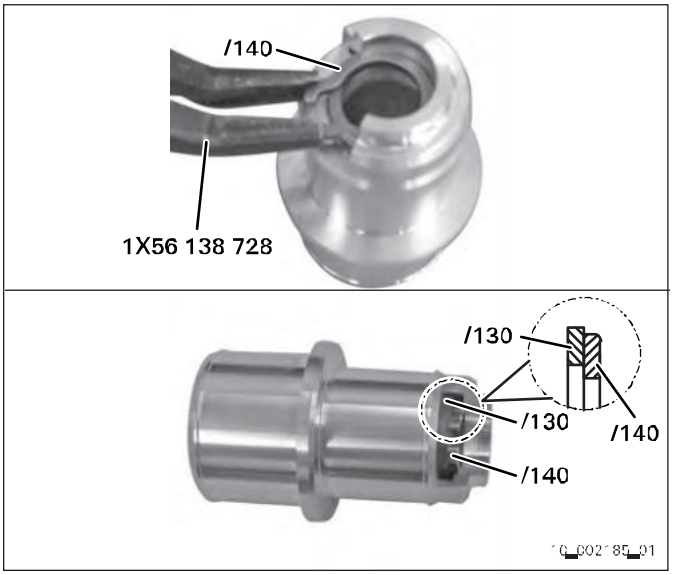

4 Insert O-ring **(/120)** into MT piston **06.100**.

Grease MT piston **06.100** on the inside. Evenly apply lubricating grease according to installation instructions 0000.702.644.
Grease quantity: 0.2 grams
Installation instructions and comparison table for grease quantities, refer to Annex.

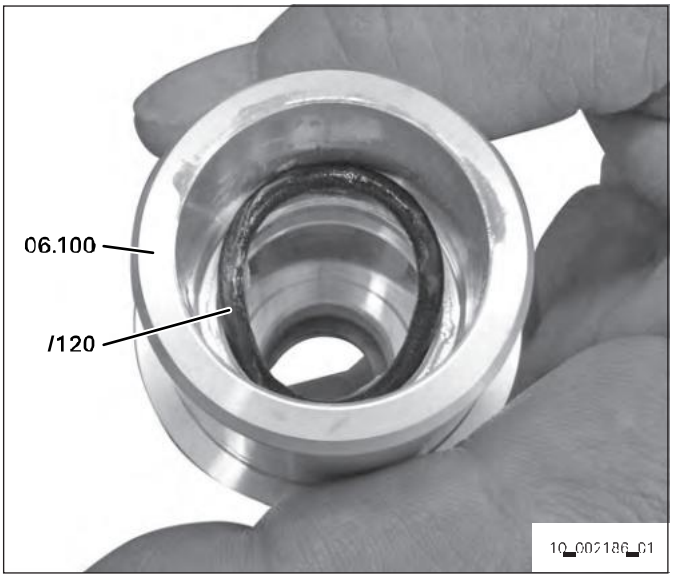

5 Grease MT piston **06.100** on the outside. Evenly apply lubricating grease according to installation instructions 0000.702.644.
Grease quantity: 2.4 grams
Installation instructions and comparison table for grease quantities, refer to Annex.



6 Push on drag piston **06.080** ensuring the correct installation position.

7 Grease bearing surface of MT piston **(1)** once again.
Evenly apply lubricating grease according to installation instructions 0000.702.644.
Grease quantity: 1.2 grams
Installation instructions and comparison table for grease quantities, refer to Annex.

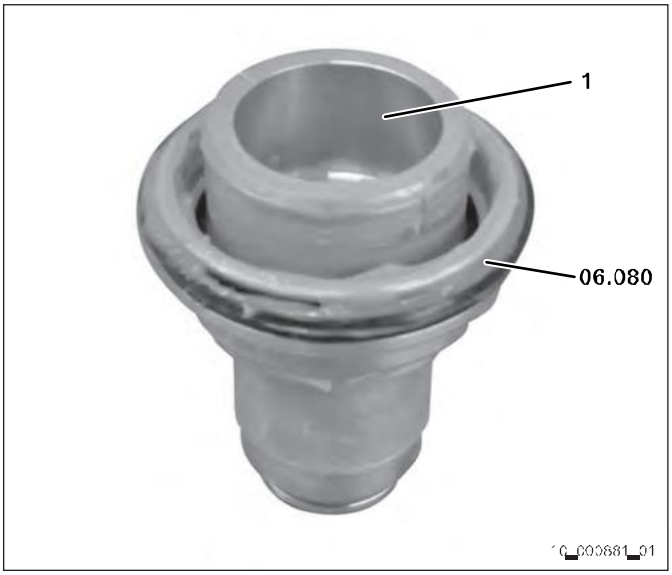

Pre-assembling the plain bearing (cylinder bottom)

06.110 Plain bearing
/110 Cover
/120 O-ring
/130 O-ring
/140 Plain bearing
/150 Cap-shaped seal

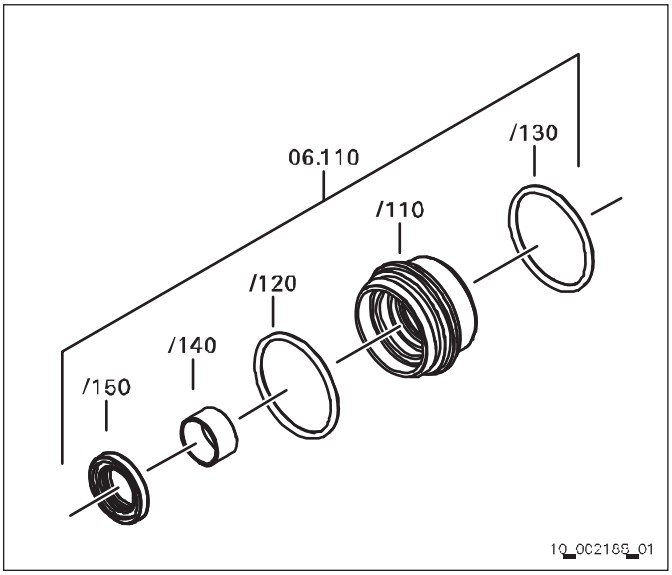

1 **Observe the following:**
- Do not coat the outer circumference of the plain bearing **(/140)** with lubricant.

Press in plain bearing **(/140)** into the cover **(/110)** using the tool **1X56.138.736**.

2 **Observe the following:**
- Do not coat the outer circumference of the cap-shaped seal **(/150)** with lubricant.

Insert cap-shaped seal **(/150)** in dry condition into cover **(/110)** using the adapter **1X56.138.744**.

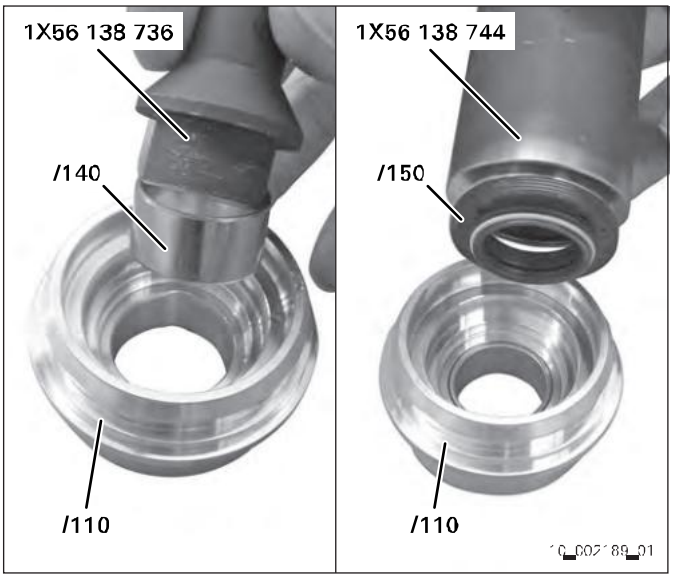

3 Grease the sealing lip of the cap-shaped seal **(/150)**. Evenly apply lubricating grease according to installation instructions 0000.702.644.
Grease quantity: 0.4 grams
Installation instructions and comparison table for grease quantities, refer to Annex.

4 Insert two O-rings **(/120), (/130)**.

5 Lightly grease O-rings **(/120), (/130)** with grease of class A according to 7FN 13000.

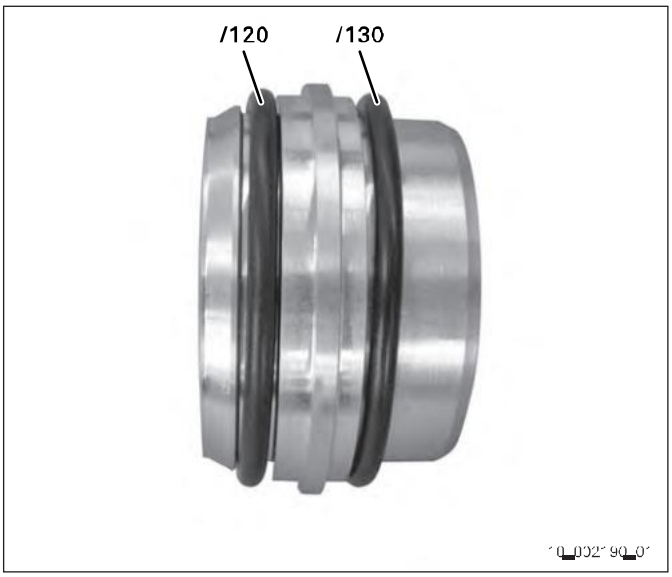

Fitting the connection plate

1 Check if shim **03.012** is placed on the tapered roller bearing's outer ring.

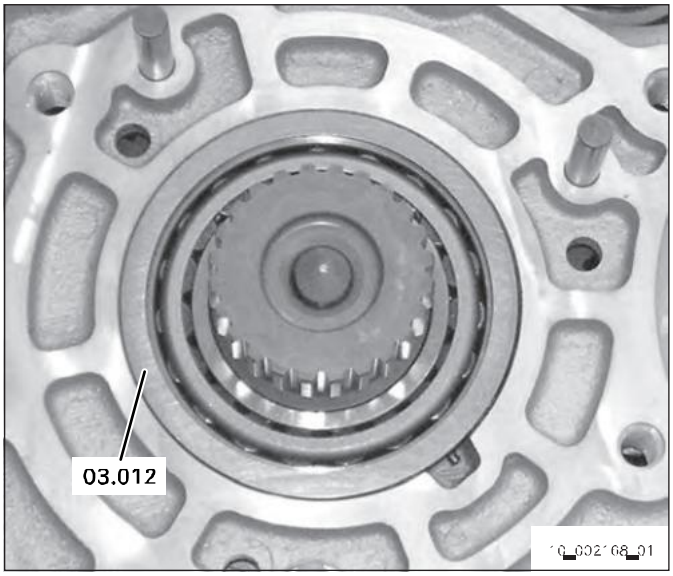

2 Fit brake cover **07.050**.

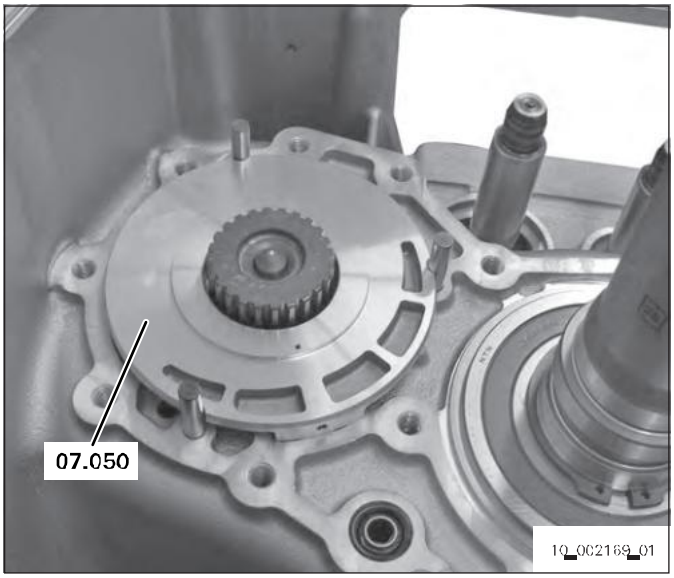

3 Fit multidisk package in the following order:
- Brake cover **07.050**
- Outer clutch disk **07.100**
- Inner clutch disk **07.160**
- Outer clutch disk **07.110**
- Inner clutch disk **07.150**
- Outer clutch disk **07.120**

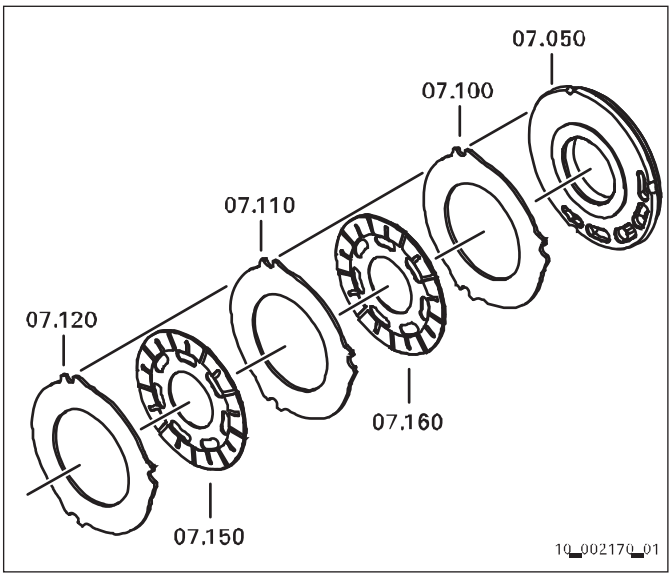

4 Fit new seal **02.800**.

5 Check if shim **03.032** is placed on the tapered roller bearing's outer ring.

6 Either place shim **02.040** on the tapered roller bearing's **02.030** outer ring or glue into connection plate with technical Vaseline.

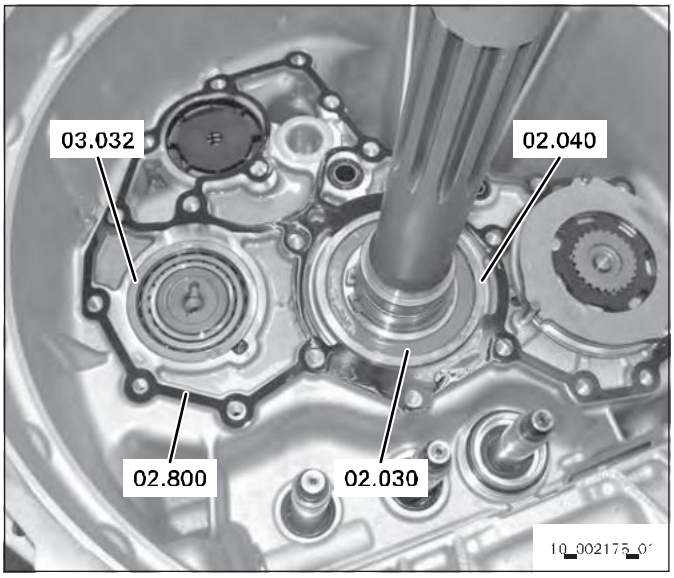

7 Place mounting bush **1X56.138.731** on MT gearshift rail **06.010**.

8 Pull plain bearing **06.110** over the mounting bush until firmly home at the clutch housing.

9 Grease groove **(1)** of the MT gearshift rail. Evenly apply lubricating grease according to installation instructions 0000.702.644.
Grease quantity: 0.2 grams
Installation instructions and comparison table for grease quantities, refer to Annex.

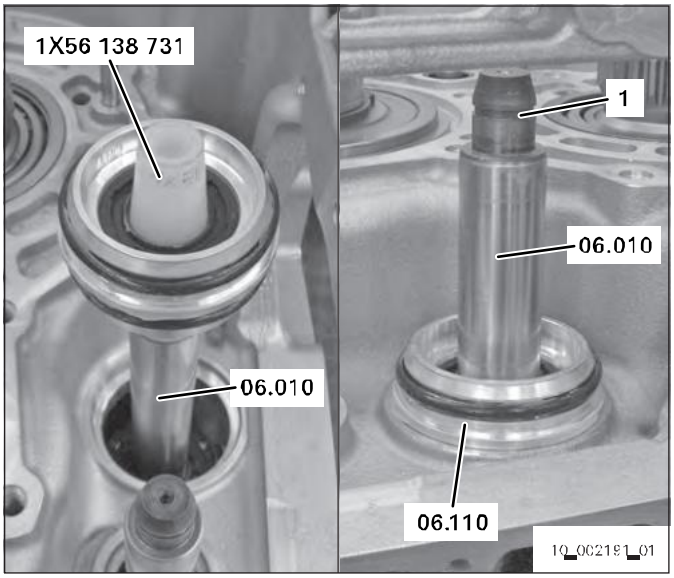

10 Place MT piston **06.100** with drag piston **06.080** on MT gearshift rail.

11 **Observe the following:**
- Securing ring must rest firmly on the gearshift rail's groove base.

Use pliers **1X56.138.803** to snap the new securing ring into the gearshift rail's groove.

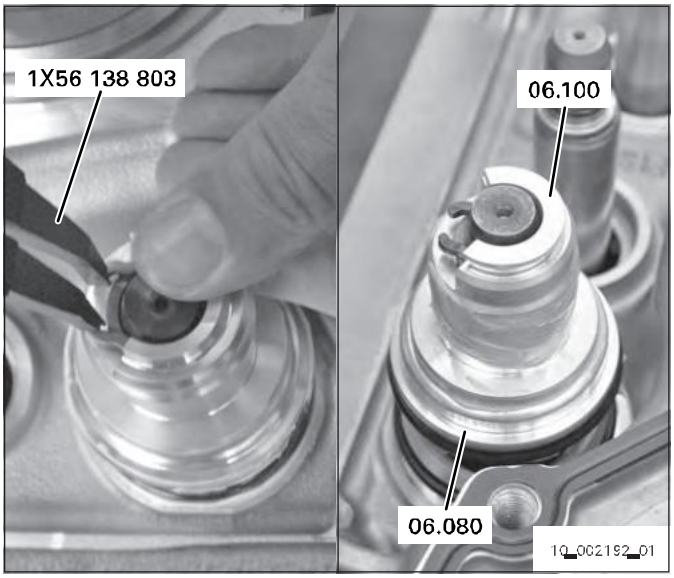

12 Place one mounting bush **1X56.138.731** each on the R/C and S/G gearshift rail.

13 Place protective sleeve **1X56.138.064** on the input shaft.

14 Screw in two guide pins **(1)**.

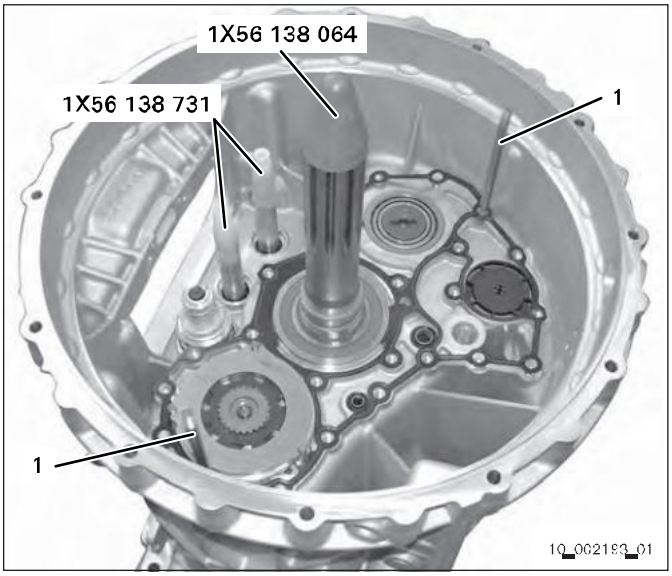

15 Lightly oil the input shaft in the area of the guide seat (see arrow).

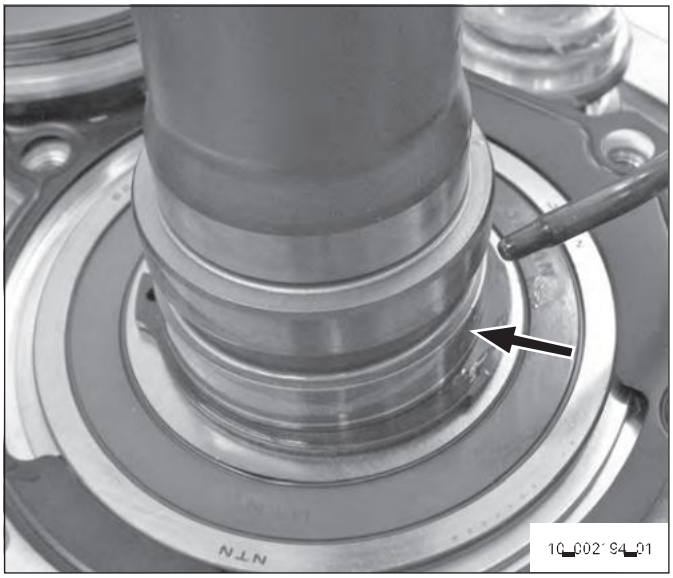

16 Align the driver **(1)** with the arrows **(4)**.

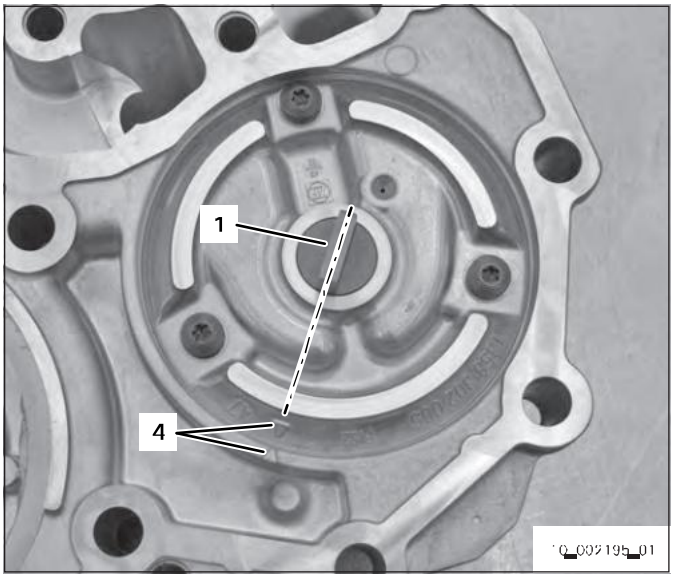

17 Align countershaft groove **(2)** with the recess **(3)** in the clutch housing.

The pump's driver **(1)** must be in line with the groove **(2)** in the countershaft.

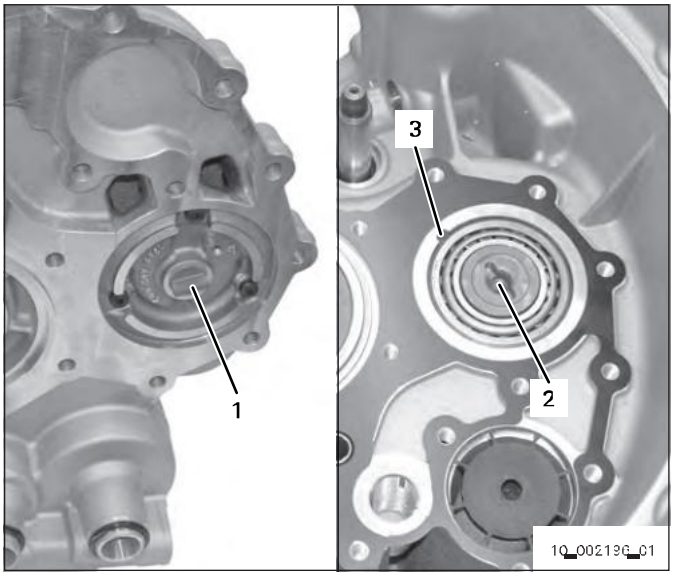

18 Screw two M8 eyelet bolts **1T66.159.409** into the connection plate **02.010** to lift it off.

Observe the following:

- Do not damage cap-shaped seals and O-rings when fitting the connection plate.

Carefully place the connection plate onto the clutch housing.

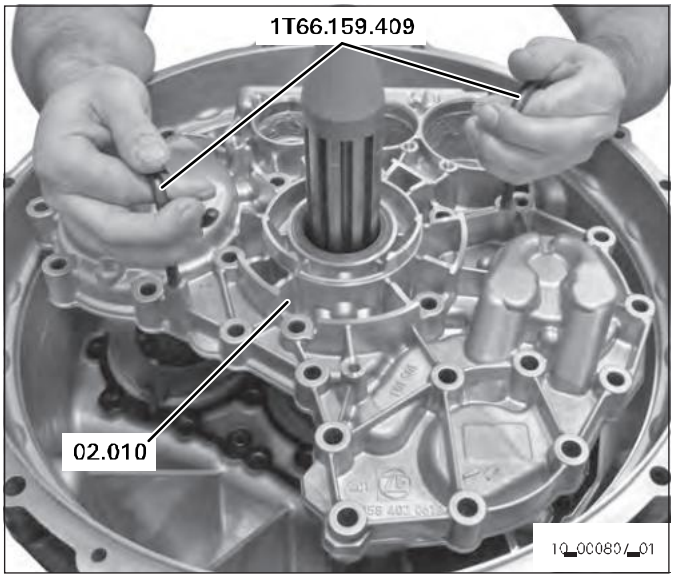

19 Remove the guide pins **(1)**, eyelet bolts and the protective sleeve.

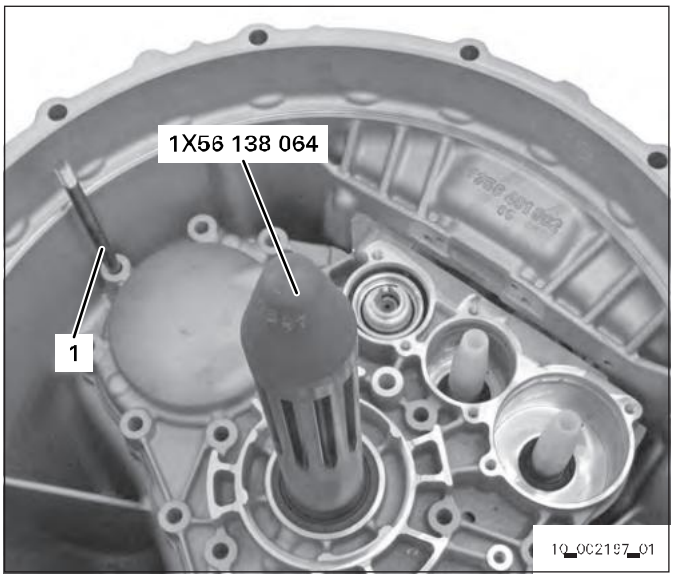

20 Screw on connection plate.
Tighten 24 new micro-encapsulated M10 hexagon screws **(1)** from the inside to the outside.
Tightening torque: **50 Nm**

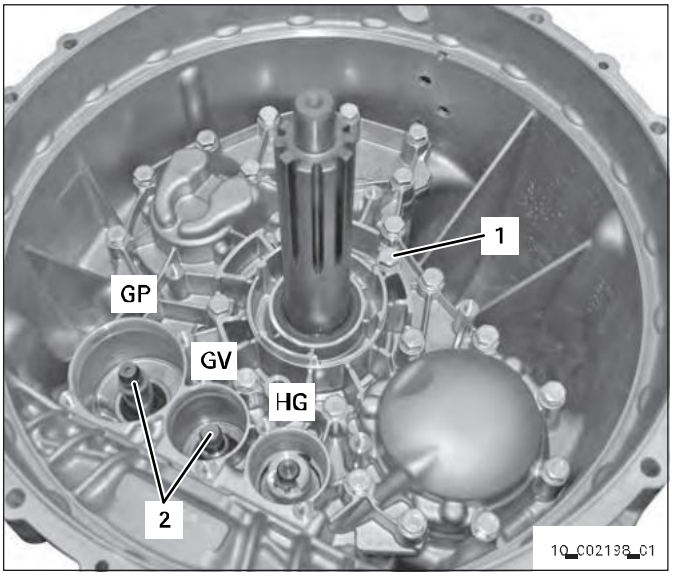

21 Grease groove at the R/C and S/G gearshift rail **(2)**. Evenly apply lubricating grease according to installation instructions 0000.702.644.
Grease quantity per groove: 0.2 grams.
Installation instructions and comparison table for grease quantities, refer to Annex.

22 **Observe the following:**
- Do not damage the grooved rings when inserting the drag piston **06.090**.

Insert drag piston **06.090** into connection plate in correct installation position and slide over MT piston.

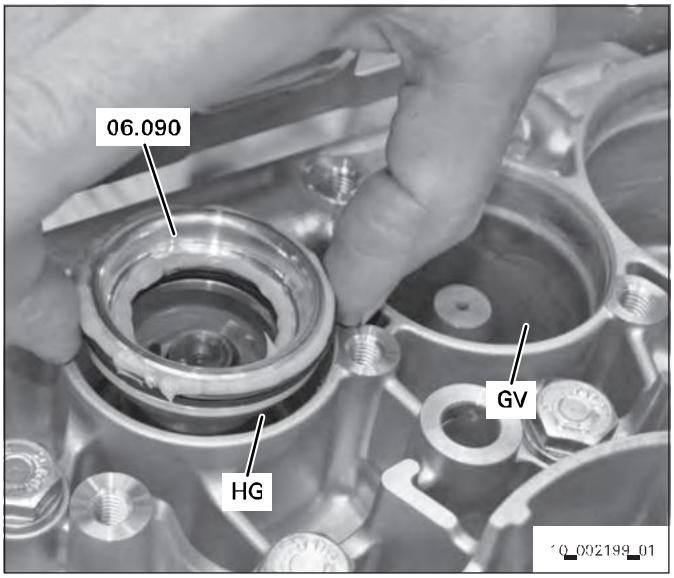

23 **Observe the following:**
- Do not damage the grooved rings when inserting the S/G piston **12.080**.

Insert the completed S/G piston **12.080**.

24 **Observe the following:**
- Securing ring must rest firmly on the gearshift rail's groove base.

Spread the new securing ring **(/160)** using pliers **1X56.138.803**. Press S/G piston down and snap securing ring **(/160)** into the gearshift rail's groove.

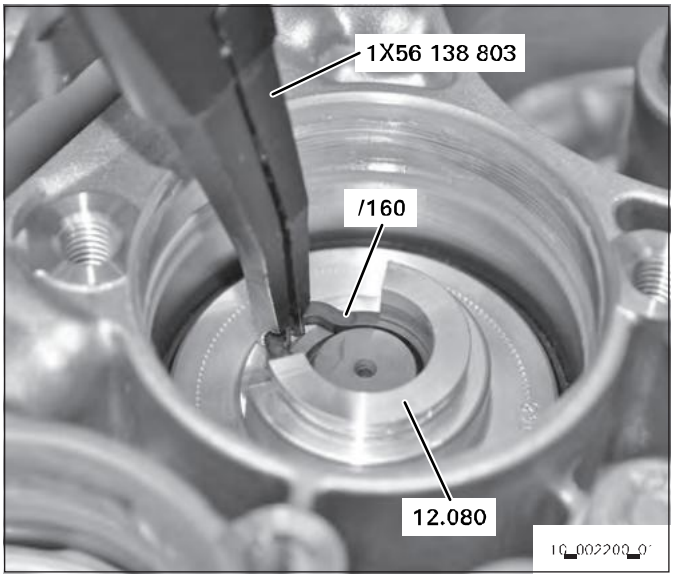

25 **Observe the following:**
- Do not damage the grooved rings when inserting the R/C piston **34.070**.

Insert the completed R/C piston **34.070**.

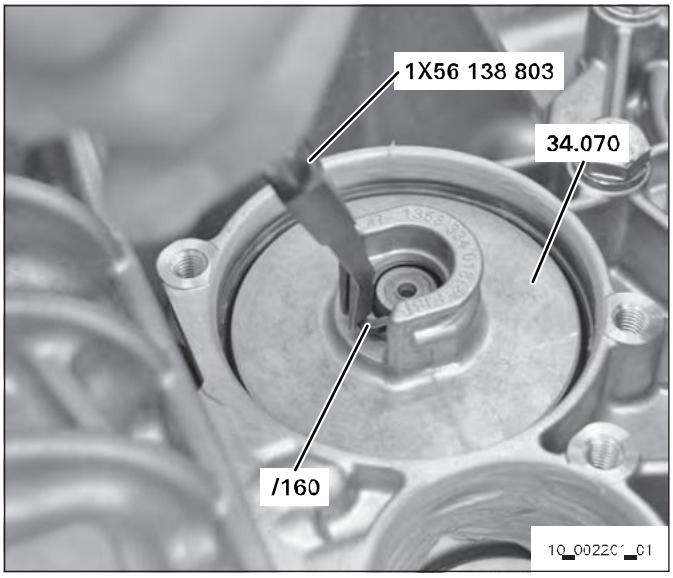

26 **Observe the following:**
- Securing ring must rest firmly on the gearshift rail's groove base.

Spread the new securing ring **(/160)** using pliers **1X56.138.803**. Press R/C piston down and snap securing ring **(/160)** into the gearshift rail's groove.

27 Grease MT piston once again. Evenly apply lubricating grease according to installation instructions 0000.702.644.
Grease quantity: 1.1 grams
Installation instructions and comparison table for grease quantities, refer to Annex.

28 Grease R/C, S/G and MT cylinder contact surfaces once again. Evenly apply lubricating grease according to installation instructions 0000.702.644.
Grease quantity:
1.1 grams for each cylinder contact surface
Installation instructions and comparison table for grease quantities, refer to Annex.

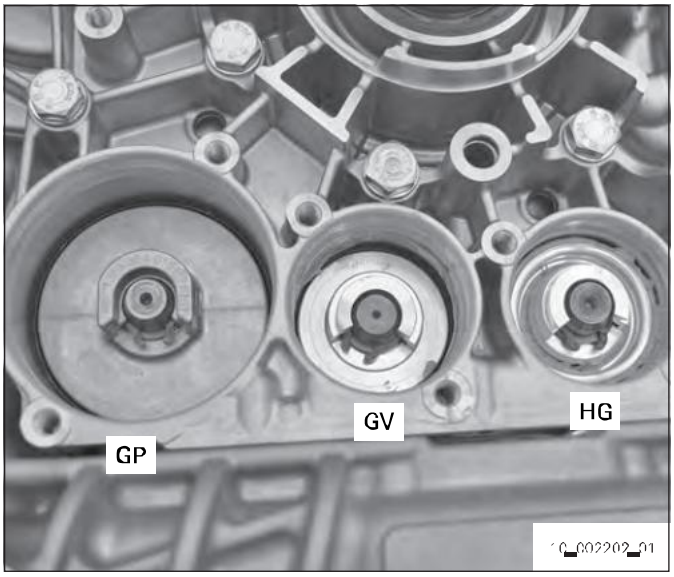

02.1400 MT cover
02.1402 O-ring
02.1410 Torx screw
02.1420 Torx screw
02.1600 S/G cover
02.1602 O-ring
02.1610 Torx screw
02.1620 Torx screw
02.1700 R/C cover
02.1702 O-ring
02.1710 Torx screw
02.1720 Torx screw

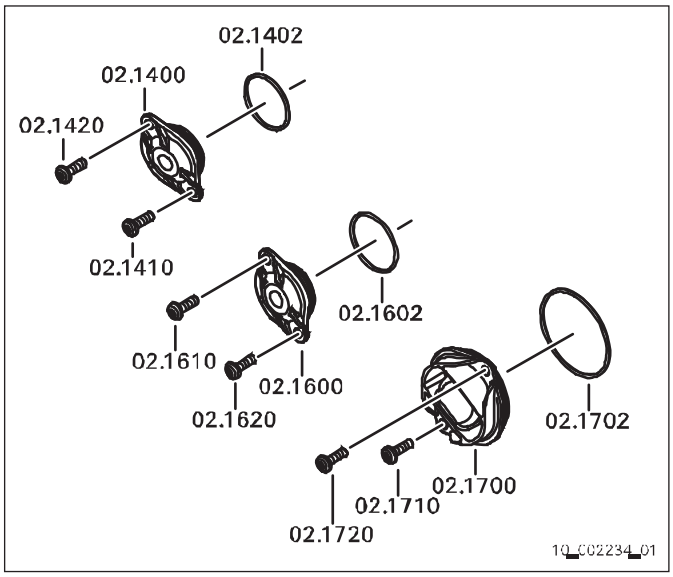

29 Insert new O-rings into covers (R/C, S/G, MT). Lightly grease O-rings with grease of class A according to ZFN 13000.

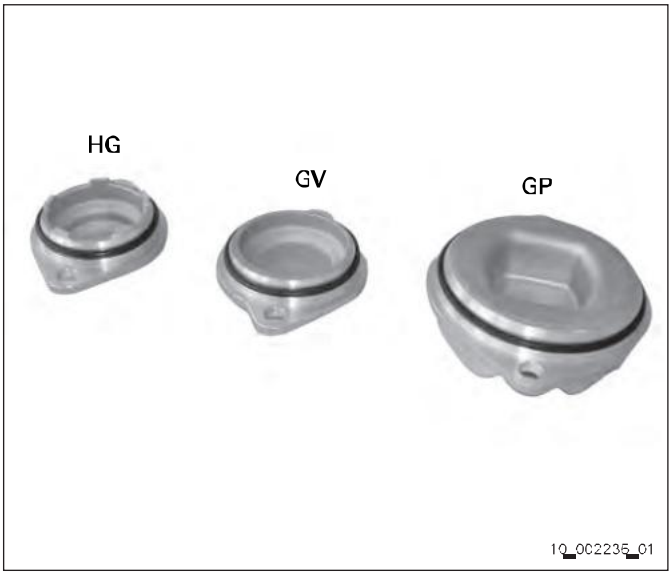

30 Place the covers (R/C, S/G, MT) on the cylinders and secure with two M8 Torx screws respectively.
Tightening torque: **23 Nm**

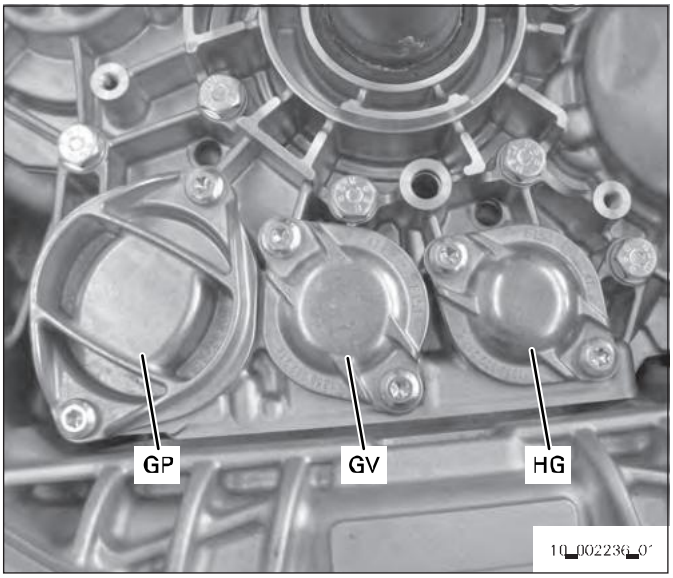

Installing the ConAct

68.010 ConAct
68.020 Sealing ring
68.030 Sensor **(2)**
68.032 Hexagon screw **(3)**
68.034 Hexagon screw **(3)**
68.040 Cap screw **(1)**
68.050 Cap screw **(1)**
68.060 Housing cover
68.100 Torx screw **(4)**
68.110 Torx screw **(4)**
68.120 Torx screw **(4)**
68.130 Torx screw **(4)**

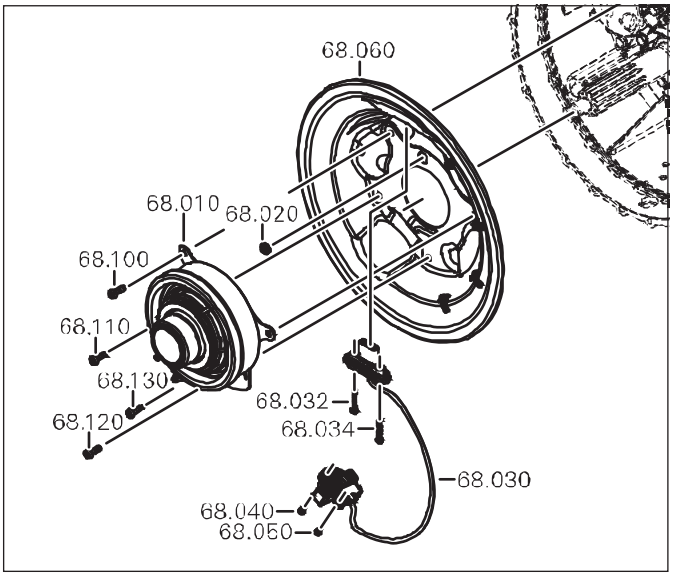

3ba88

1 Place housing cover **68.060** on the housing in correct position.

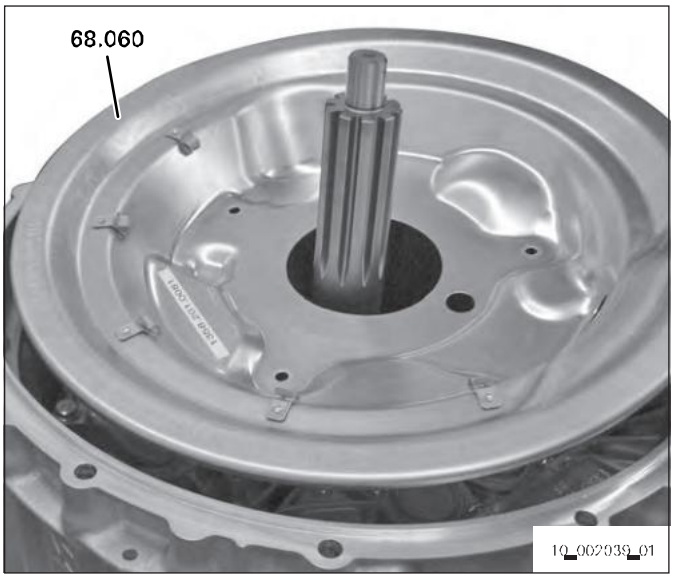

2 Insert sealing ring **68.020**.

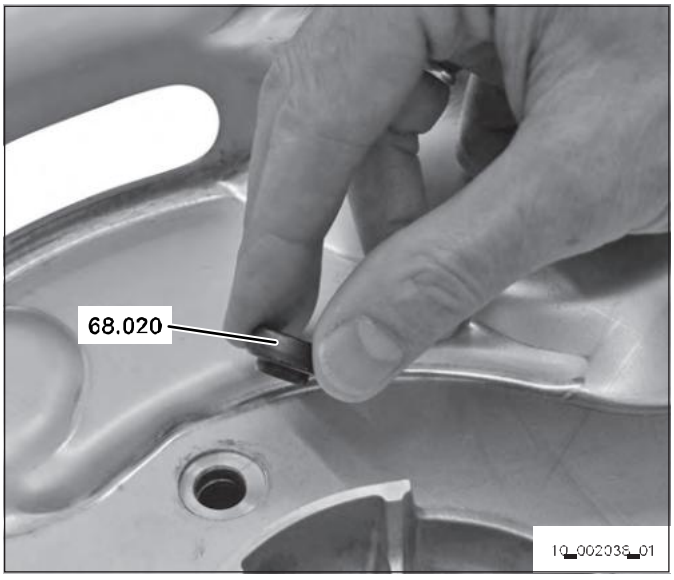

3 Install sensor on the ConAct. Insert sensor **(2)** and secure with two new micro-encapsulated cap screws **(1)**.
M5 tightening torque: **4.5 Nm**

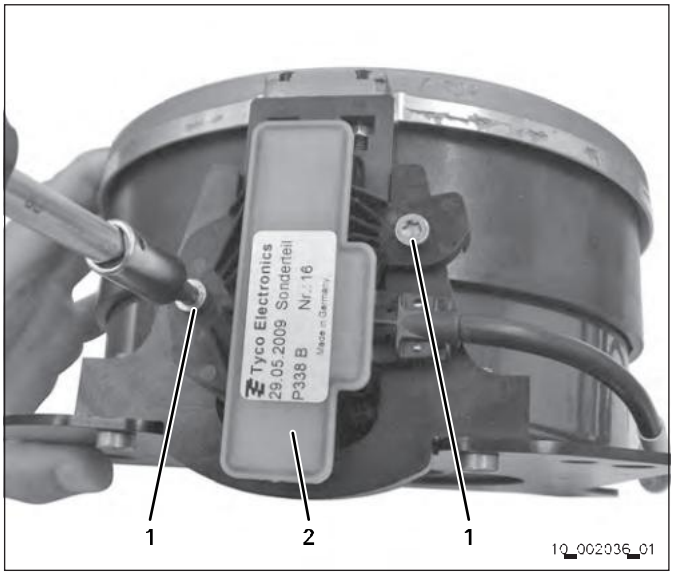

4 Screw in guide pins **(9)**.

5 Carefully place the ConAct **68.010** over the input shaft and guide pins **(9)** onto the transmission.

6 Remove guide pins **(9)**.

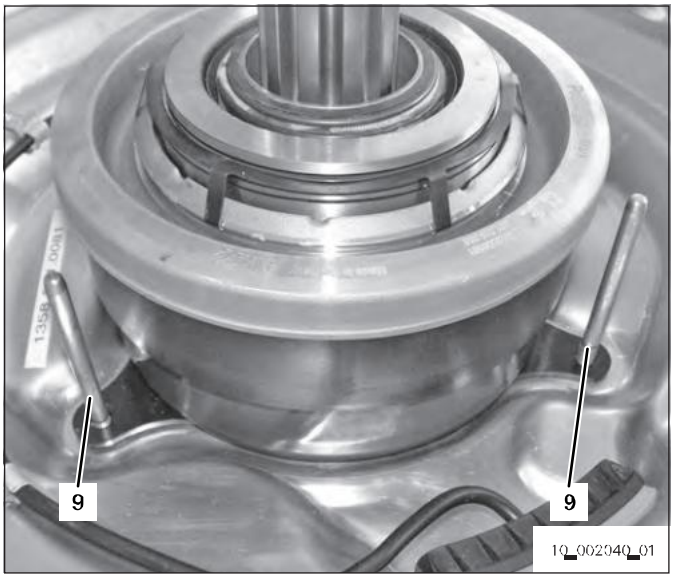

7 Secure ConAct **68.010** with four M8 torx screws **(4)**.
Tightening torque: **23 Nm**

8 Position sensor connector **(10)** and secure with two hexagon screws **(3)**.
M6 tightening torque: **9.5 Nm**

9 Insert cable **(11)** into the cable clips **(12)**.

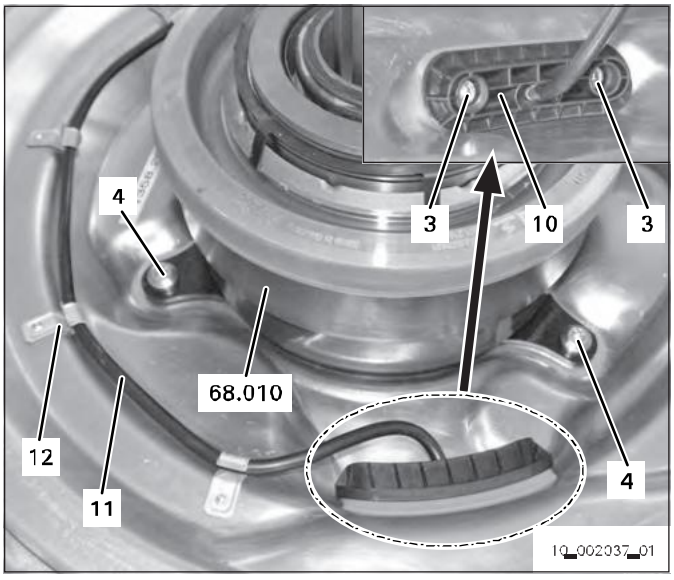

10 After installation, the ConAct is extended.

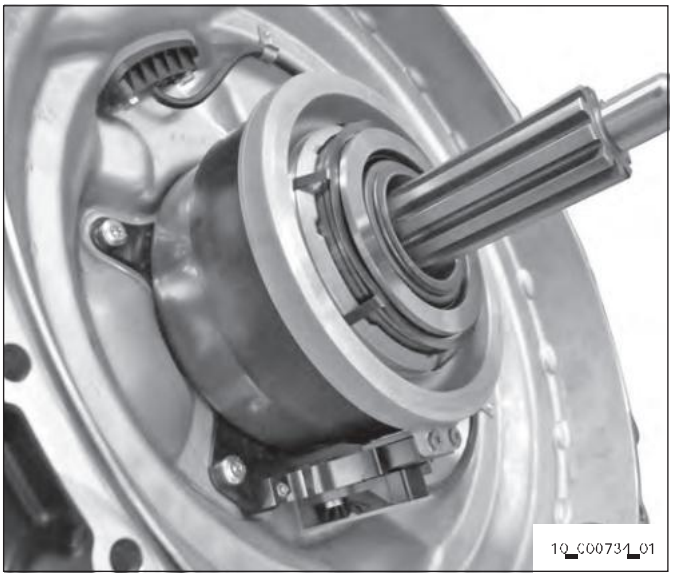

11 Press ConAct back and secure with retaining clamp **(1)**.
The ConAct can only be pressed back if the ConAct has been bled using a diagnosis tool or the valve block has been removed.

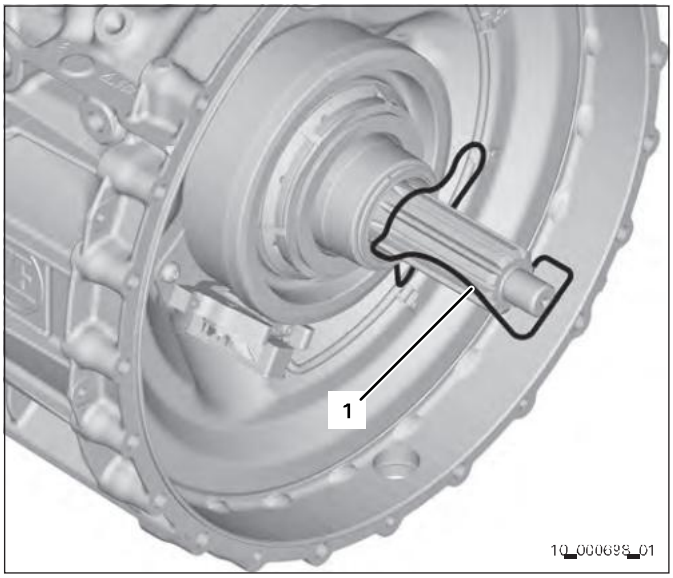

Rotating the transmission by 180°

1 Hook chain sling into transmission lugs (1).

⚠ CAUTION

Risk of injury due to uncontrolled movement of the load.
Slight to moderate injury possible.
⇨ No person must enter the transmission swivel range.

2 Carefully lift the transmission.

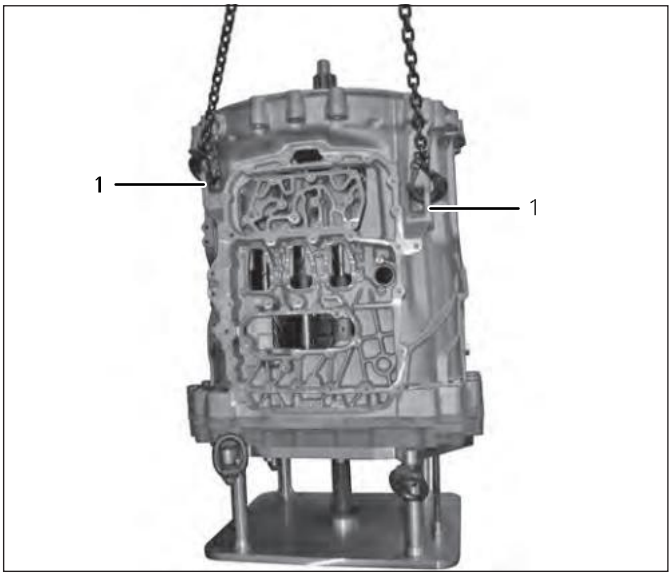

03a 20_1

3 Put the transmission down so that it is in a horizontal position.

4 Remove the chain sling from the transmission lugs (1).

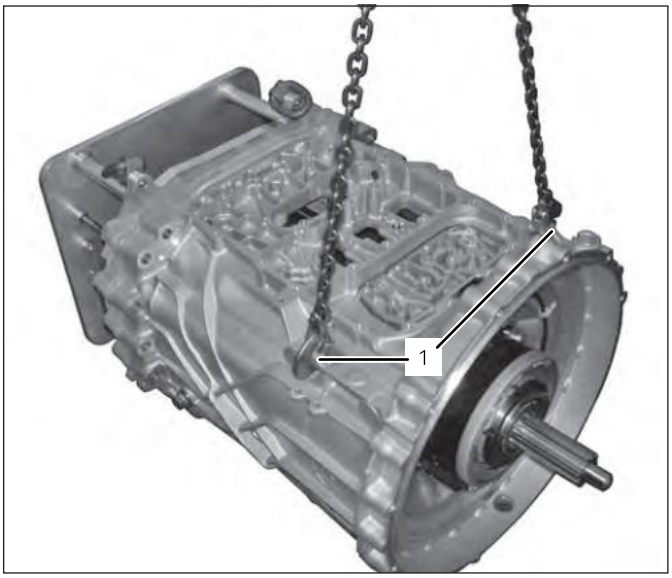

035 19_1

5 Hook the chain sling into the screw-on adapters (2) on the fixture **1X56.138.729**.



03a 18_1

6 **Observe the following:**
- Place a suitably high assembly support (e.g., two squared timbers) on firm, level ground to ensure that the input shaft is not in contact with the workshop floor.

Lift transmission and place it with the clutch bell housing on the assembly support.



035721

7 Remove chain sling.

Observe the following:
- When using the assembly stand **1P01.181.850** remove the four brackets **(1)** from the clamping plate **1X56.197.922**.

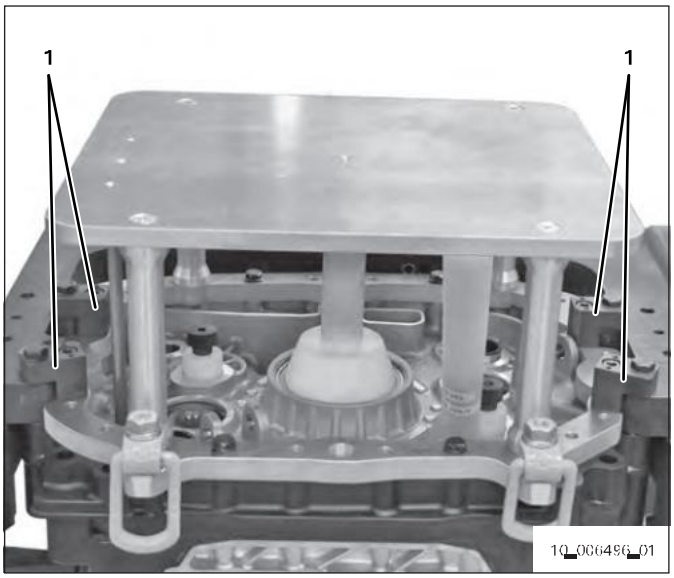

8 Remove the base plate from the assembly fixture **1X56.138.729**.
Do **not** remove screw connection **(3)**.

9 Remove spacer **(4)** for R/C gearshift rail.

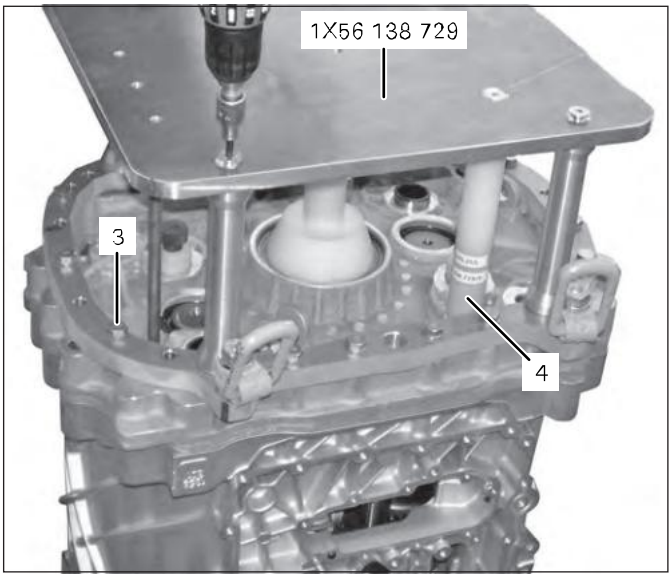

035 22_1

10 Remove centering base **1X56 138 729/1**.

The range change group can be measured.

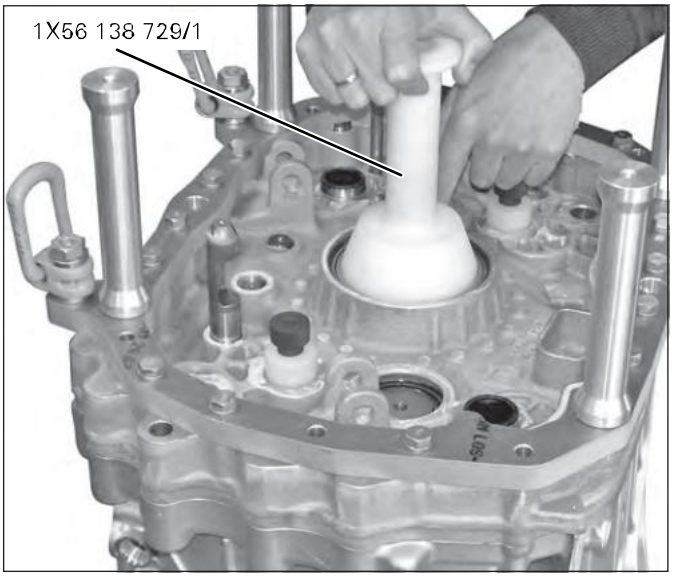

03a 23-1

Installing the range change group

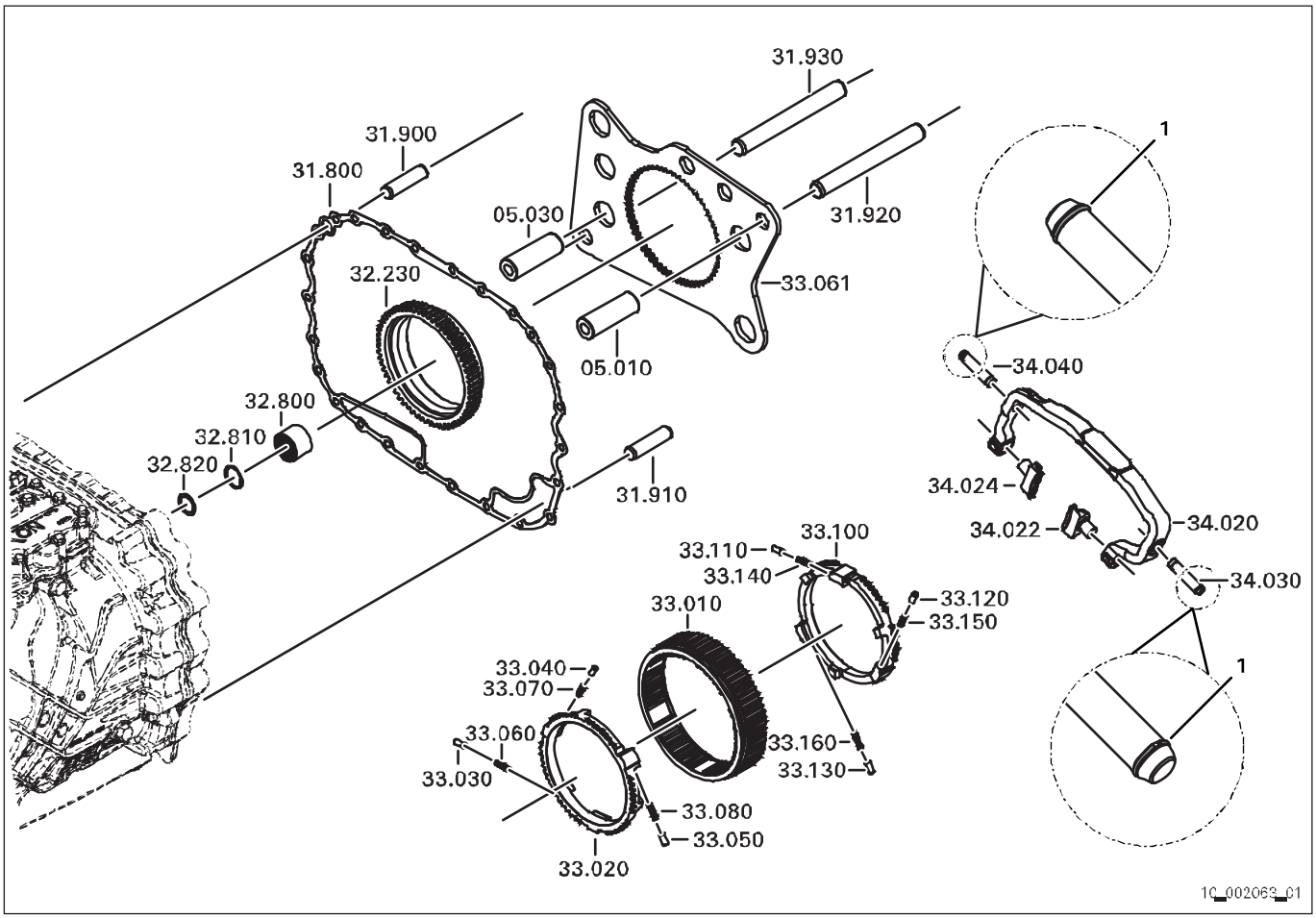

05.010 Reverse idler gear bolt (7)
05.030 Reverse idler gear bolt (7)
31.800 Flat seal
31.900 Cylindrical pin (6)
31.910 Cylindrical pin (6)
31.920 Cylindrical pin (5)
31.930 Cylindrical pin (5)
33.061 Plate
32.230 Clutch body
32.800 Sleeve
32.810 Securing ring
32.820 Shim
33.010 Sliding sleeve
33.020 Synchronizer ring
33.030 Bush (4)
33.040 Bush (4)
33.050 Bush (4)
33.060 Compression spring (3)
33.070 Compression spring (3)
33.080 Compression spring (3)
33.100 Synchronizer ring
33.110 Bush (4)
33.120 Bush (4)
33.130 Bush (4)
33.140 Compression spring (3)
33.150 Compression spring (3)
33.160 Compression spring (3)
34.020 Swing fork
34.022 Sliding pad (2)
34.024 Sliding pad (2)
34.030 Pivot bolt (1)
34.040 Pivot bolt (1)

1 Push back both cylindrical pins **(6)** as far as they will go using suitable tool.

2 Remove both retaining bolts **1X56 138 732** and replace them with reverse idler gear bolts **(7)**.

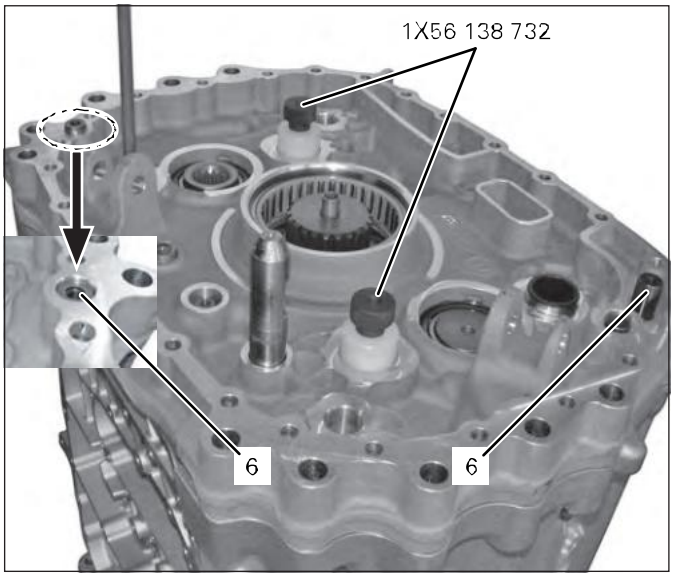

03a 04-1

3 Oil and insert both reverse idler gear bolts **(7)**.

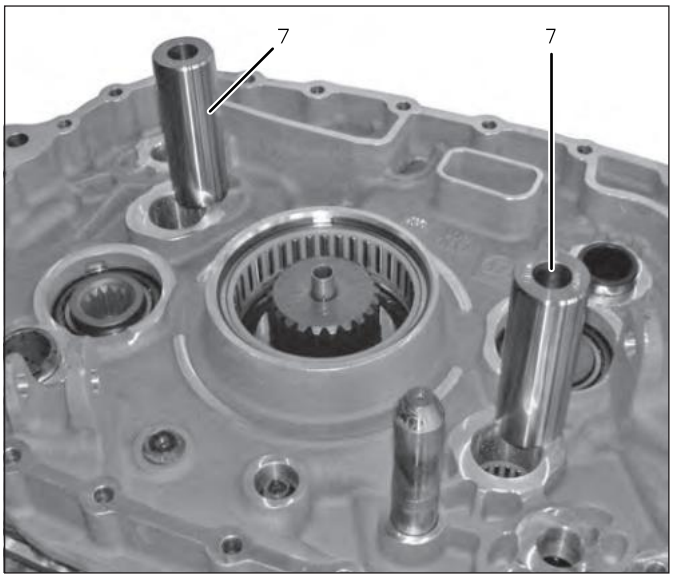

035 06-1

4 Use a plastic hammer to drive in both cylindrical pins **(5)** – thread facing upwards – until firmly home.

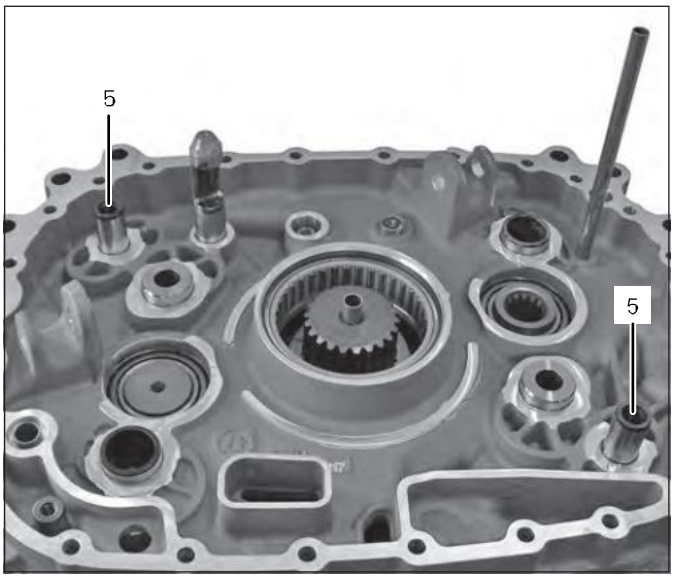

03a 07-1

1358 370
2017-04

5 Check for correct seating of injector tube's seal **10.022**.

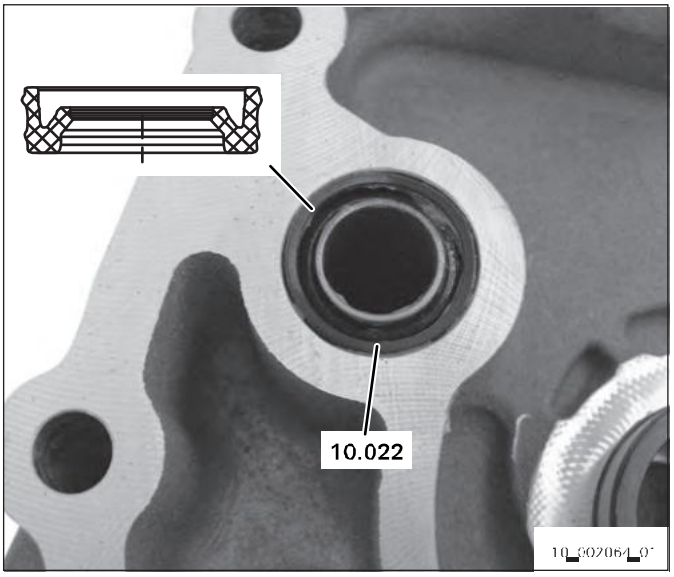

6 Fit clutch body **32.230**.

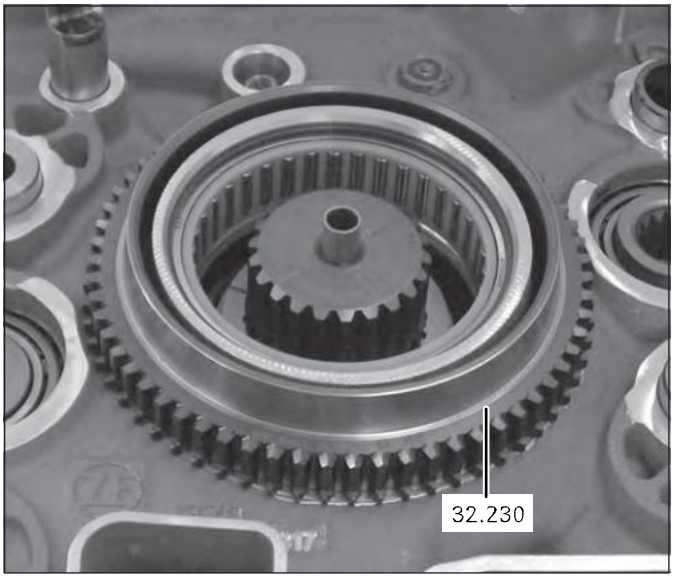

7 Fit plate **33.061**.

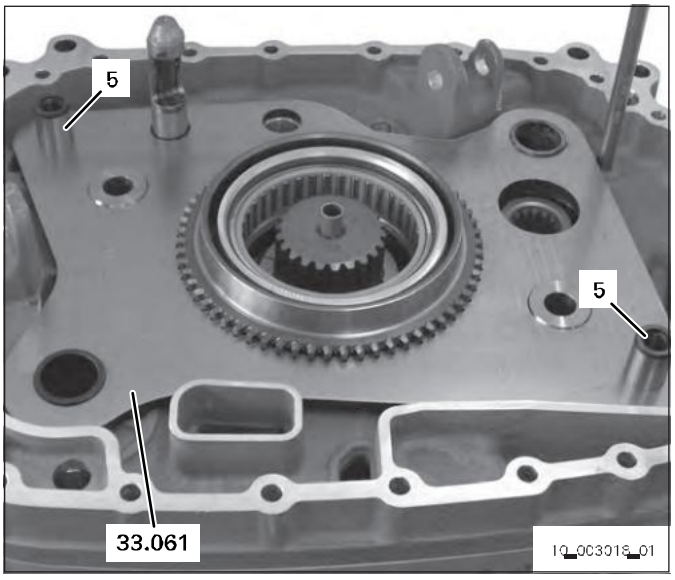

8

⚠ CAUTION

Risk of injury due to parts under spring tension.
Slight to moderate injury possible.
⇨ Wear protective goggles.

Insert three compression springs **(3)** and three bushes **(4)** in the synchronizer rings **33.020, 33.100** and secure with one bracket **1X56.138.207** respectively to prevent them from jumping out.

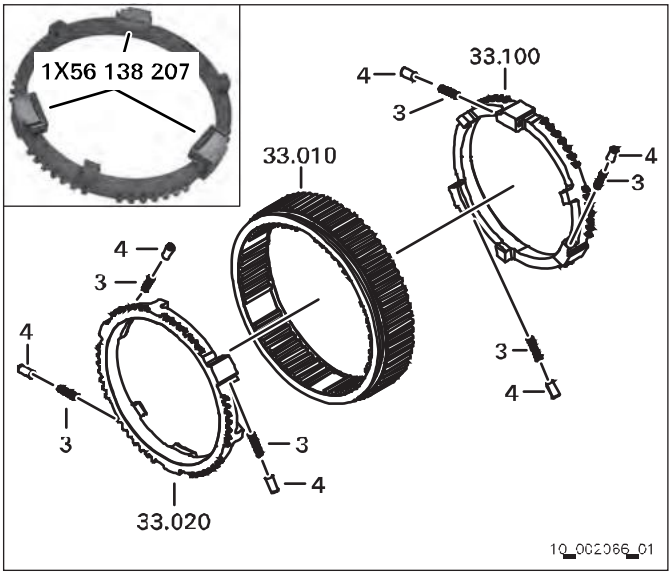

9 Insert synchronizer rings **33.020, 33100** into the sliding sleeve **33.010** and remove bracket **1X56.138.207**.

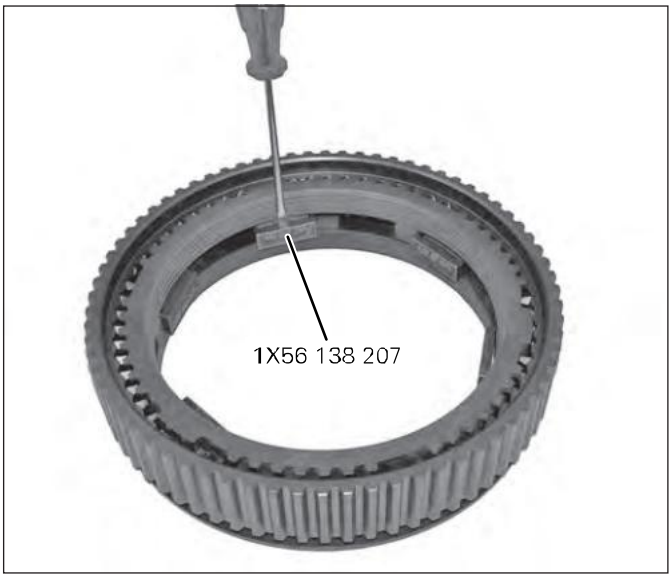

10 Insert sliding pads **(2)** in the swing fork.

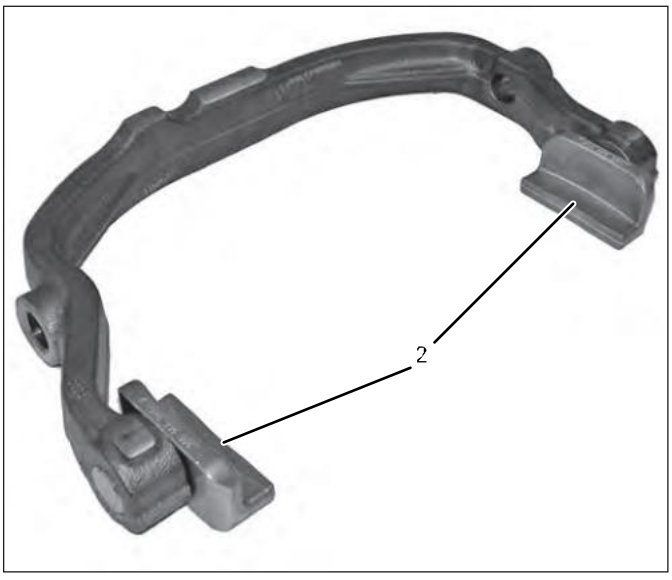

11 A securing ring **(15)** must be installed on both pivot bolts **(1)**.

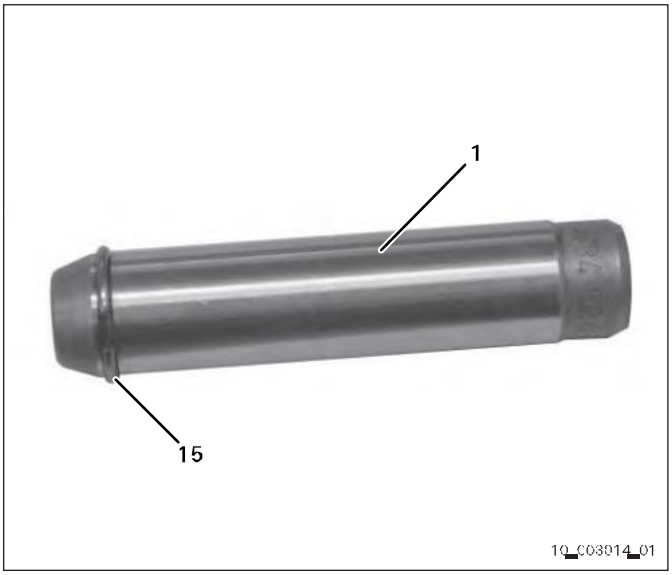

If the transmission is assembled at the assembly stand **1P01.181.850**, insert the pivot bolt first, then fit the securing ring **(15)**. An SW15 box wrench can be used as assembly aid to slide the securing ring **(15)** on the pivot bolt. The securing ring **(15)** must snap into the groove.

12 Place the complete sliding sleeve **33.010** on the clutch body **32.320**.

13 Fit flat seal **31.800** and screw in two M10 guide pins.

14 Observe correct position of the swing fork **34.020**.
Insert the swing fork with sliding pads **(2)** into the sliding sleeve **33.010**.
Position swing fork **34.020** in recess of gearshift rail **(16)**.

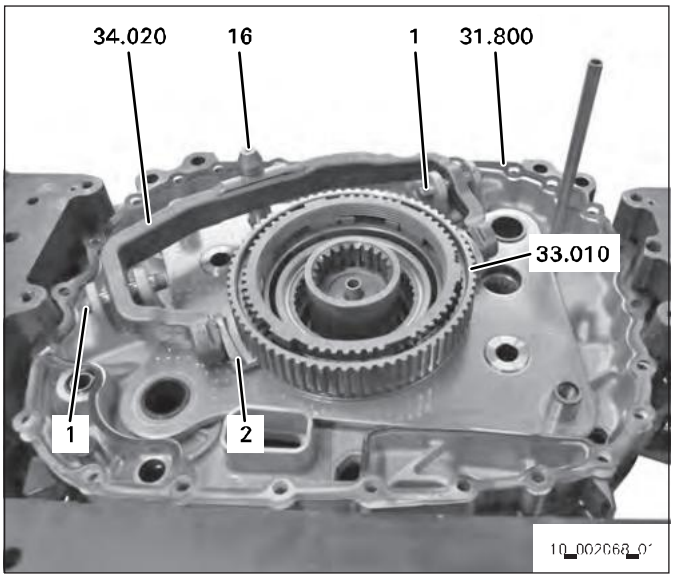

15 Insert both pivot bolts **(1)** in the swing fork **34.020**.

16 Place measured shim **32.820** on the main shaft.

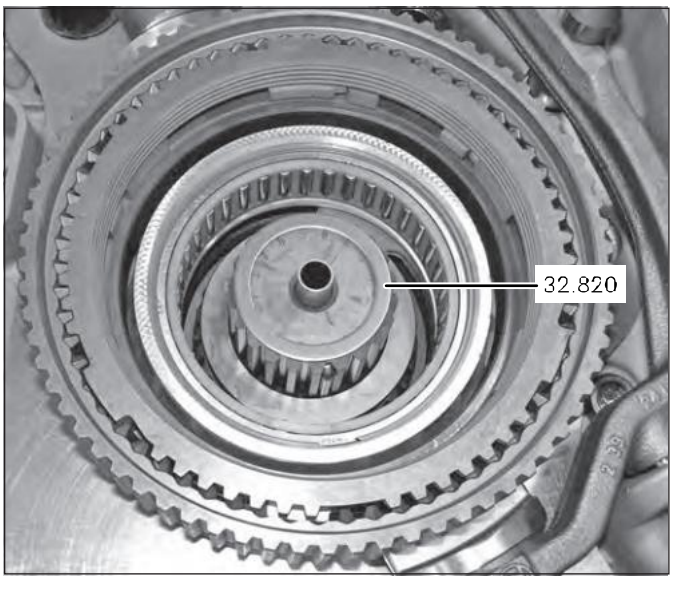

17 Insert securing ring **32.810** into the sleeve **32.800**.

18 Place sleeve **32.800** on main shaft. Ensure that the securing ring **32.810** is placed on the shim **32.820**.

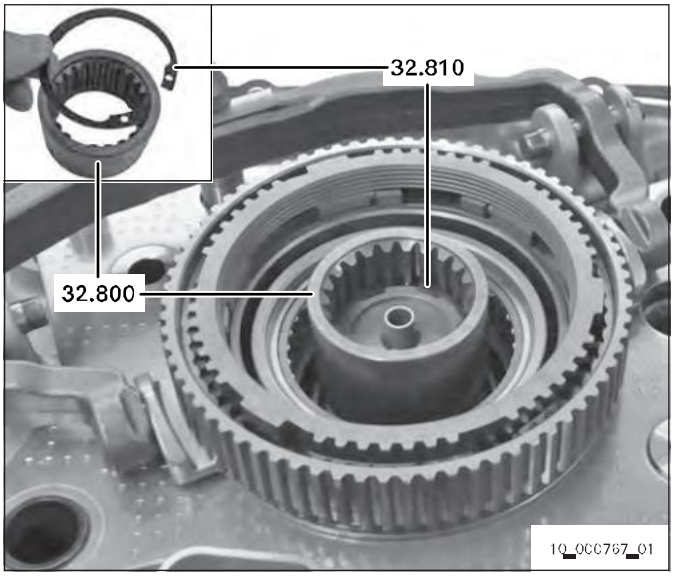

Sun gear

32.020 Sun gear
32.030 Thrust washer
32.032 Driving pin
32.040 Thrust washer
32.042 Driving pin

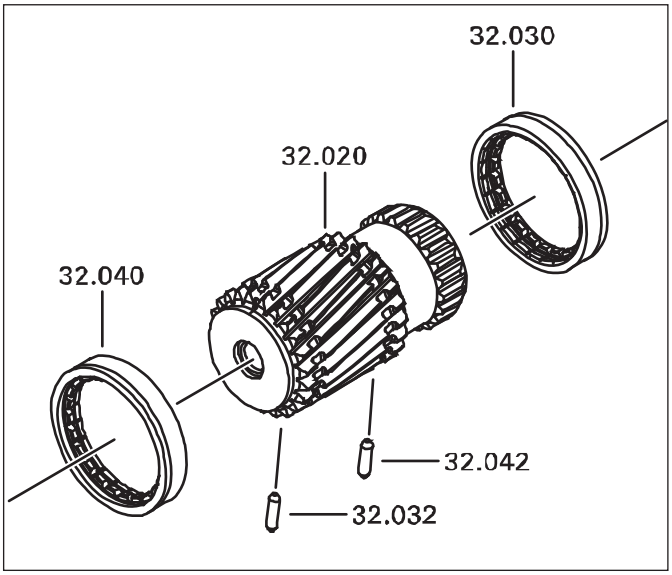

03bab0

Disassembling the sun gear

1 Offset both thrust washers **32.040, 32.030** by half a tooth so that the driving pins **32.042, 32.032** are released.

2 Remove driving pins **32.042, 32.032** and remove thrust washers **32.040, 32.030** from the sun gear **32.020**.

Assembling the sun gear

1 Position thrust washers **32.040, 32.030** – installation position see photo – on the sun gear **32.020**.

2 Insert driving pins **32.042, 32.032** into the sun gear.

3 Slide thrust washers **32.040, 32.030** over the driving pins **32.042, 32.032** and rotate. The driving pins are locked.

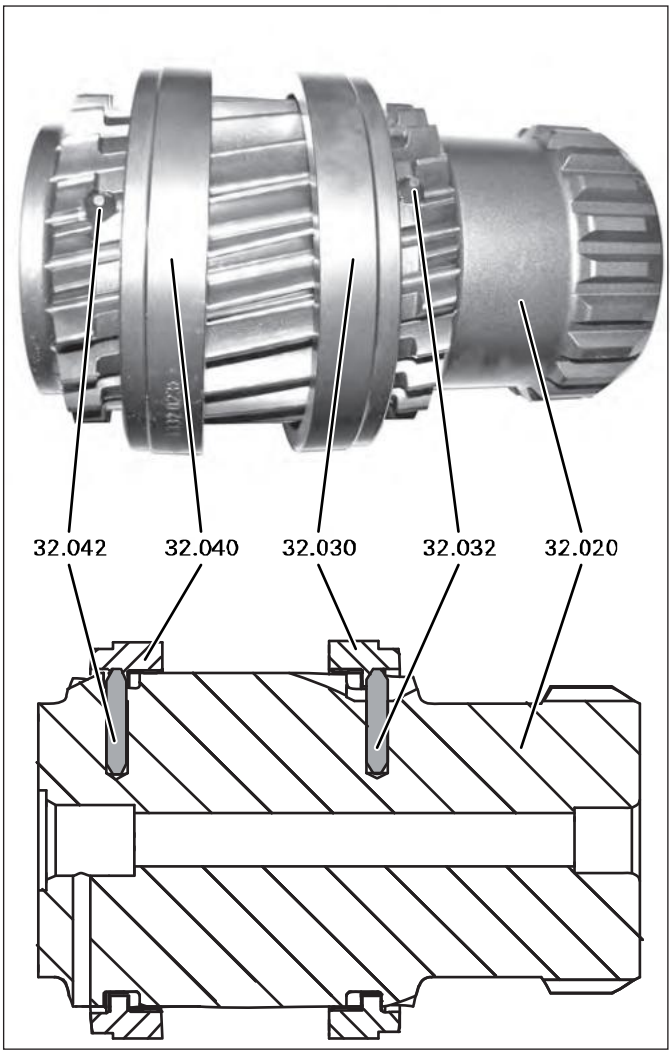

03535[illegible]

Planetary gearset

A planetary gearset consists of five planet gears.

Observe the following:

- Only replace planet gears in sets. If a planet gear from a different planetary gearset is used, this results in damage to the planetary drive.

Pre-assembling the planetary gearset

1 Lightly oil all rollers **32.070** with operating oil or lightly grease the rollers' raceway with technical Vaseline.

2 Insert the thin intermediate disk **32.080** into the planet gear **32.050** and insert 14 rollers **32.070** into the planet gear.

3 Insert the thick intermediate disk **32.100** and, again, insert 14 rollers **32.070** into the planet gear. Finally, add a thin intermediate disk **32.080** on top.

4 These work steps must be performed for all five planet gears.

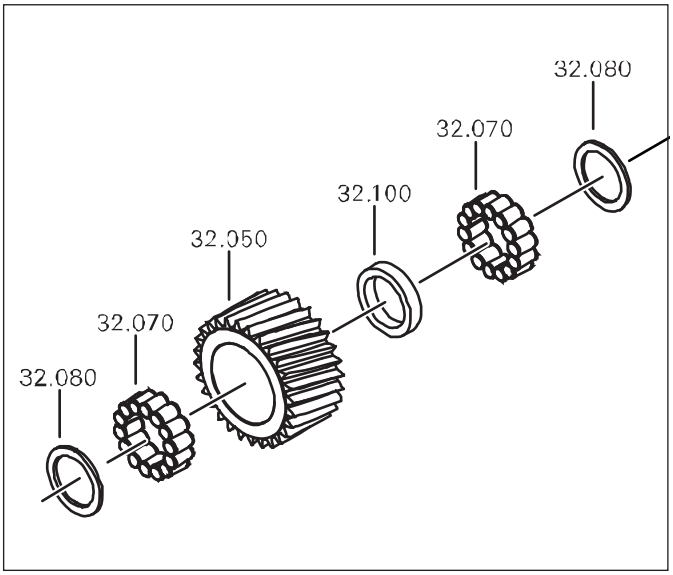

035642



035670

Assembling the planet carrier

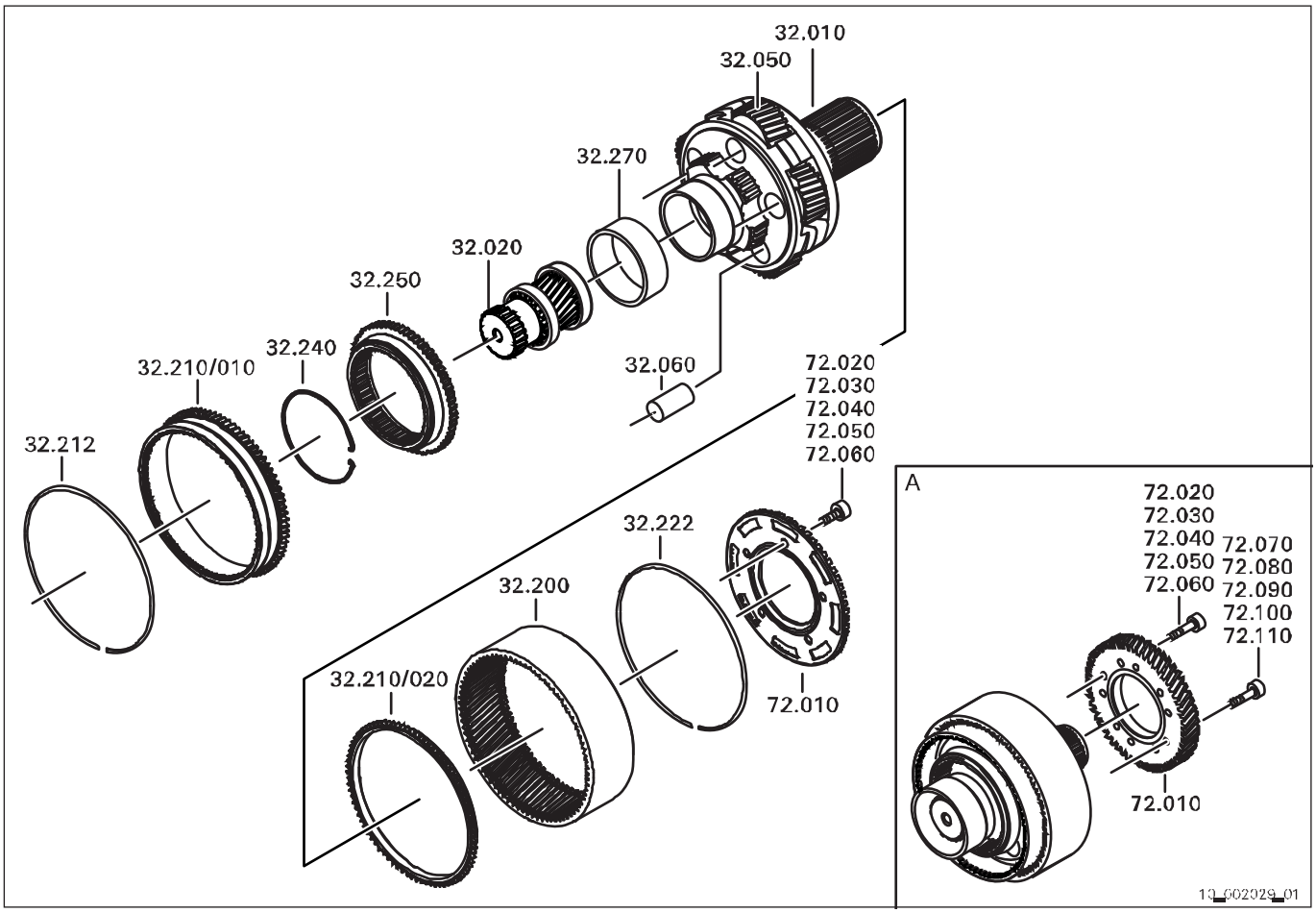

32.010 Planet carrier
32.020 Sun gear cpl.
32.050 Planetary gearset
32.060 Planetary bolt
32.200 Ring gear
32.210/010 Ring gear carrier
32.210/020 Thrust ring
32.212 Locking wire
32.222 Locking wire
32.240 Securing ring
32.250 Clutch body
32.270 Inner ring of needle roller bearing

TRAXON without INTARDER

72.010 Counting disk
72.020 Cap screw **(2)**
72.030 Cap screw **(2)**
72.040 Cap screw **(2)**
72.050 Cap screw **(2)**
72.060 Cap screw **(2)**

TRAXON with INTARDER

72.010 Helical gear (step-up gear)
72.020 Cap screw **(1)**
72.030 Cap screw **(1)**
72.040 Cap screw **(1)**
72.050 Cap screw **(1)**
72.060 Cap screw **(1)**
72.070 Cap screw **(1)**
72.080 Cap screw **(1)**
72.090 Cap screw **(1)**
72.100 Cap screw **(1)**
72.110 Cap screw **(1)**

A: with INTARDER

1

⚠ CAUTION

Risk of burns due to contact with hot surfaces.
Slight to moderate injury possible.
⇨ Wear protective gloves.

Heat bearing inner ring **32.270** to max. 120°C and slide onto planet carrier until firmly home.



2 Support the pre-assembled sun gear **32.020**.

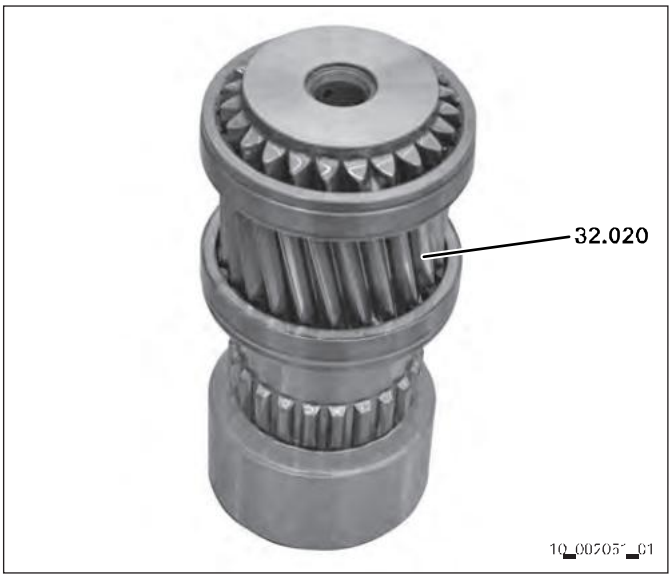

3 Place the planet carrier **32.010** over the pre-assembled sun gear **32.020**.

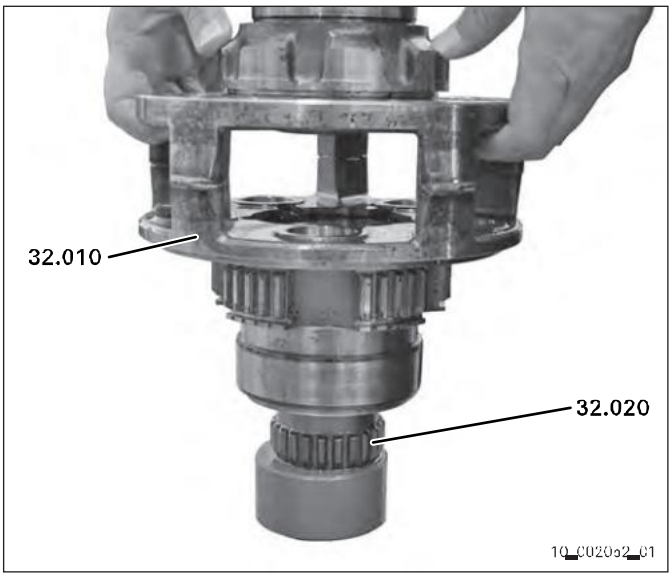

4 If required, hold sun gear's thrust washer up. Insert the pre-assembled planet gears **32.050** into the planet carrier **32.010**.

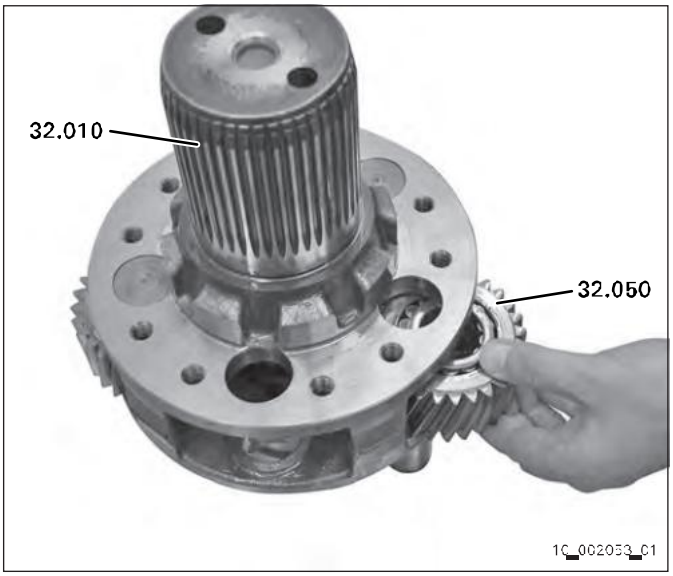

5 Center the planet gears **32.050** and insert planetary bolts **32.060** from below.

6 Rotate planet carrier by 180°.

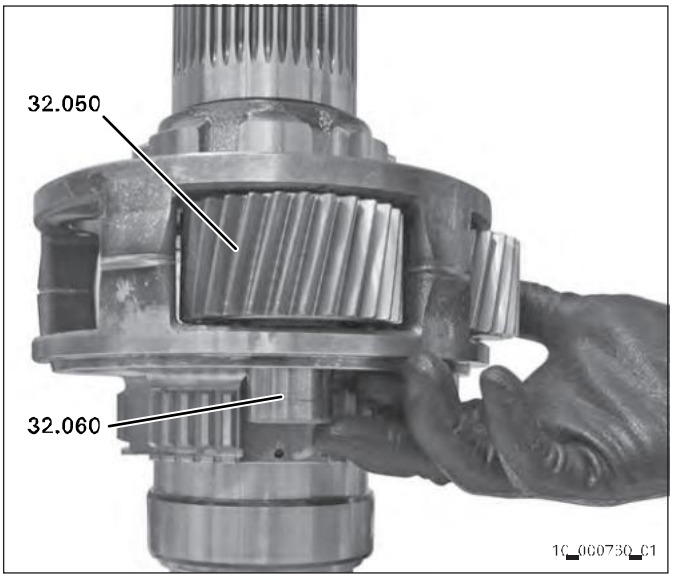

7 Use a plastic hammer to cautiously hammer in the planetary bolts **32.060** until they no longer protrude.

8 Insert securing ring **32.240** and contract using the fork **1X56.138.426**.

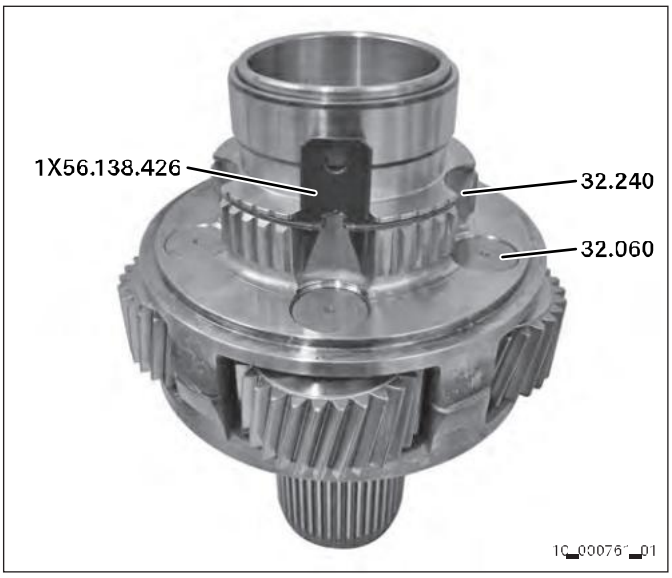

9 Place clutch body **32.250** on the planet carrier. The securing ring **32.240** snaps into the groove of the clutch body **32.250**.

10 Remove fork **1X56.138.426**.

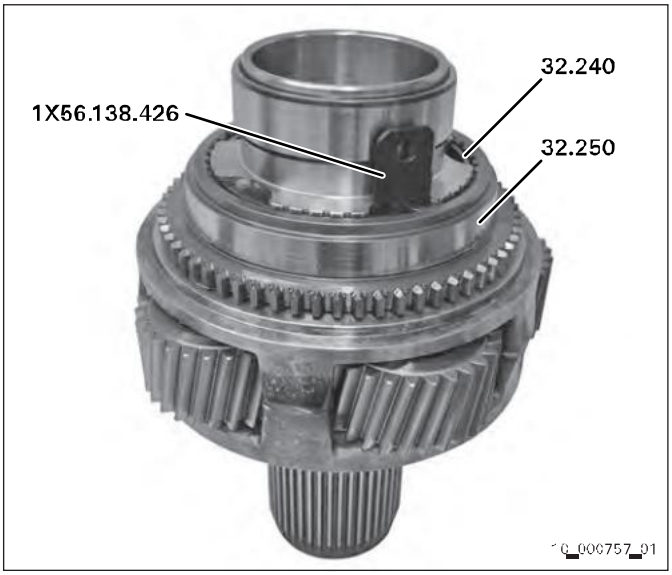

11 Insert locking wire **32.222** into the ring gear **32.200**.
Insert locking wire **32.222** on the side of the gearing that was not subject to a turning process.

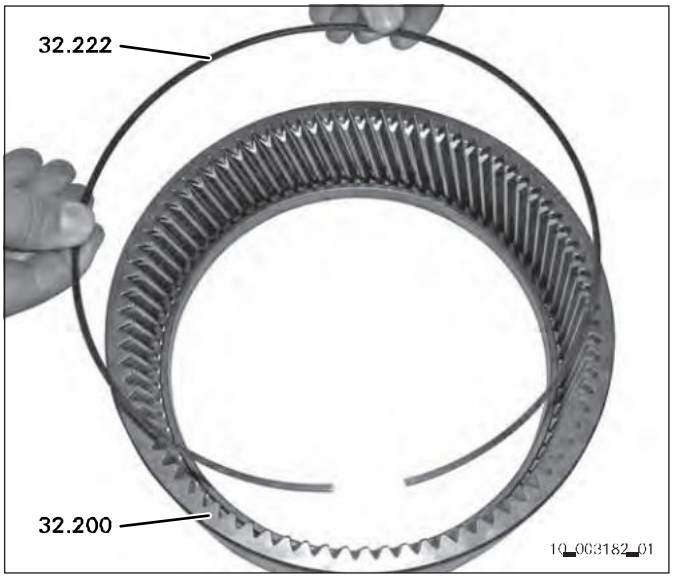

12 Rotate ring gear by 180°.
Insert thrust ring **32.210/020** into the ring gear **32.200** with the collar facing downwards until firmly home on the locking wire **32.222**.

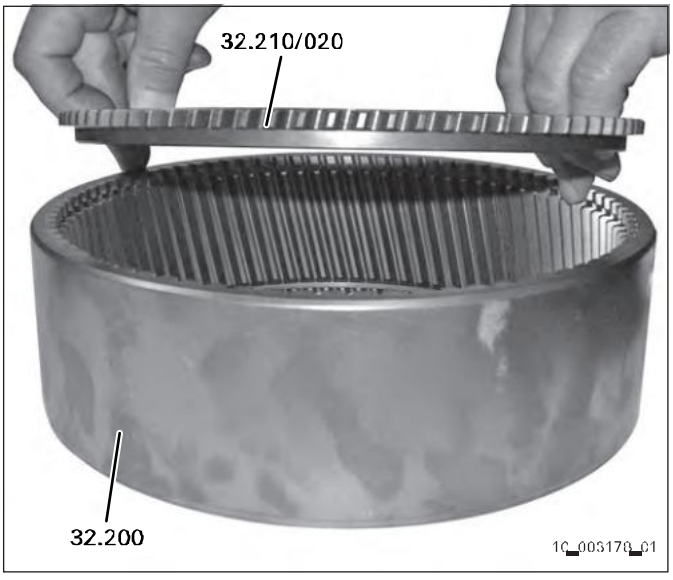

13 Slide the ring gear **32.200** (output-end) and the ring gear carrier **32.210/010** (input-end) onto the planet carrier.

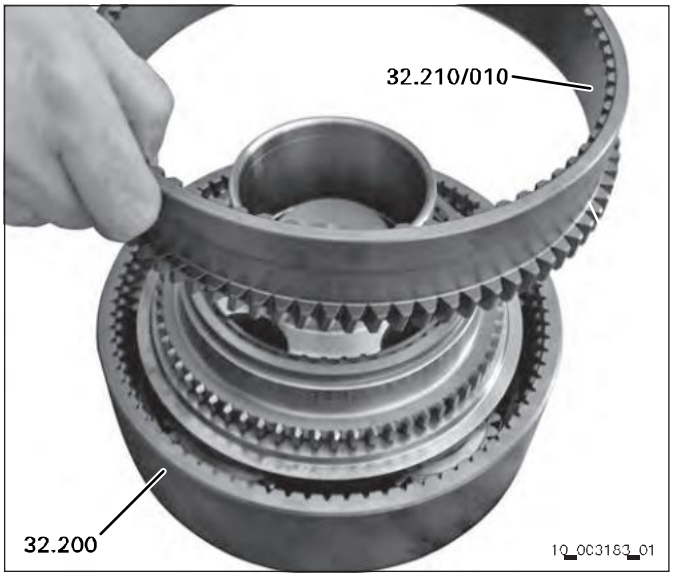

14 Insert locking wire **32.212** into groove of ring gear.
Locking wire **32.212** must make contact with the ring gear's groove base.

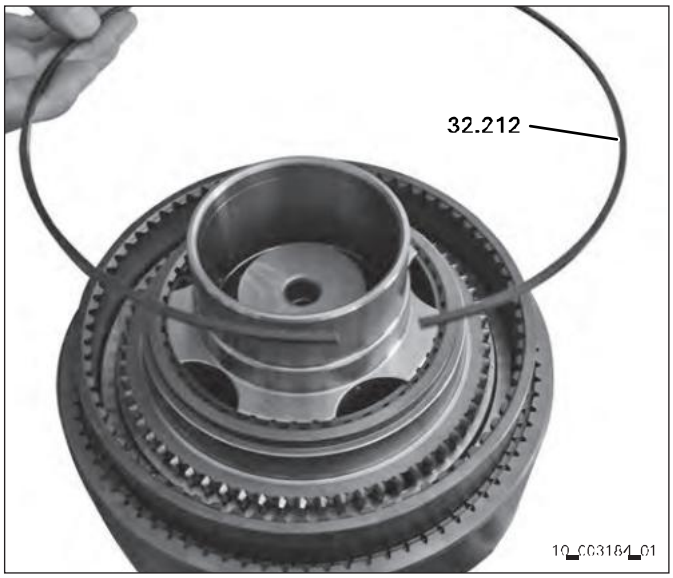

15 Rotate planet carrier by 180°.



Observe the following:

- On transmissions **without** INTARDER, install counting disk.
- On transmissions **with** INTARDER, the counting disk is replaced by the step-up gear.

16 Installing the counting disk:
Place counting disk **72.010** on the planet carrier.

17 Secure counting disk **72.010** with five M12 cap screws **(2)**.
Tightening torque: **65 Nm**

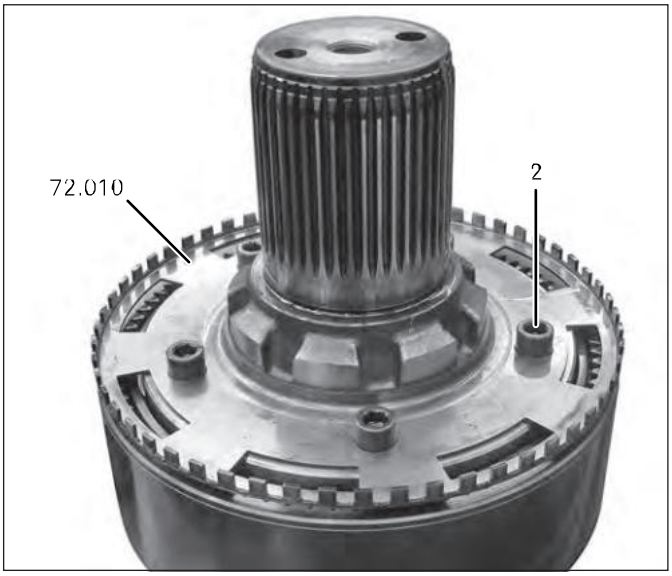

03a628_1

18 Fit step-up gear for transmissions with INTARDER.

⚠ CAUTION

Risk of burns due to contact with hot surfaces.
Slight to moderate injury possible.
⇨ Wear protective gloves.

Heat up step-up gear **72.010** to approx. 100°C and place on planet carrier.

19 Secure step-up gear **72.010** with ten M12 cap screws **(1)**.
Tightening torque: **135 Nm**

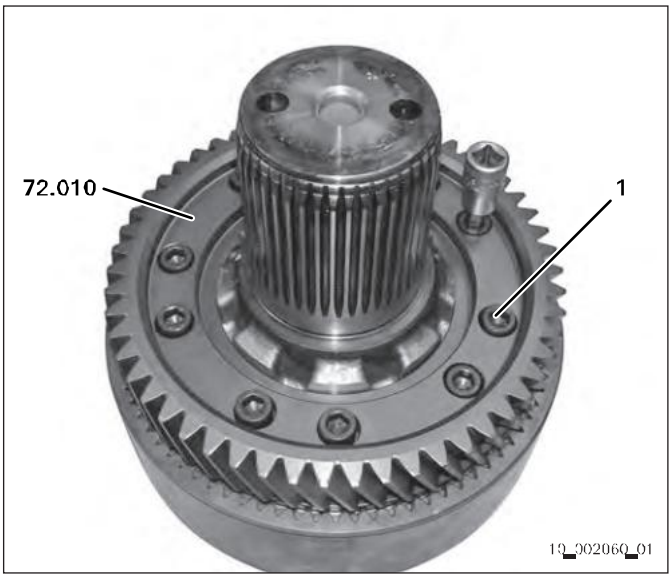

19_002060_01

Assembling the transmission housing

1 Clean solenoid on the screw plug **31.150** for the oil drain.

2 Replace sealing rings on the screw plugs **31.150, 47.400, 47.410.**
Tightening torque for each M24x1.5 screw plug: **60 Nm**

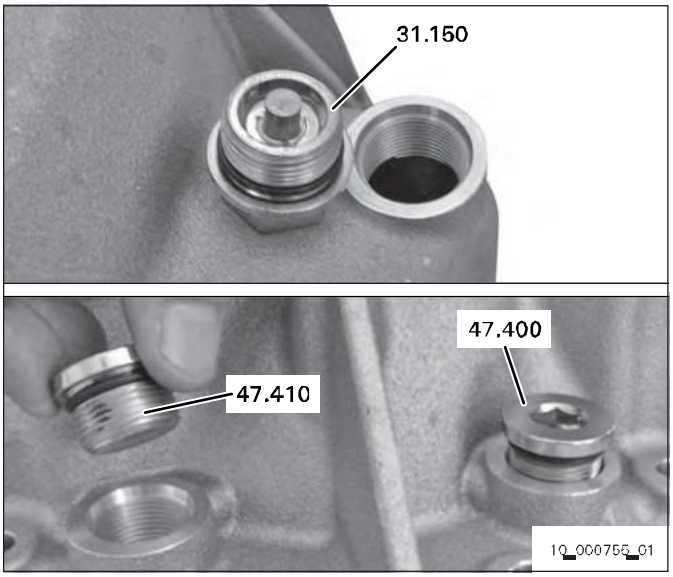

3

⚠ CAUTION

Risk of burns due to contact with hot surfaces.
Slight to moderate injury possible.
⇨ Wear protective gloves.

Heat transmission housing in the area of the bearing seat.

4 Insert ball bearing **32.260** into transmission housing.

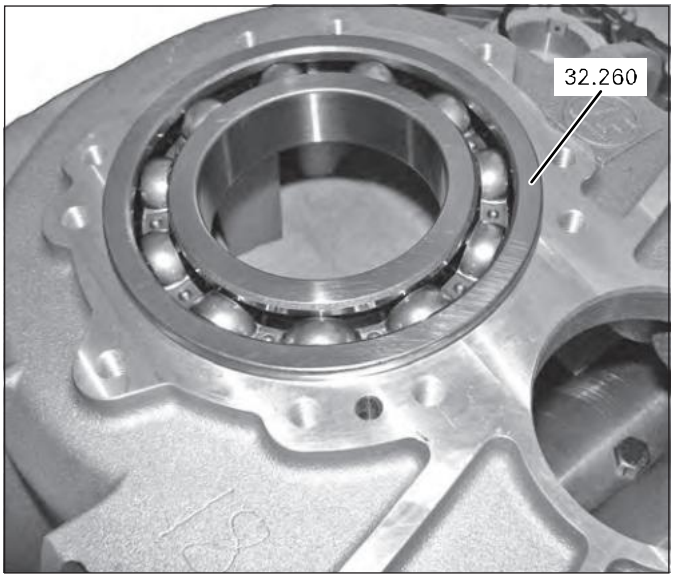

5 Secure ball bearing with two clamping bars **1X56.104.910**.

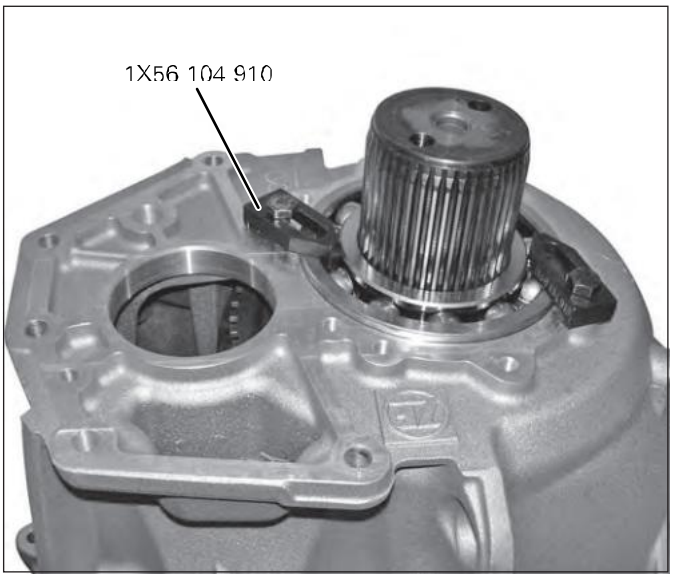

6

⚠ CAUTION

Risk of burns due to contact with hot surfaces.
Slight to moderate injury possible.
⇨ Wear protective gloves.

Heat the ball bearing's inner ring to max. 120°C.

Version: Basic transmission

7 Place transmission housing onto planet carrier, ensuring axial abutment of the ball bearing on the planet carrier.

8 Remove clamping bars **1X56.104.910**, install output cover and output flange *(refer to Chapter Output Cover and/or Output Flange)*.

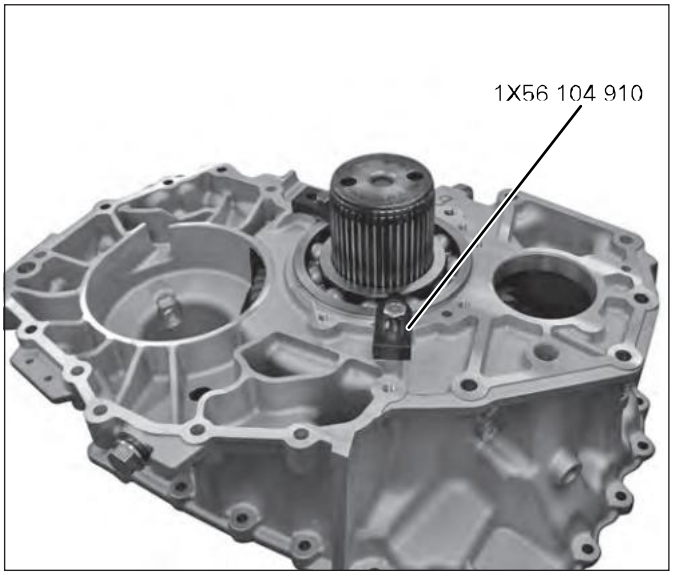

Version: Transmission with RETARDER 03a624

Measuring the range change group

Clearance setting main shaft - sun gear

Observe the following:

- Attach bearing support and clutch housing to assembly fixture **1X56.138.729**. To obtain correct measurement values, screw in and tighten all screws.

1 Requirements for measuring the shim:
Snap securing ring into sleeve and place onto main shaft.

2 Install the measuring plane.

3 **Dimension B2:** Measure from the measuring plane to the sealing face of the bearing support using a digital measuring slide. In this position, set the digital display on the measuring slide to **zero**.

4 **Dimension B1:** Use the digital measuring slide to measure from the measuring plane to the securing ring. Read off the measurement value on the digital display, e. g., **1.85 mm**.

5 The thickness of the seal must be measured without taking the seam/crimp into account. Seal thickness, e. g., **0.35 mm**.

6 **Dimension B:** Determine the distance from the securing ring to the sealing face of the bearing support.

Exemplary calculation:
B = B2 + B1 + seal
B = 0 mm + 1.85 mm + 0.35 mm
B = 2.20 mm

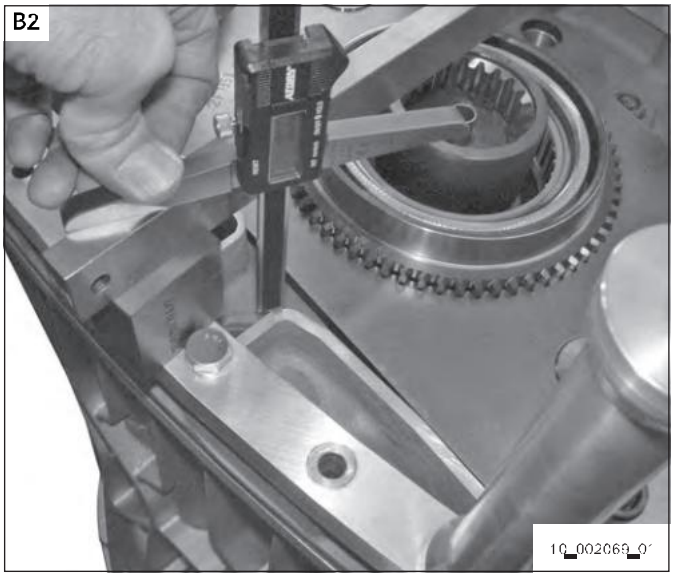

Measure dimension B2

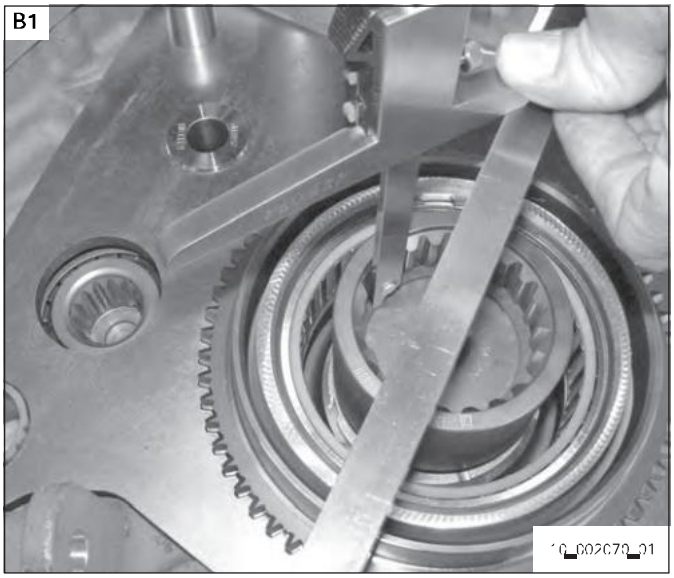

Measure dimension B1

7 **Dimension A1**: Measure from the measuring plane to the sealing face of the transmission housing. In this position, set the digital display on the measuring slide to **zero**.

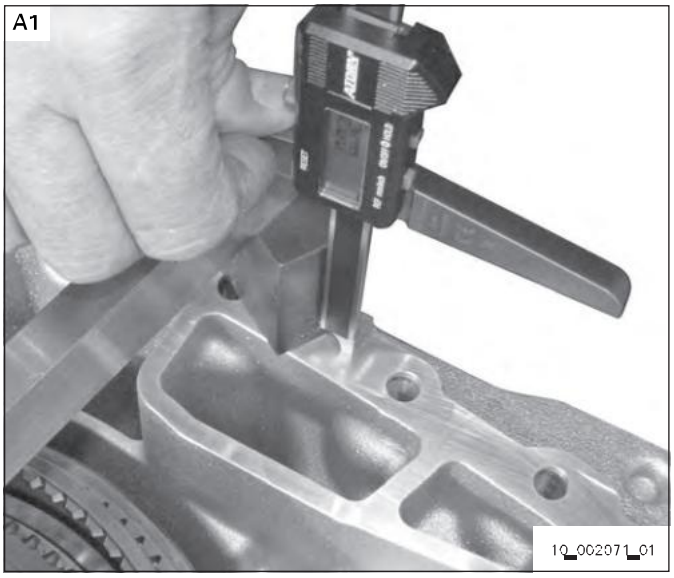

Measure dimension A1

8 **Dimension A2**: Use the digital measuring slide to measure from the measuring plane to the sun gear. Read off the measurement value on the digital display, e. g., **2.90 mm**

A clearance of **2 $^{\pm 0.1}$ mm between sun gear and main shaft must be considered** mandatory.

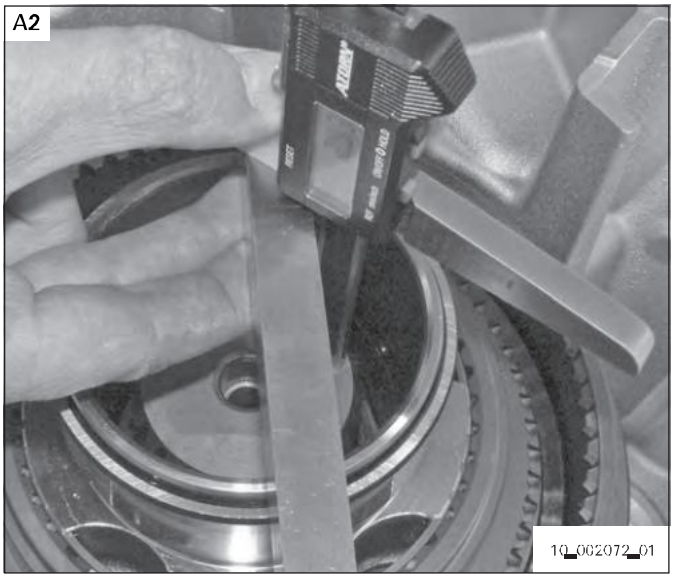

Measure dimension A2

9 **Dimension A**: Determine the distance from the sun gear to the sealing face of the transmission housing.

Exemplary calculation:

A	**=**	**A1**	**+ A2**
A	=	0 mm	+ 2.9 mm
A	=	**2.90 mm**	

10 Calculate **thickness (S)** of shim.
S = A + B − clearance

Exemplary calculation:

S	**=**	**A**	**+ B** **− clearance**
S =		2.90 mm	+ 2.20 mm − 2.00 mm
S =		**3.10 mm**	

11 Select shim with the determined **thickness (S)** using the spare parts catalog.

Fitting the transmission housing

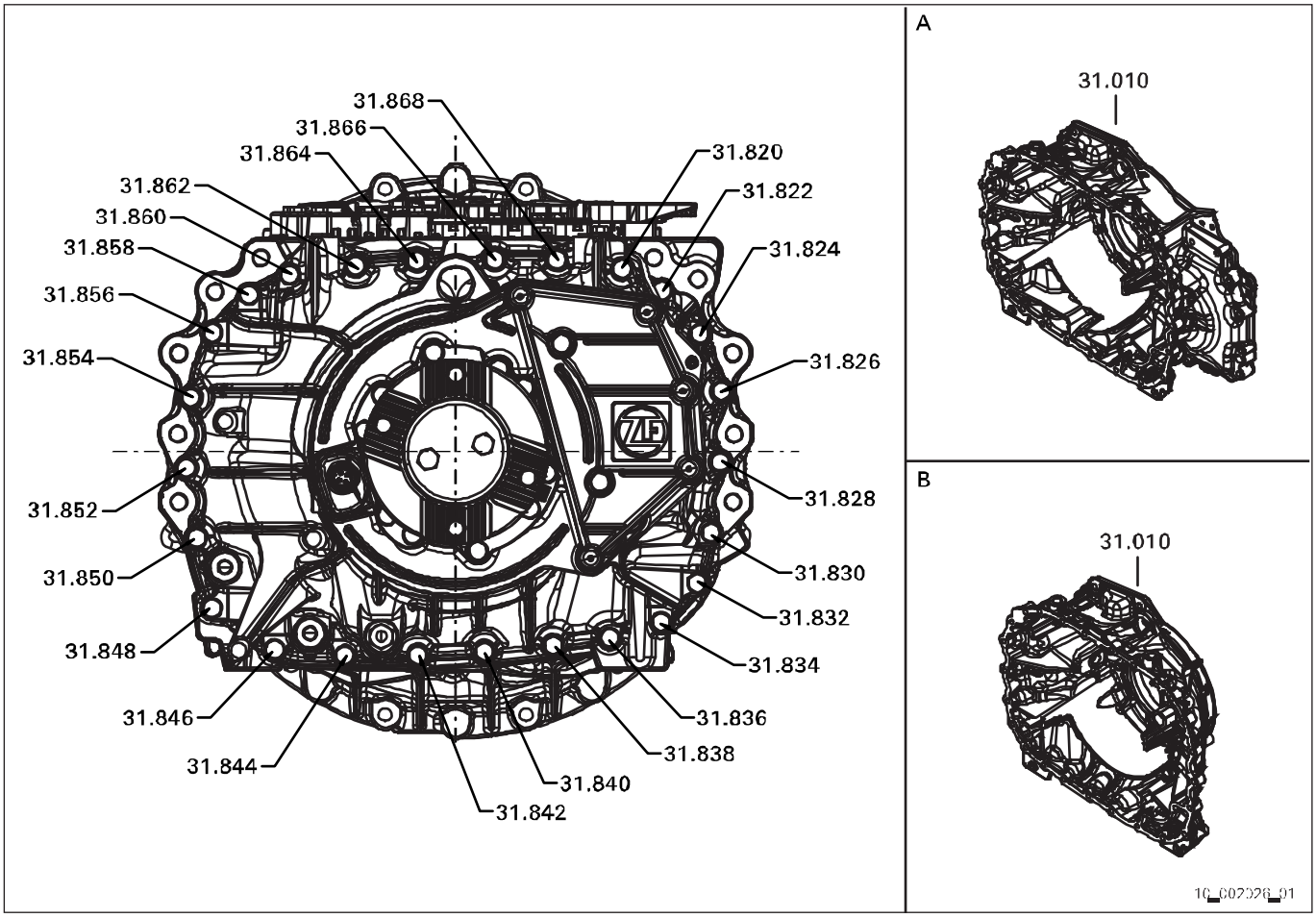

31.010	Transmission housing	31.844	Hexagon screw (1)
31.820	Hexagon screw (1)	31.846	Hexagon screw (1)
31.822	Hexagon screw (1)	31.848	Hexagon screw (1)
31.824	Hexagon screw (1)	31.850	Hexagon screw (1)
31.826	Hexagon screw (1)	31.852	Hexagon screw (1)
31.828	Hexagon screw (1)	31.854	Hexagon screw (1)
31.830	Hexagon screw (1)	31.856	Hexagon screw (1)
31.832	Hexagon screw (1)	31.858	Hexagon screw (1)
31.834	Hexagon screw (1)	31.860	Hexagon screw (1)
31.836	Hexagon screw (1)	31.862	Hexagon screw (1)
31.838	Hexagon screw (1)	31.864	Hexagon screw (1)
31.840	Hexagon screw (1)	31.866	Hexagon screw (1)
31.842	Hexagon screw (1)	31.868	Hexagon screw (1)

A: Version with INTARDER

B: Version without INTARDER

Version: Transmission without INTARDER

1 Secure lifting device **1T66.153.417** to the output flange or lifting device **1X56.136.260** to the planet carrier.

2 Screw in two M10 guide pins **(3)**.

For centering the flat seal **31.800**, insert the hexagon screws on the transmission housing.

NOTICE

Damage due to housing failure.

⇨ Carefully place transmission housing over the cylindrical pins **(2)** on the basic transmission.

3 Use a hoist to carefully place the transmission housing onto the basic transmission, while paying attention to the two cylindrical pins **(2)**.
Use an auxiliary tool **(4)**, e.g., a dowel pin, to insert the injector tube **10.010** into the bore of the transmission housing.

4 Remove lifting device. In case of using the lifting device **1X56.136.260**, install O-ring and washer on the output flange (refer to Chapter Output Flange).

5 Remove the M10 guide pins **(3)**.

6 Screw in 25 M10 hexagon screws **(1)** on the transmission housing **31.010**.
M10 tightening torque: **55 Nm**

Observe the following:

- Turns may fray if too short screws are used. Only components released by ZF shall be attached to the screw connection.

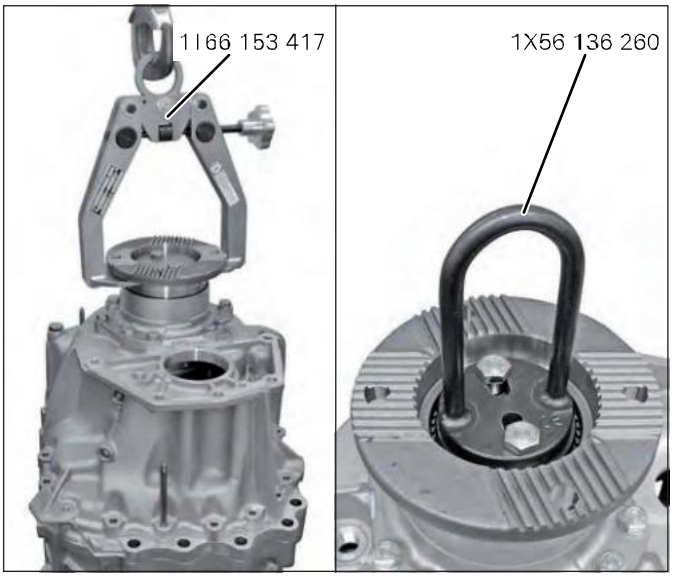

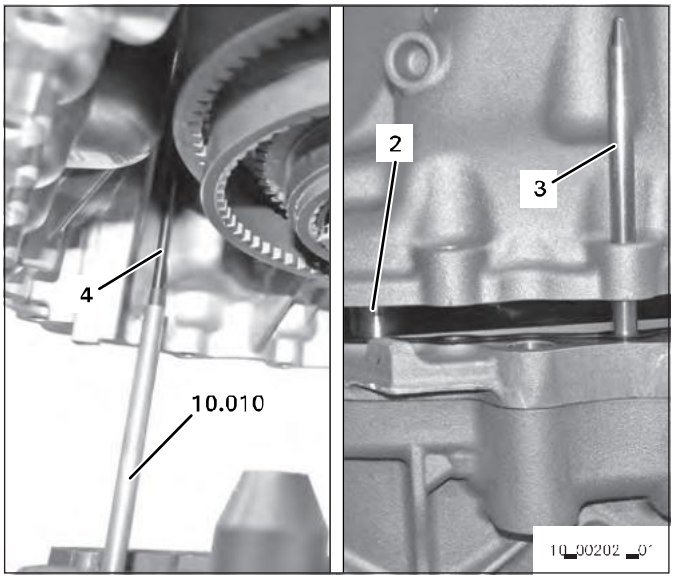

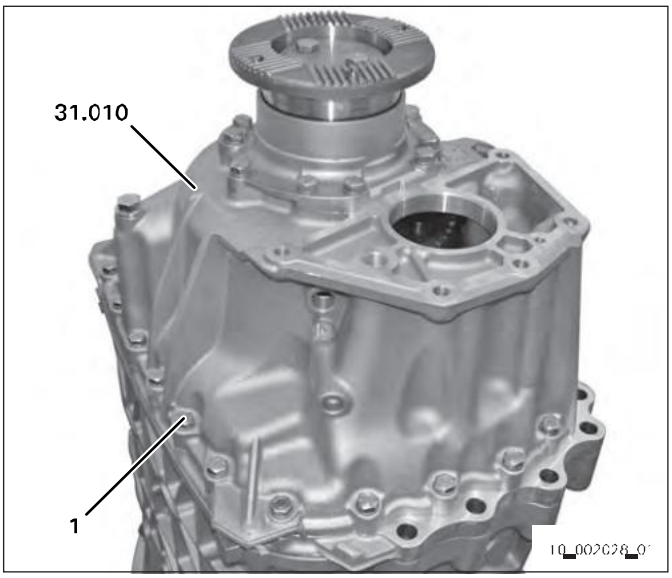

Version: Transmission with INTARDER

1 Attach lifting device **1X56.136.260** to the planet carrier.

2 Screw in two M10 guide pins **(3)**.

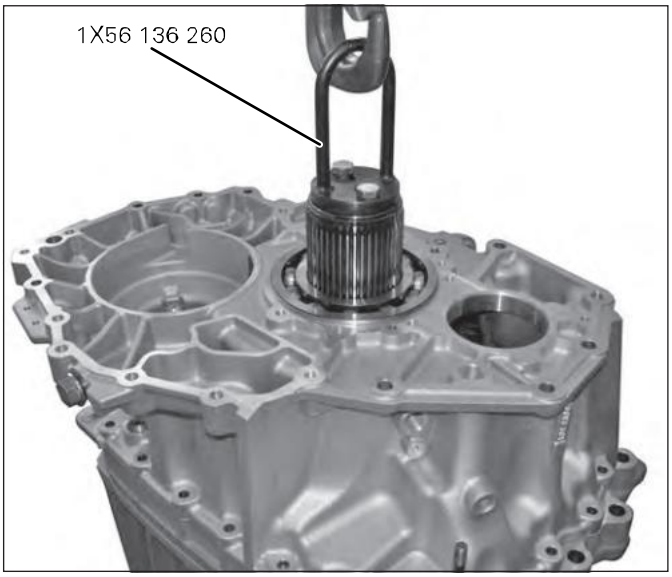

03a869_1

For centering the flat seal **31.800**, insert the hexagon screws on the transmission housing.

3

NOTICE

Damage due to housing failure.

⇨ Carefully place transmission housing over the cylindrical pins **(2)** on the basic transmission.

Use a hoist to carefully place the transmission housing onto the basic transmission, while paying attention to the two cylindrical pins **(2)**.
Use an auxiliary tool **(4)**, e.g., a dowel pin, to insert the injector tube **10.010** into the bore of the transmission housing.

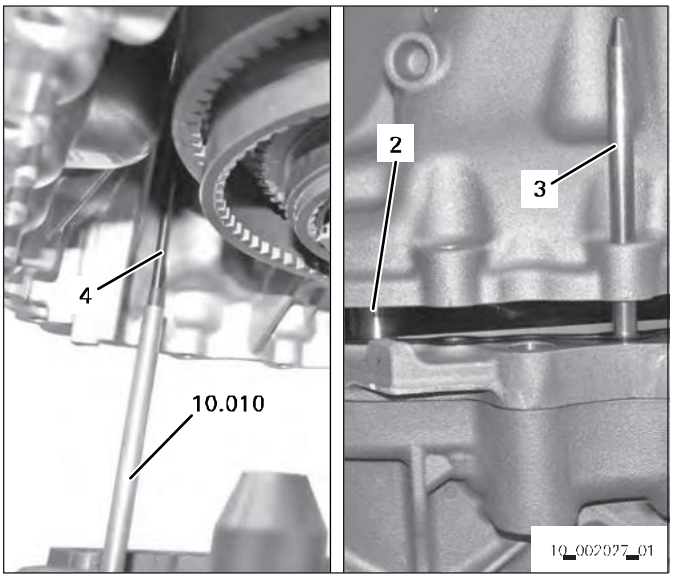

4 Remove lifting device **1X56.136.260**.

5 Remove the M10 guide pins **(3)**.

6 Screw in 25 M10 hexagon screws **(1)**. M10 tightening torque: **55 Nm**

Observe the following:

- Turns may fray if too short screws are used. Only components released by ZF shall be attached to the screw connection.

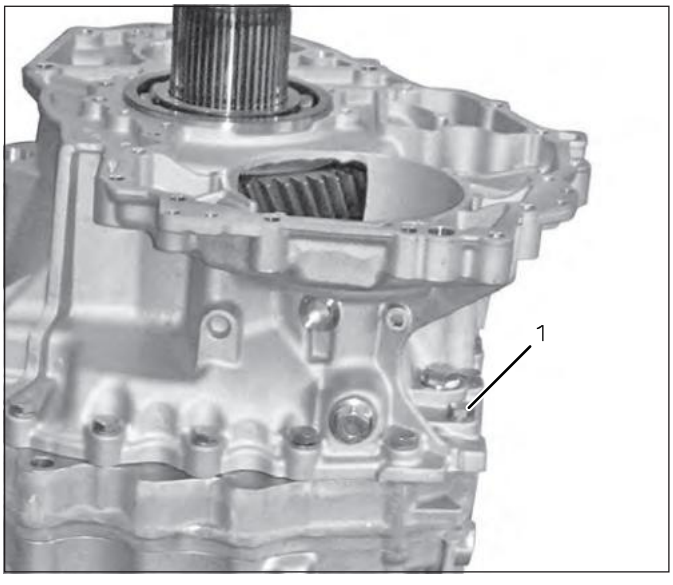

03a866_2

Installing the INTARDER

For additional information, refer to repair instructions 6093.751.001 INTARDER, 3rd generation.

1 Clean contact surface on the Intarder housing and the transmission housing.

2 Place new seal on transmission housing.

3 Assemble washer and input gear.

The input gear and the washer are only assembled together with a steering pump.

4 Use a hoist to place the pre-assembled INTARDER on the transmission housing.

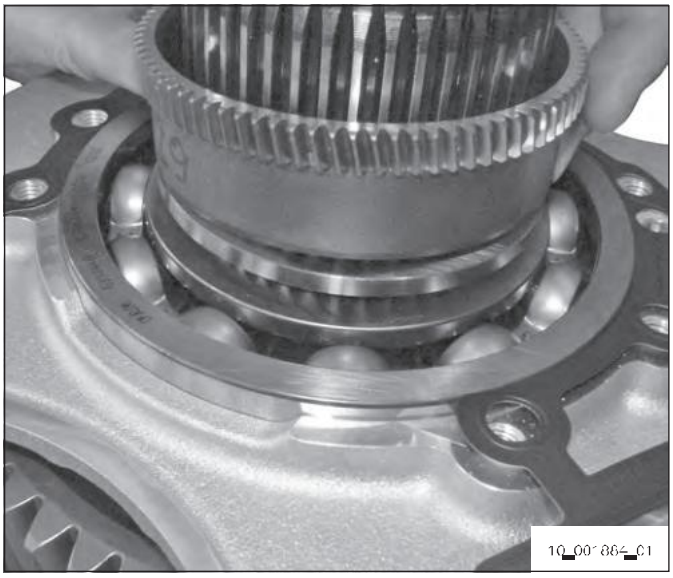

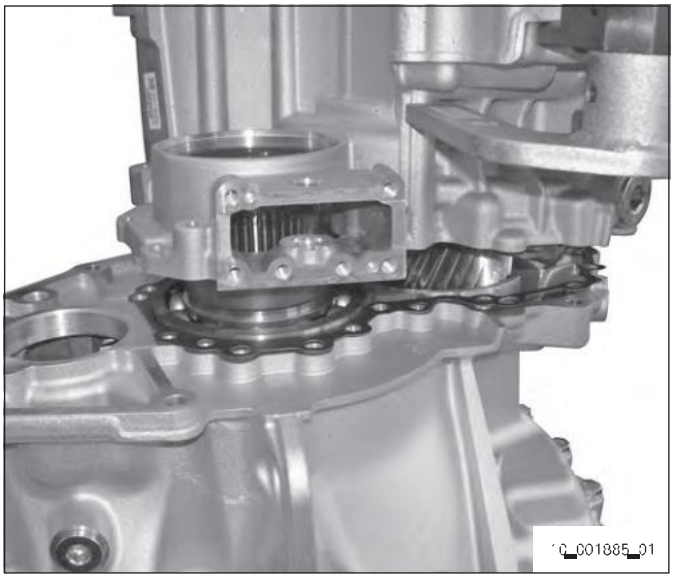

Only screw in speedometer after having installed the INTARDER, otherwise the speedometer might be damaged.

5

NOTICE

Damage due to housing failure possible.

⇨ Carefully drive in cylindrical pin.

The cylindrical pin's thread faces the output.

Drive in cylindrical pin **(600)**.

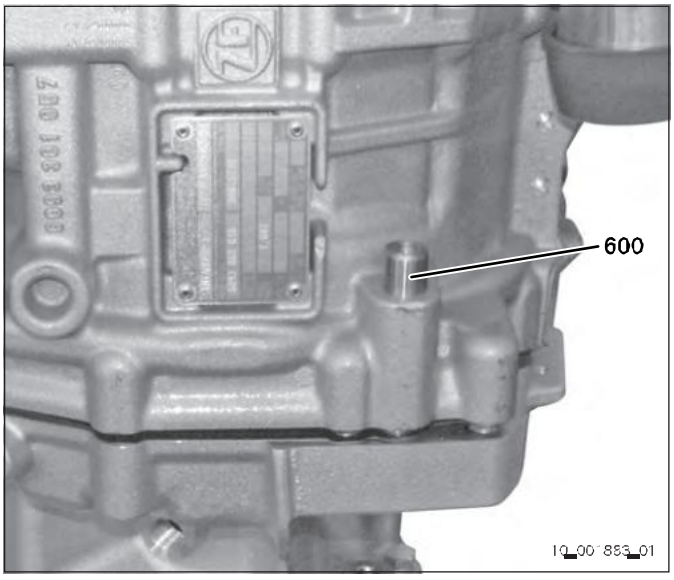

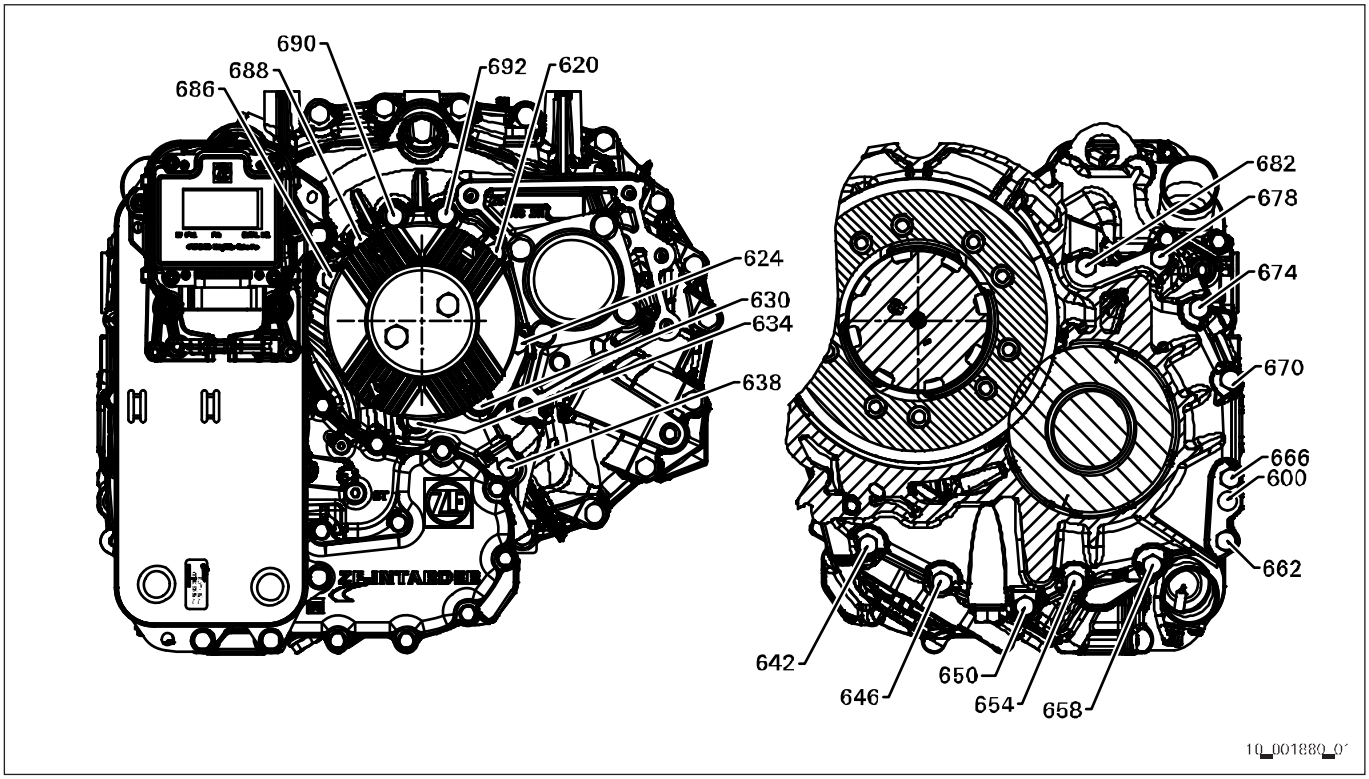

600	Cylindrical pin
620	Hexagon screw **(1)**
624	Hexagon screw **(1)**
630	Hexagon screw **(2)**
634	Hexagon screw **(2)**
638	Hexagon screw **(2)**
642	Hexagon screw **(2)**
646	Hexagon screw **(2)**
650	Hexagon screw **(2)**
654	Hexagon screw **(2)**
658	Hexagon screw **(2)**
662	Hexagon screw **(2)**
666	Hexagon screw **(2)**
670	Hexagon screw **(2)**
674	Hexagon screw **(2)**
678	Hexagon screw **(2)**
682	Hexagon screw **(2)**
686	Hexagon screw **(2)**
688	Hexagon screw **(2)**
690	Hexagon screw **(2)**
692	Hexagon screw **(2)**

6 Attach INTARDER to R/C housing using 20 hexagon screws **(1, 2)**.
M10 tightening torque: **54 Nm** ±5%

M10x40 hexagon screw **(1)**
M10x60 hexagon screw **(2)**

Fitting the steering pump

Retrofitting the steering pump is only possible on the non-Intarder version. The retrofitting process is described in the PTO documentation.

1 Clean the sealing face.

2 Drive in two cylindrical pins.

3 Screw in two studs.
Tightening torque: **10 Nm**

4 Fit new seal **(7)**.

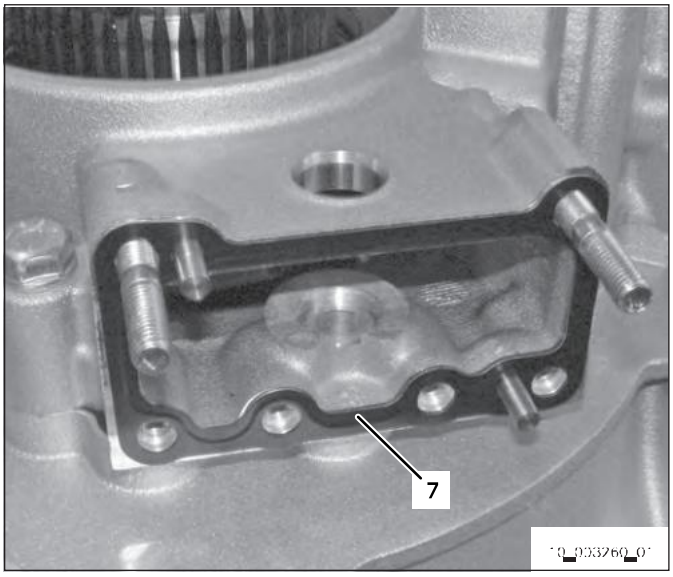

5 Insert O-ring **(5)** into shaft **(4)** and apply light coating of grease.

6 Position gear in the Intarder housing and insert shaft **(4)**.

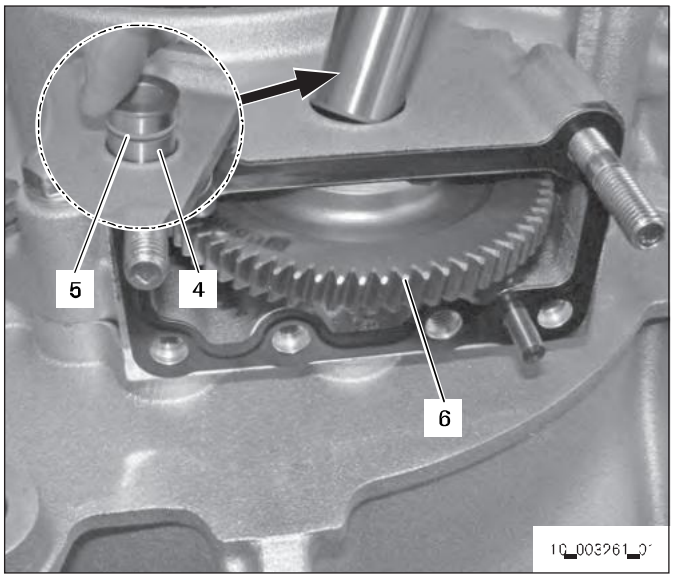

7 Use a plastic hammer to hammer the shaft **(4)** in until it no longer protrudes.

8 Secure pump housing **(2)** with two hexagon nuts and four screws.

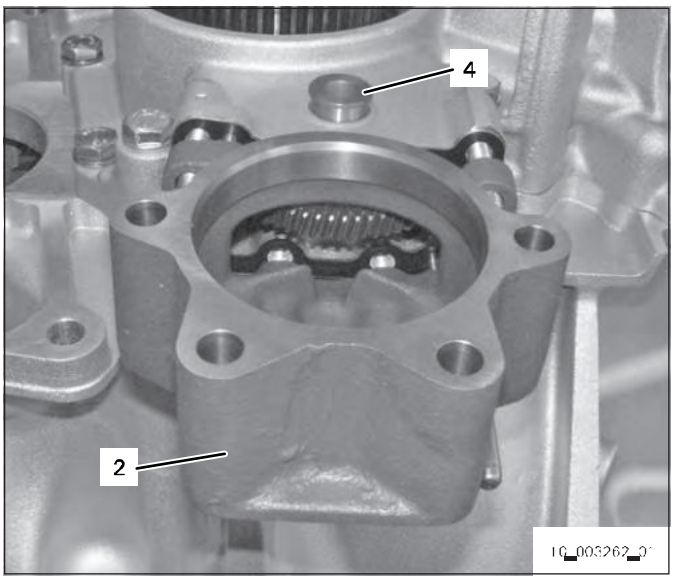

9 Insert new O-ring **(3)** on the steering pump **(1)** and apply light coating of grease.

10 Insert steering pump in the pump housing **(2)** and secure with two screws.



Installing the adapter plate

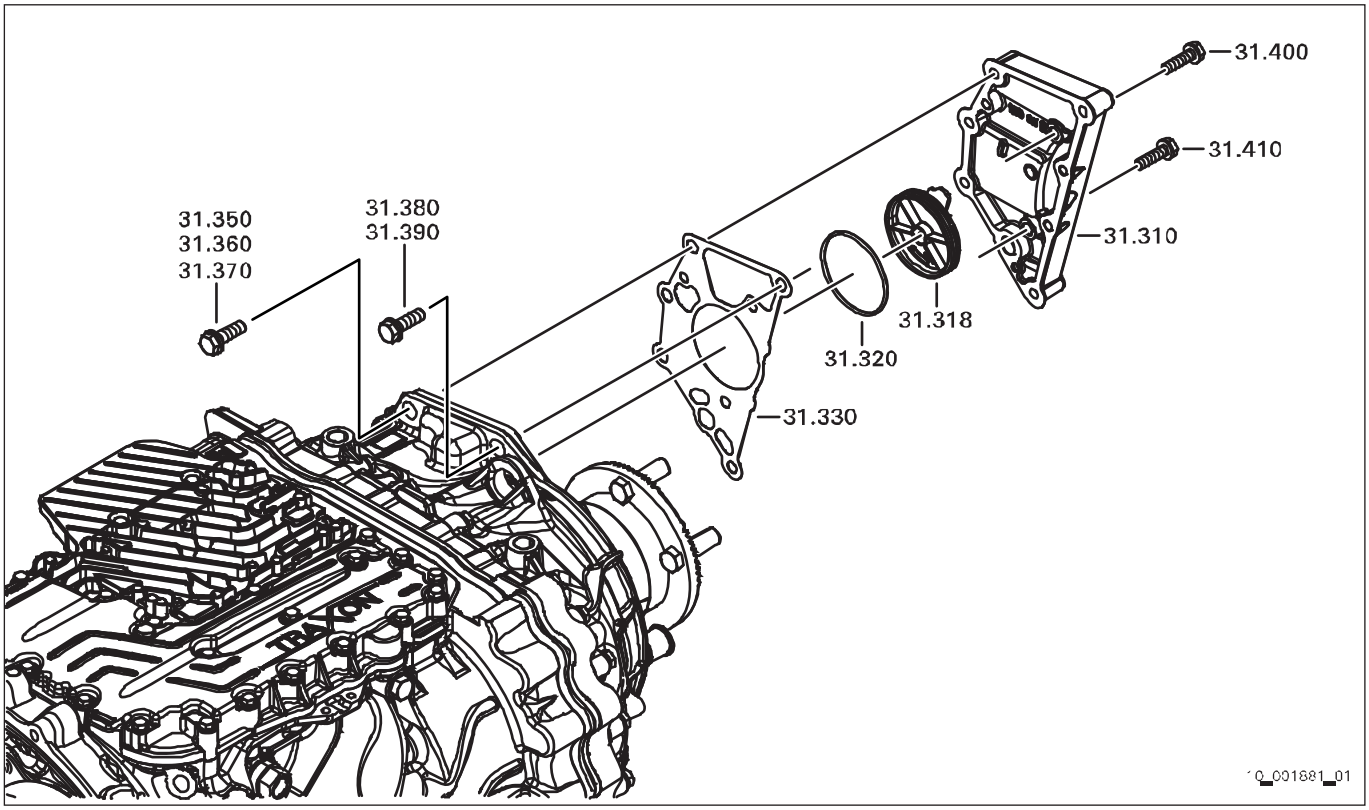

31.310 Cover [adapter plate]
31.318 Plug
31.320 O-ring
31.330 Flat seal
31.350 Screw with washer assembly **(1)**
31.360 Screw with washer assembly **(1)**
31.370 Screw with washer assembly **(1)**
31.380 Screw with washer assembly **(1)**
31.390 Screw with washer assembly **(1)**
31.400 Hexagon screw **(2)**
31.410 Hexagon screw **(2)**

1 Place new flat seal **31.330** on transmission housing.

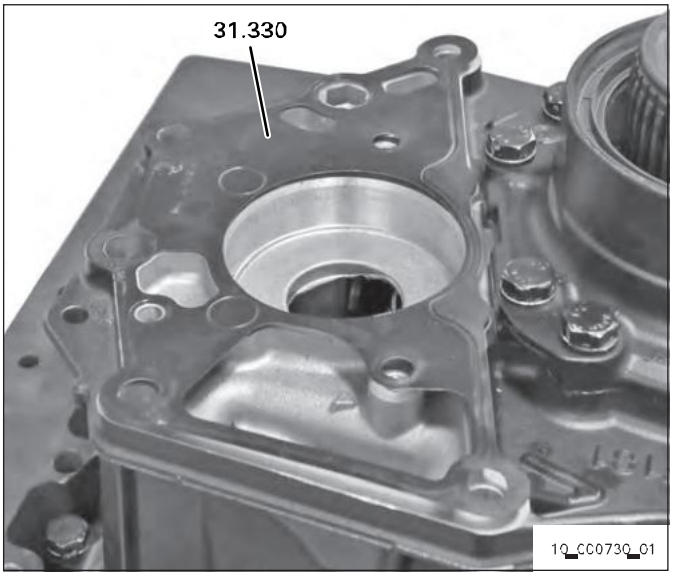

2 Lightly grease new O-ring **31.320** and insert in plug **31.318**.

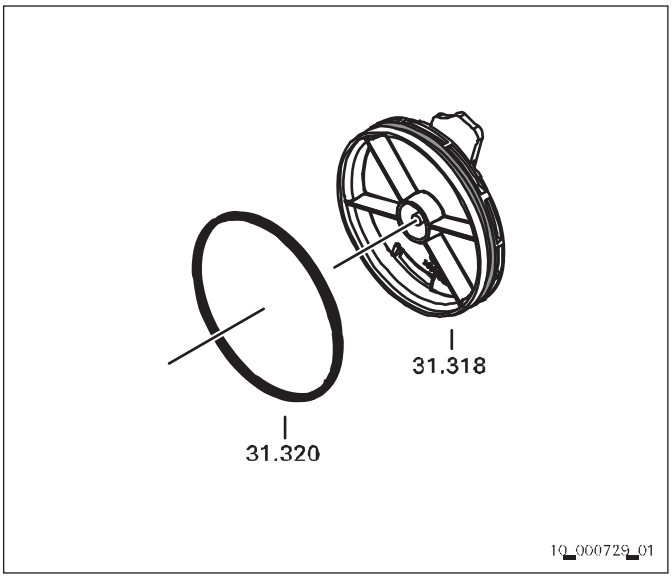

3 Lightly grease bore and insert plug **31.318**. Make sure that the arrows at the transmission housing and plug face each other.

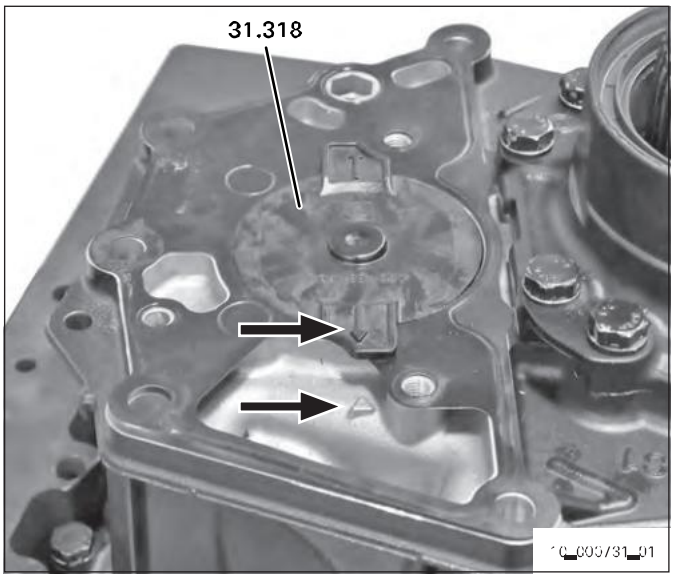

4 Put adapter plate **31.310** on transmission housing.

5 Screw in two M10 hexagon screws **(2)** by hand.

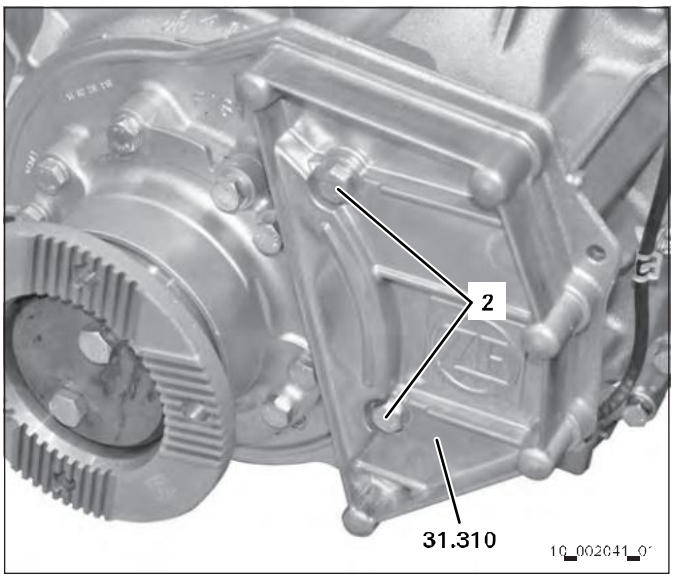

6 Screw five M12 screws with washer assembly **(1)** into the adapter plate.
Tightening torque: **79 Nm**

7 Now tighten the two M10 hexagon screws **(2)**.
Tightening torque: **46 Nm**

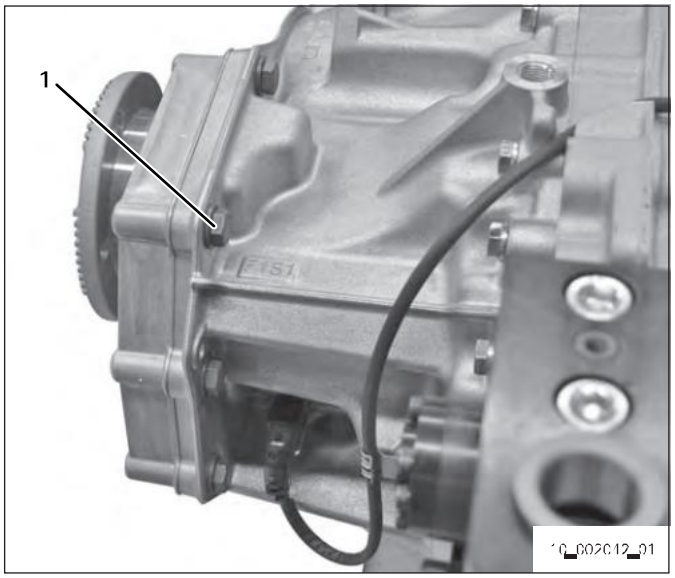

Removing the PTO cover

31.310 Adapter
31.430 Cover [PTO cover]
31.440 Seal
31.450 Hexagon screw **(1)**
31.460 Hexagon screw **(1)**
31.470 Hexagon screw **(1)**
31.480 Hexagon screw **(1)**

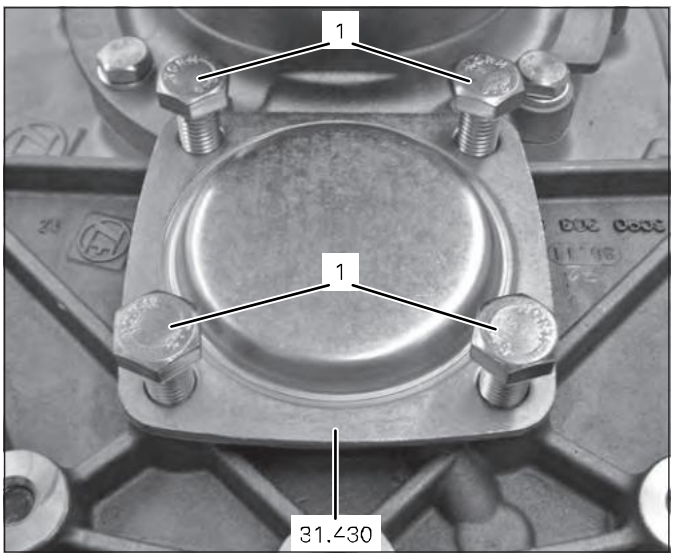

036026_1

1 Remove four M12 hexagon screws **(1)**.

2 Remove PTO cover **31.430** with seal **31.440**.

Installing the PTO cover

For the installation of a PTO, the respective separate installation instructions are binding.

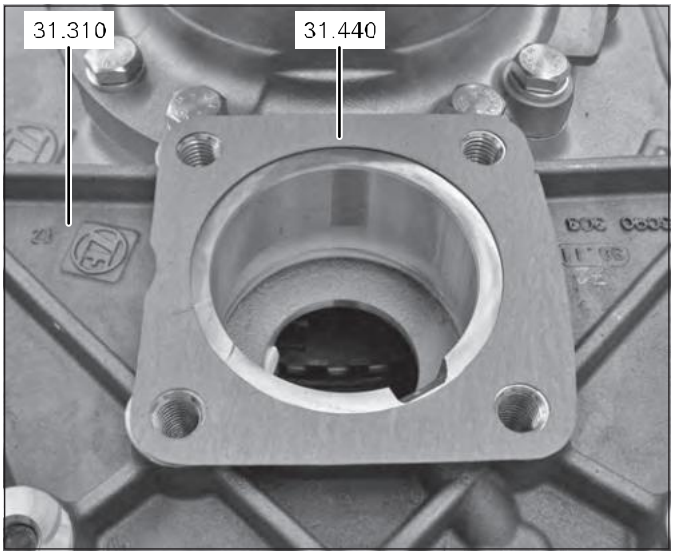

036026_1

1 Clean sealing faces on the adapter plate **31.310** and the PTO cover **31.430**.

2 Install PTO cover **31.430** with new seal **31.440**.

3 Secure PTO cover **31.430** with four M12 hexagon screws **(1)**.
M12 tightening torque: **79 Nm**

Fitting the output cover

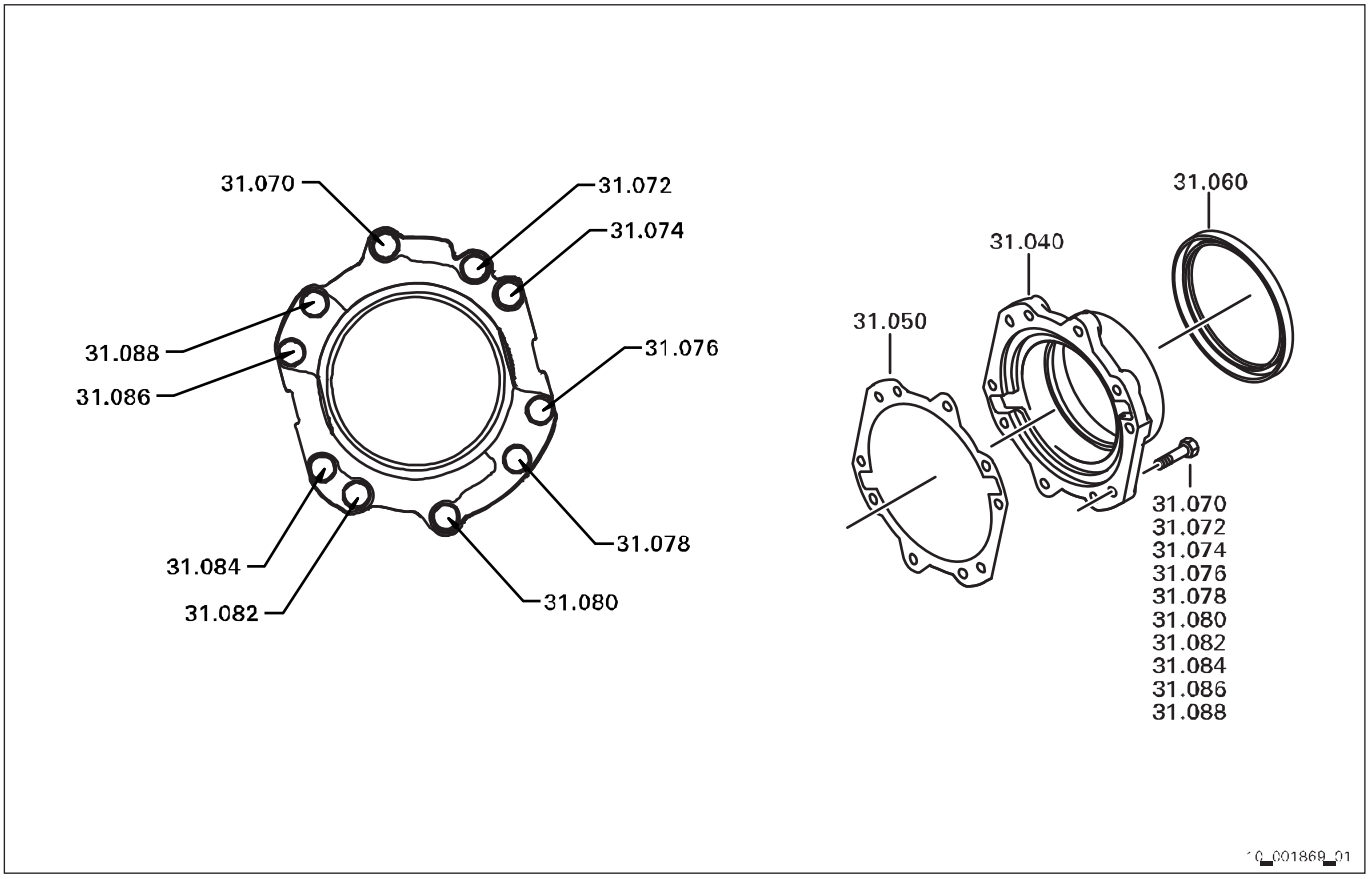

31.040 Cover **(2)** [output cover]
31.050 Seal **(4)**
31.060 Shaft sealing ring **(3)**
31.070 Hexagon screw **(1)**
31.072 Hexagon screw **(1)**
31.074 Hexagon screw **(1)**
31.076 Hexagon screw **(1)**
31.078 Hexagon screw **(1)**
31.080 Hexagon screw **(1)**
31.082 Hexagon screw **(1)**
31.084 Hexagon screw **(1)**
31.086 Hexagon screw **(1)**
31.088 Hexagon screw **(1)**

For the version with INTARDER, no output cover is used.

1 **Observe the following:**
- The sealing surfaces must be clean and free of oil and grease.

Clean sealing faces on the output cover and R/C housing.

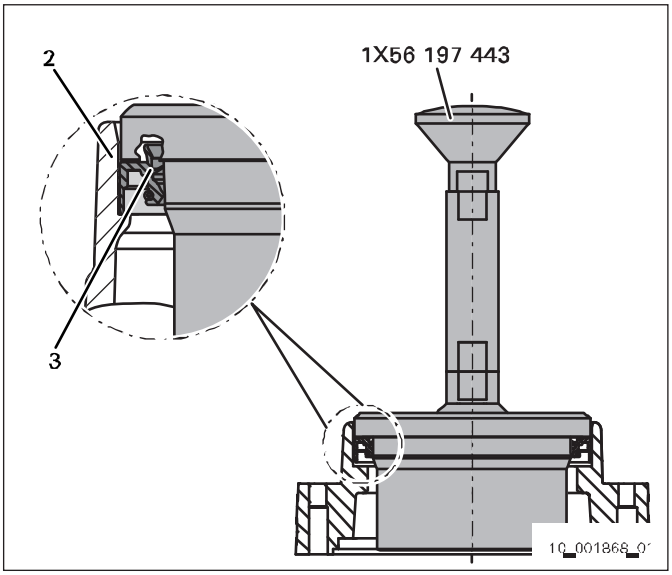

2 Coat the outer circumference of the shaft sealing ring **(3)** with spirit (ethanol) and press into the output cover **(2)** using a pressing punch **1X56.197.443**.
Alternatively to the pressing punch **1X56.197.443**, use the adapter **1X56.137.124** together with the adapter ring **1X56.138.740** to insert the shaft sealing ring into the output cover **(2)**.

3 Lightly grease the sealing lip of the shaft sealing ring.

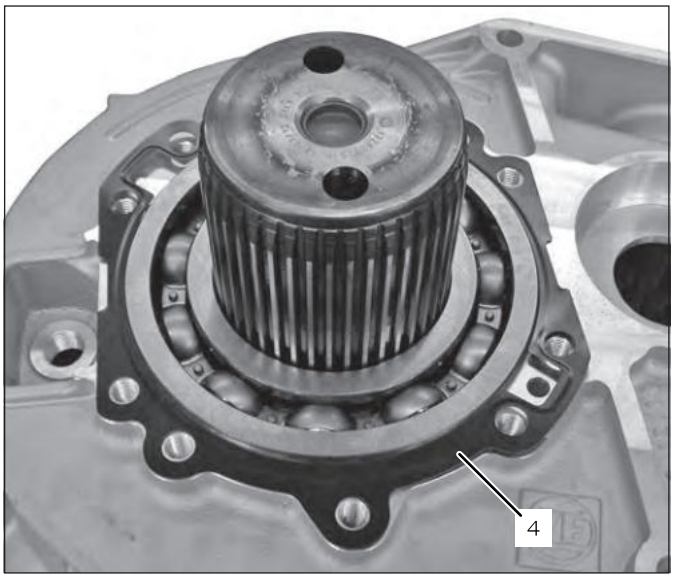

4 Fit new seal **(4)** and output cover.

5 Secure output cover **(2)** with ten M10 hexagon screws **(1)**.
M10 tightening torque: **46 Nm**

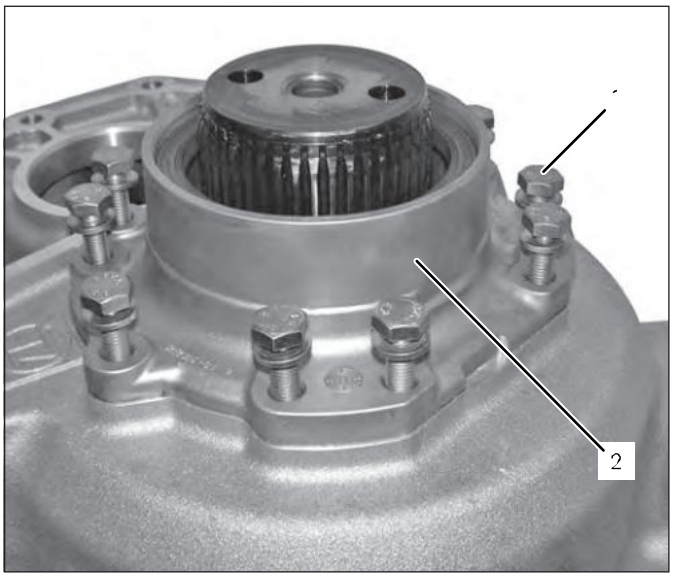

Installing the output flange

TRAXON without INTARDER

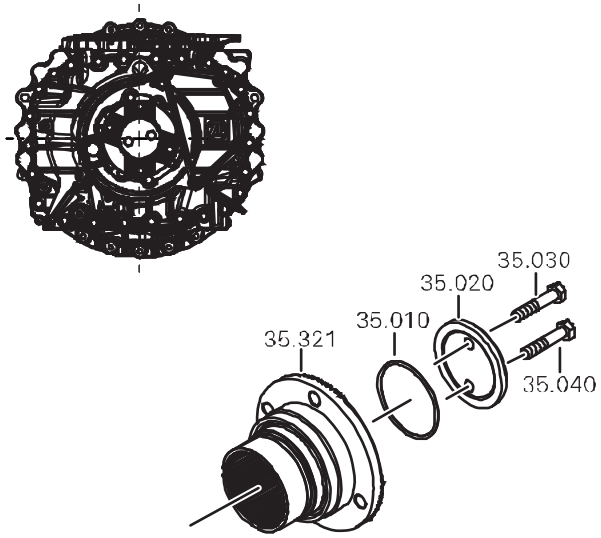

TRAXON with INTARDER

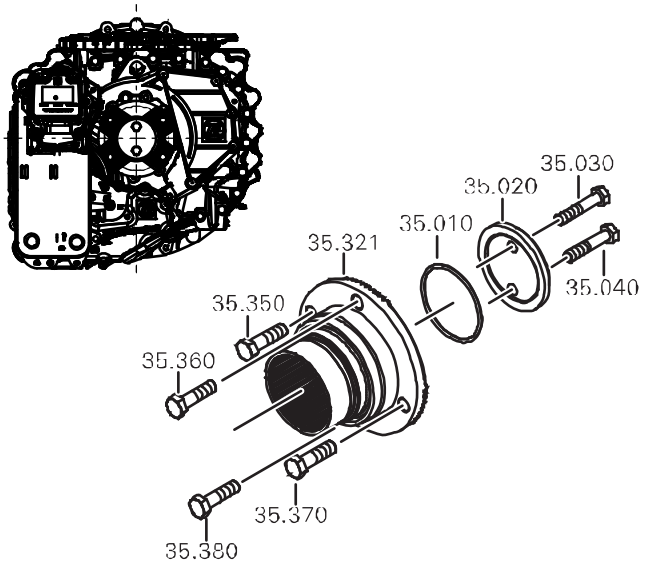

035455, 035464

TRAXON without INTARDER

35.010 O-ring (3)
35.020 Washer (2)
35.030 Hexagon screw (1)
35.040 Hexagon screw (1)
35.321 Output flange (4)

TRAXON with INTARDER

35.010 O-ring (3)
35.020 Washer (2)
35.030 Hexagon screw (1)
35.040 Hexagon screw (1)
35.321 Output flange (4)
35.350 Hexagon screw (5)
35.360 Hexagon screw (5)
35.370 Hexagon screw (5)
35.380 Hexagon screw (5)

1

⚠ CAUTION

Risk of burns due to contact with hot surfaces.
Slight to moderate injury possible.
⇨ Wear protective gloves.

Always wear protective gloves when handling heated output flange.

When dealing with the version with INTARDER, ensure that the hexagon screws **(5)** have been inserted in the output flange. Secure with protective covers **(6)**, if required.

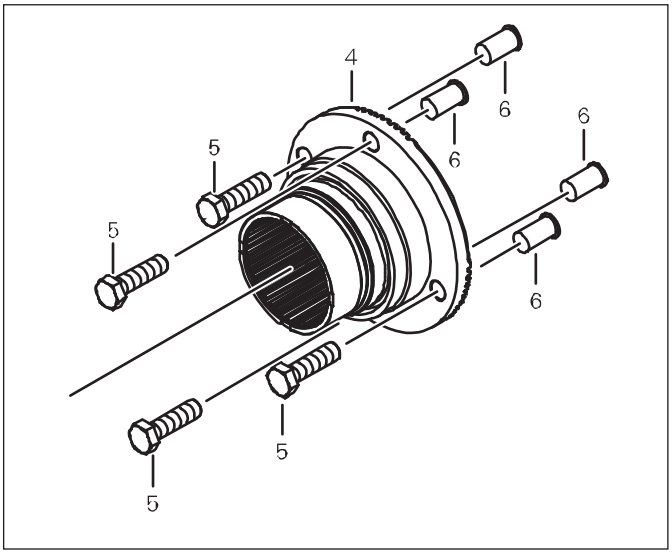

TRAXON with INTARDER 0355 1

Heat up the output flange **(4)** to max. 70°C. Wear protective gloves to slide output flange **(4)** onto gearing of planet carrier until firmly home.

2 Once the output flange has cooled down, press the O-ring **(3)** into the groove between the shaft and the output flange. Avoid damage to the O-ring.

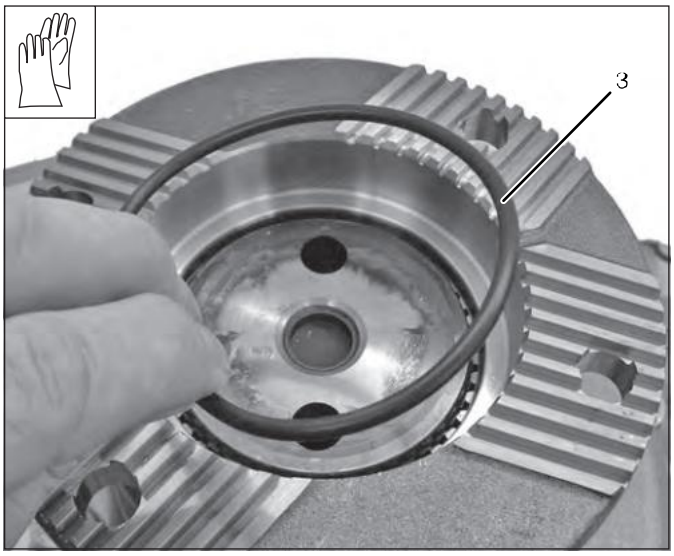

03ec07_1

3 Secure the washer **(2)** with two M12 hexagon screws **(1)**.
M12 tightening torque: **120 Nm**

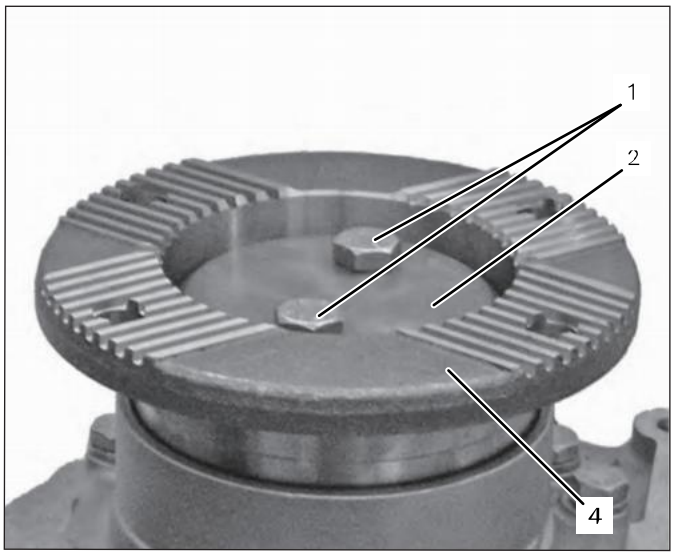

035306_1

Impulse sensor for speedometer

Removing the impulse sensor

1 Unscrew the impulse sensor **31.341**.

Installing the impulse sensor

1 Depending on parts list [BoM]*
- Screw in impulse sensor **31.341** without using Loctite. Tightening torque: **45 Nm**

or
- Screw in screw plug with new sealing ring. Tightening torque: **35 Nm**

* Optional, impulse sensor or screw plug

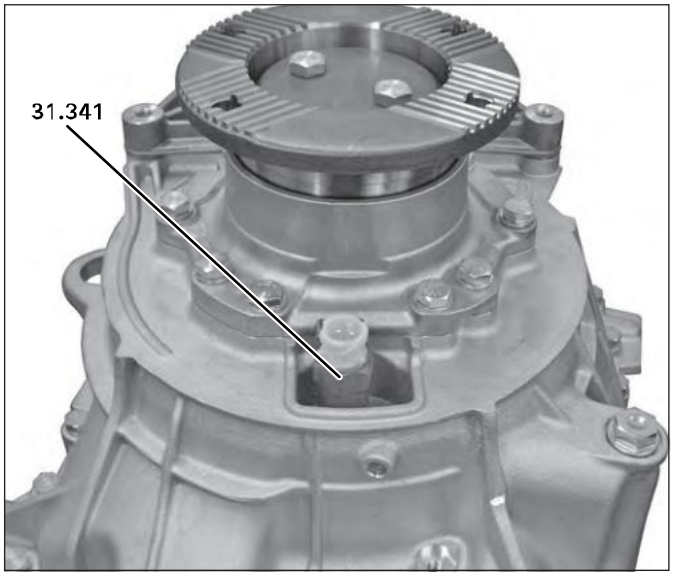

Basic transmission

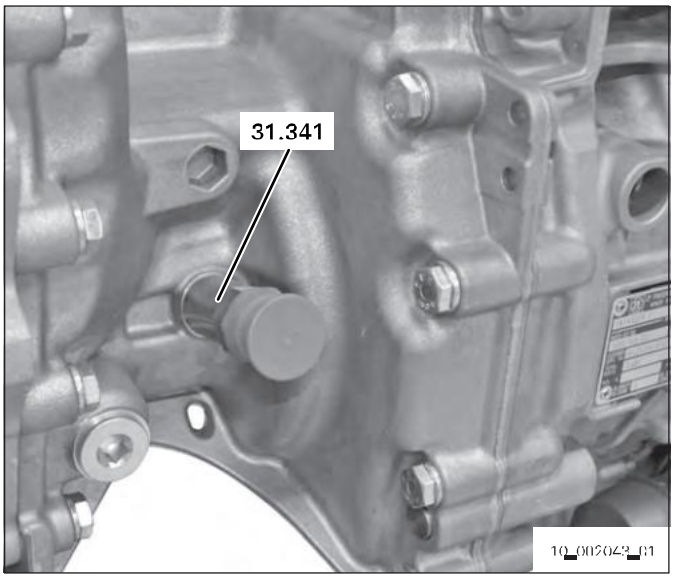

Transmission with INTARDER

Installing the speed sensor

1 Insert new O-ring **(1)**.

2 Grease the O-ring **(1)** on the speed sensor **71.031**.

3 Insert speed sensor in transmission housing and secure with hexalobular driving screw **71.033**.
M6 tightening torque: **9.5 Nm**

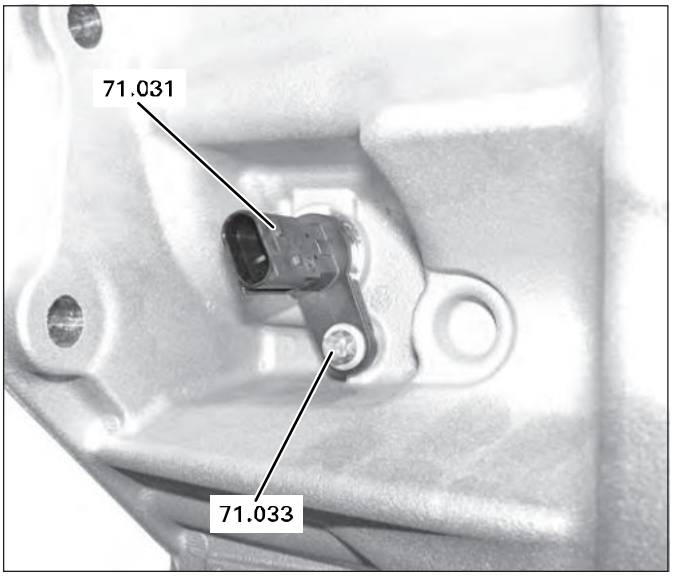

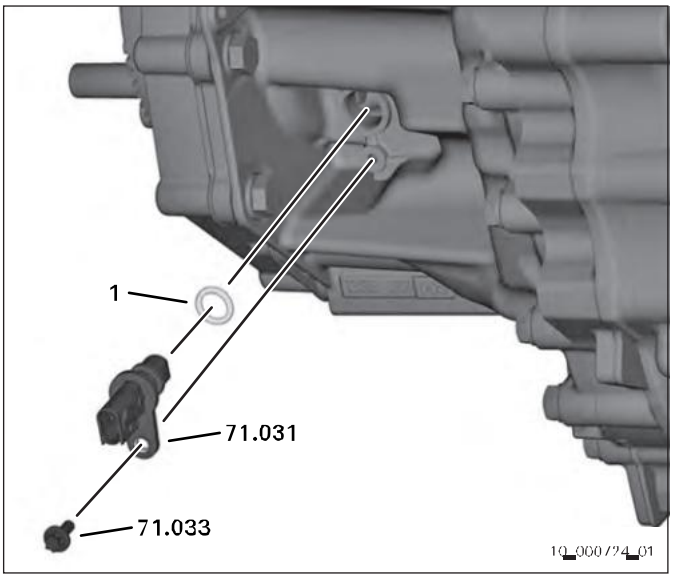

Mounting the heat exchanger

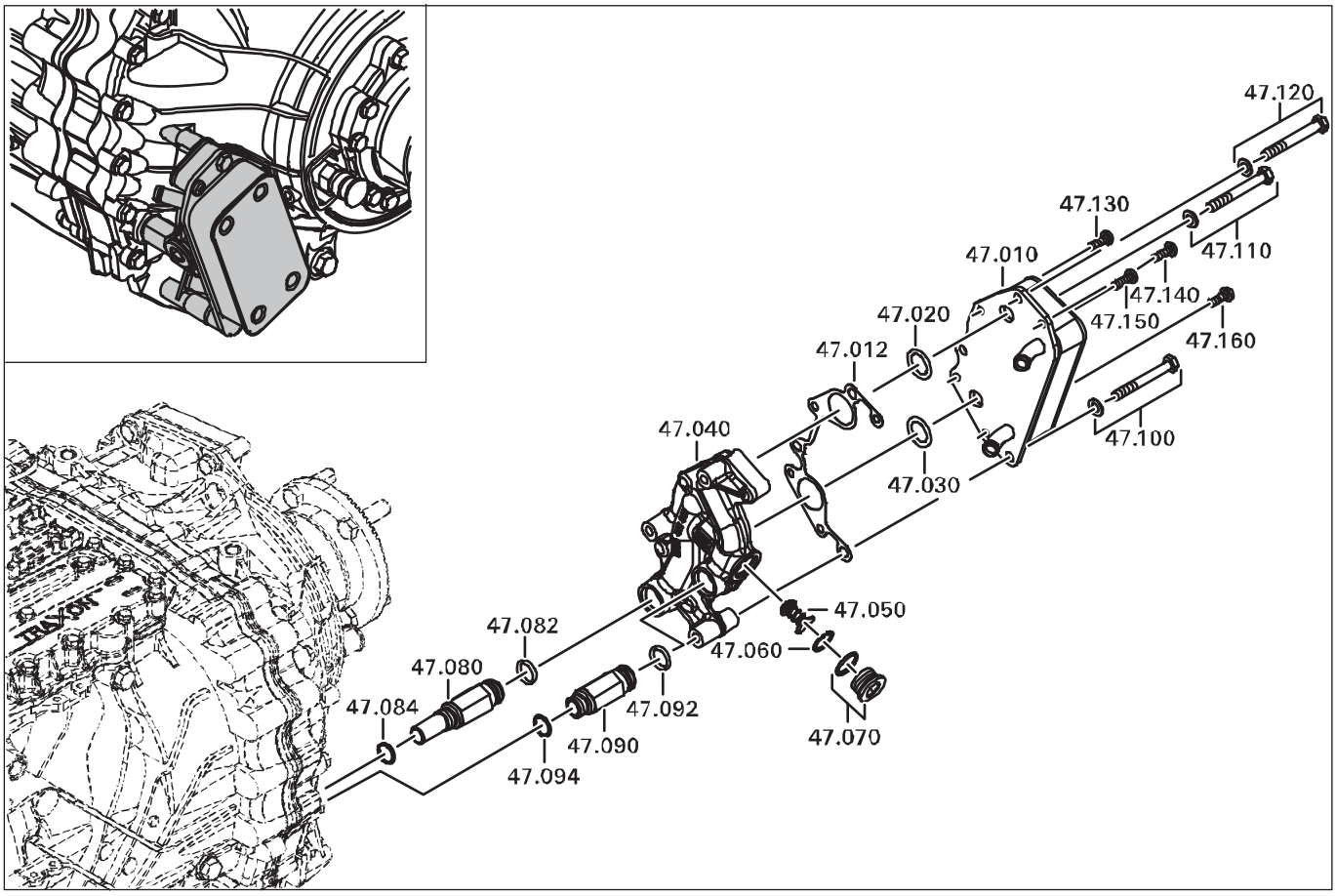

03667 /

Legend

47.010	Heat exchanger
47.012	Seal
47.020	O-ring
47.030	O-ring
47.040	Valve housing
47.050	Valve internal parts
47.060	Securing ring
47.070	Screw plug
47.080	Union screw
47.082	O-ring
47.084	O-ring
47.090	Union screw
47.092	O-ring
47.094	O-ring
47.100	Hexagon screw
47.110	Hexagon screw
47.120	Hexagon screw
47.130	Torx screw
47.140	Torx screw
47.150	Torx screw
47.160	Torx screw

1 Insert O-rings **47.082, 47.084** inunion screw **47.080**.

2 Insert O-rings **47.092, 47.094** inunion screw **47.090**.

3 Screw union screws **47.080**, **47.090** into R/C housing.
Tightening torque: **60 Nm**

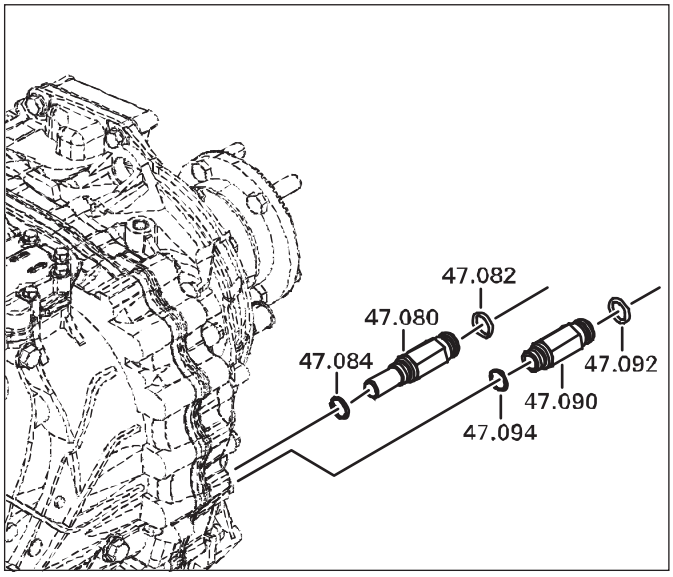

036607

4 Insert O-rings **47.020, 47.030** intovalve housing **47.040** and put on seal **47.012**.

5 Fix seal **47.012** with two dowel pins.

6 Attach the heat exchanger **47.010** to the valve housing **47.040** with four Torx screws **47.130, 47.140, 47.150, 47.160** and pre-tighter.
Tightening torque: **5 Nm**

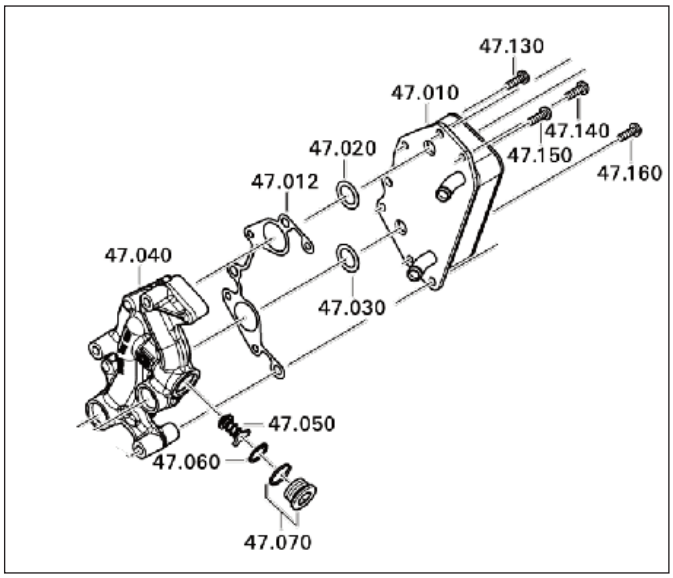

XXX

7 Insert valve internal parts **47.050**.

8 Insert securing ring **47.060**. Securing ring must rest firmly on the groove base.

9 Screw in screw plug **47.070** with a new sealing ring into the valve housing and tighten by hand. Do not tighten the screw connections to the specified tightening torque until after the test run.

10 Grease the two bores on the valve housing **47.040** with **0.3 g of Vaseline** (0671.190.158) each.

11 Place heat exchanger unit (heat exchanger with valve housing) on the two union screws **47.080, 47.090** and mount onto the R/C housing in a plane manner.

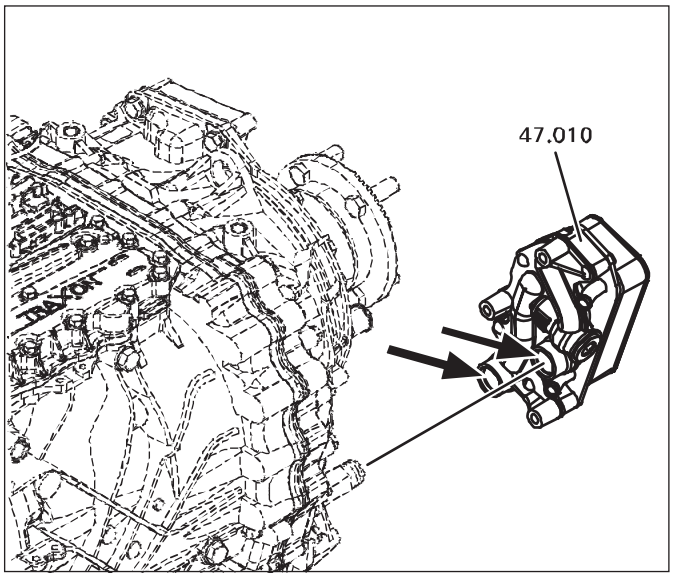

036608

12 Fasten the heat exchanger unit to the R/C housing using three hexagon screws with washers **47.100, 47.110, 47.120.**
M10 tightening torque: **46 Nm**

13 Now tighten the four torx screws **47.130, 47.140, 47.150, 47.160** to the specified tightening torque.
M8 tightening torque: **23 Nm**

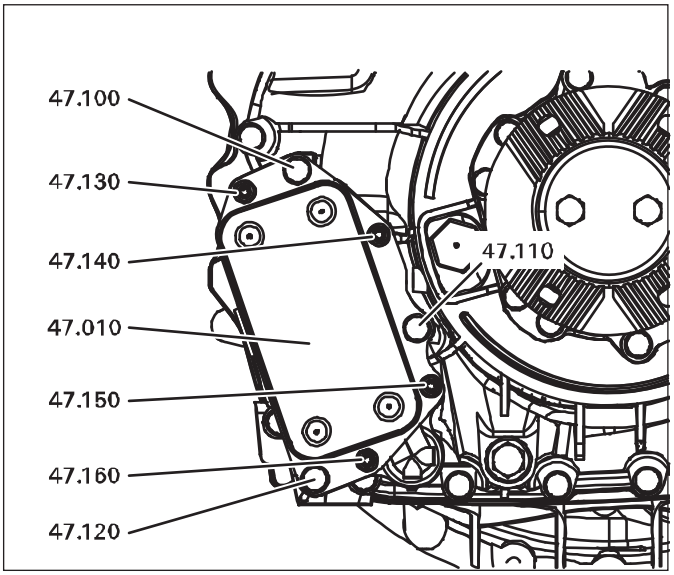

036609

14 After the test run, tighten the screw plug **47.070** to the specified tightening torque.
M30x1.5 tightening torque: **80 Nm**

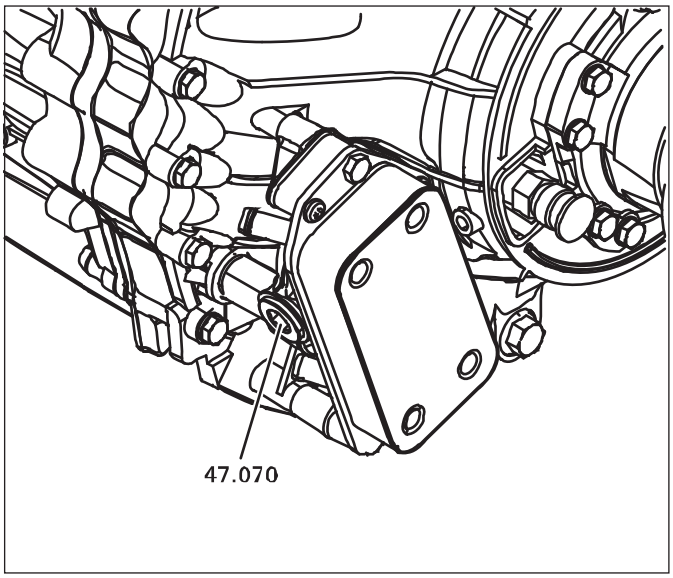

036C86_3

Compressed-air connection

Removing the connecting nozzle

1 Unscrew connecting nozzle **59.010**.

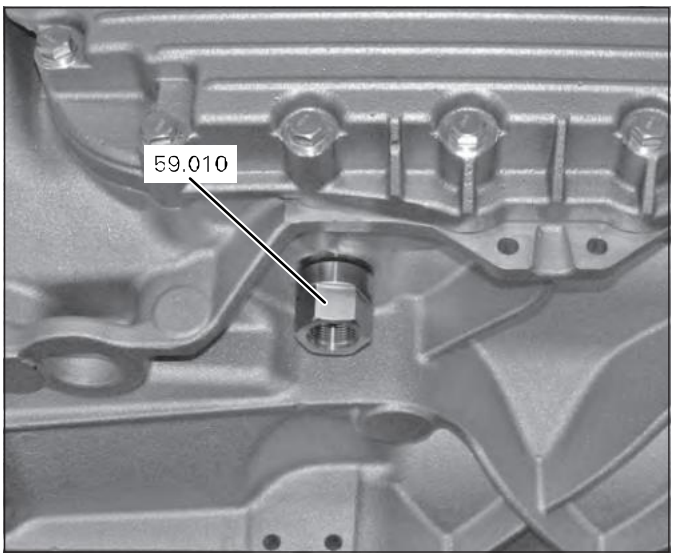

035616_1

2 Push out screen insert **59.020** in direction of arrow and clean.

3 Remove O-rings **59.030, 59.040** from connecting nozzle **59.010**.

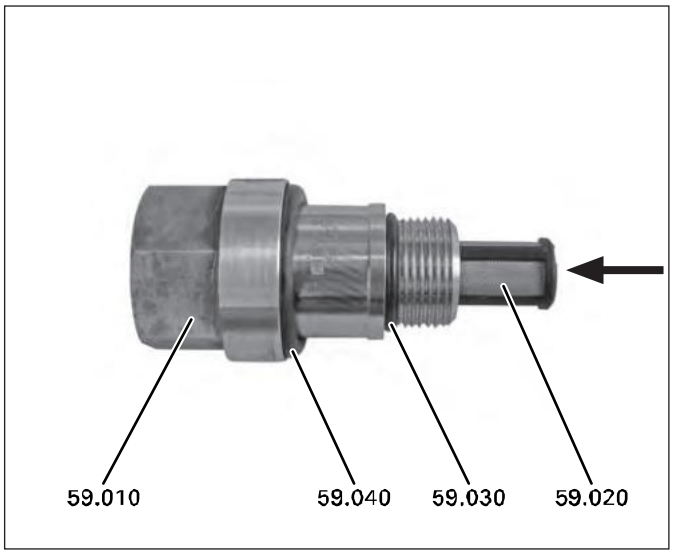

035617_1

Installing the connecting nozzle

1 Insert screen insert **59.020** in direction of arrow.

2 Lightly grease new O-rings **59.030, 59.040** and install on the connecting nozzle **59.010**.

3 Screw connecting nozzle **59.010** into the housing.
Tightening torque: **50 Nm**

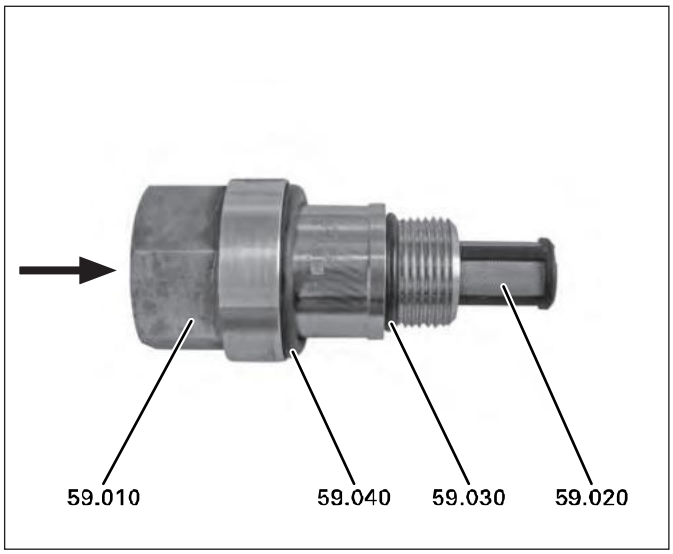

035617_2

Installing the selector actuator

⚠ Comply with ESD protection *(refer to Chapter ESD Protection)*.

1 Clean the sealing faces on the transmission housing **(3)** and on the selector actuator **27.040**.

2 The splash protection **27.042** is only installed on model range 16.
Insert splash protection **27.042**.

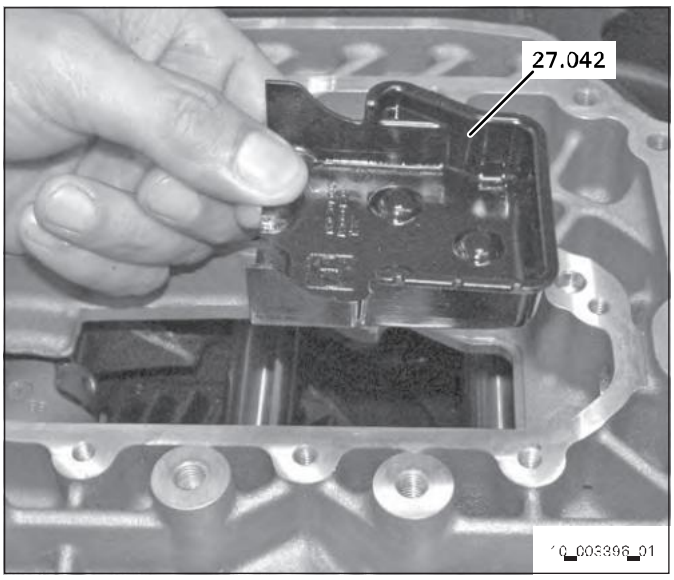

Model range 16

3 Pull out the piston rod **(5)** as far as it will go, see arrow.

4 Turn the driver **(4)** to the side and outwards until the limit stop is reached, see arrow.

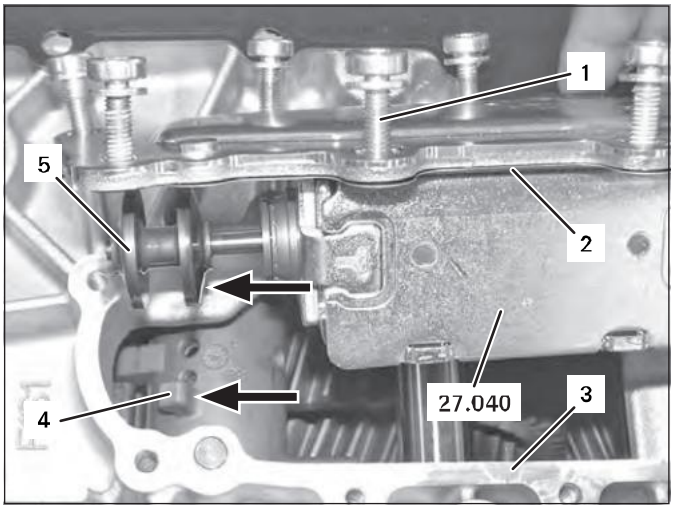

036821

5 **Observe the following:**
If the driver **(4)** does not engage in the piston rod **(5)** of the selector actuator or a mixed up selector actuator is installed (12-speed into 16-speed), no gear or only an incorrect gear can be engaged. Consequently, it is possible to set off in the wrong direction of travel.

Position selector actuator **27.040** with new seal **(2)**. During this process, the driver **(4)** must engage in the piston rod **(5)** of the selector actuator.

6

Do not use a cordless screwdriver or impact wrench.

Secure the selector actuator **27.040** with nine M6x22 torx screws **(1)**.
Tightening torque: **14 Nm**

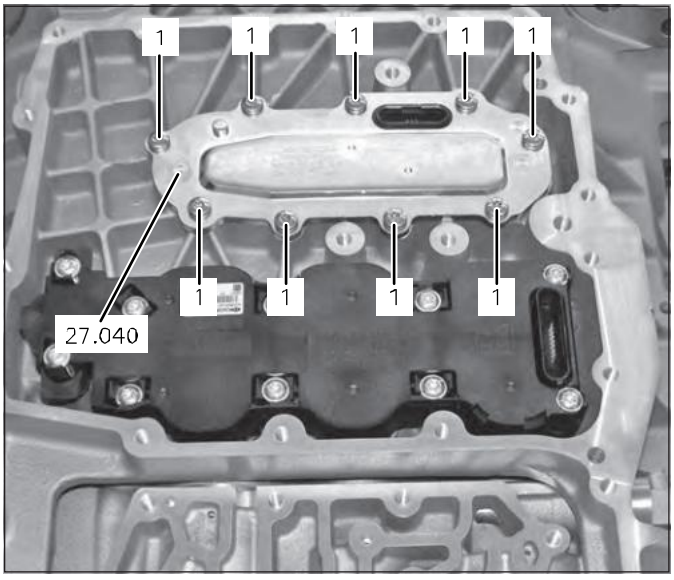

036603

Installing the sensor module

⚠ Comply with ESD protection *(refer to Chapter ESD Protection)*.

1 Clean the sealing faces **(3)**.

2 Clean the dirt from the sensor surface **(6)** facing the oil chamber.

3 Insert new seals **(5)**.

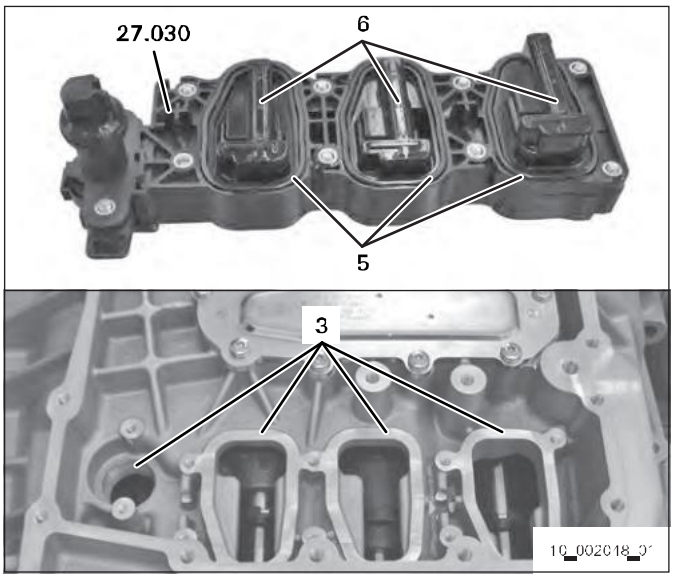

4 Insert and grease new O-ring **(4)**.

5 Position sensor module **27.030**.

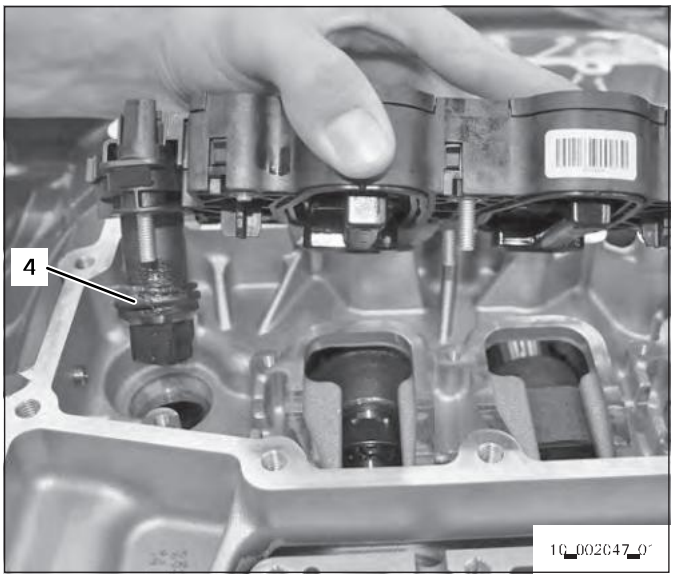

6

Do not use a cordless screwdriver or impact wrench.
The screws are in contact with the loss-prevention device. To avoid damaging the sensor module **27.030** , tighten screws in succession in two steps.

Carefully screw in ten torx screws **(1)** by hand in succession until contact is made. Then press on the sensor module **27.030** by hand and tighten the ten torx screws with a torque wrench.
M6 tightening torque: **9.5 Nm**

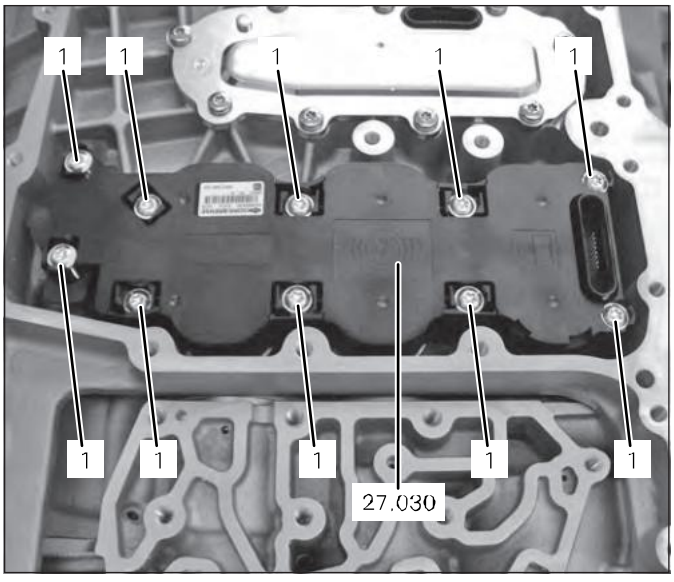

Installing the valve block

⚠ Comply with ESD protection *(refer to Chapter ESD Protection)*.

1 Clean the sealing faces.

2 Attach new seal **(4)** to the valve block using two pins **(3)**.

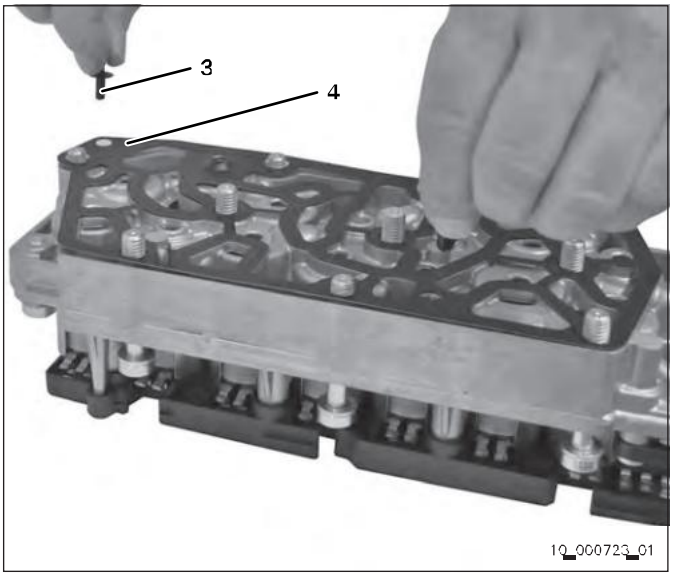

3 Position valve block **27.010**.

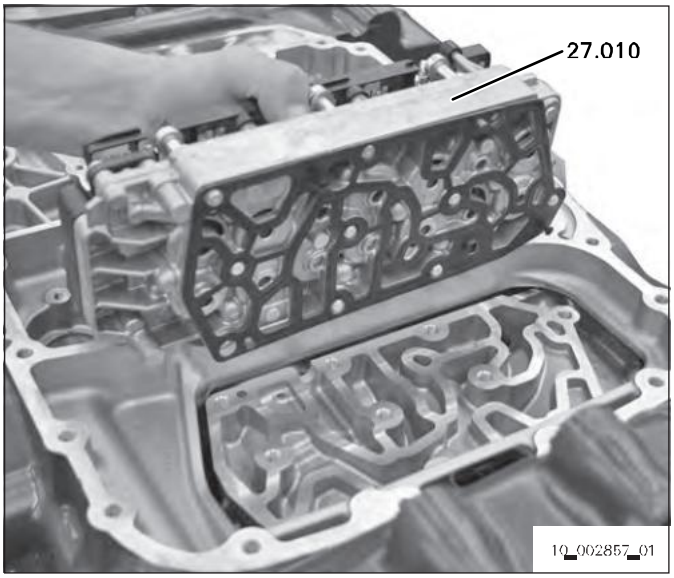

4 First tighten the inner three torx screws **(2)** on the valve block.
Tightening torque: **23 Nm**

5 Afterwards, tighten the outer seven torx screws **(1)** on the valve block.
Tightening torque: **23 Nm**

6 After having tightened the outer seven torx screws **(1)**, tighten the inner three torx screws **(2)** once again.
Tightening torque: **23 Nm**

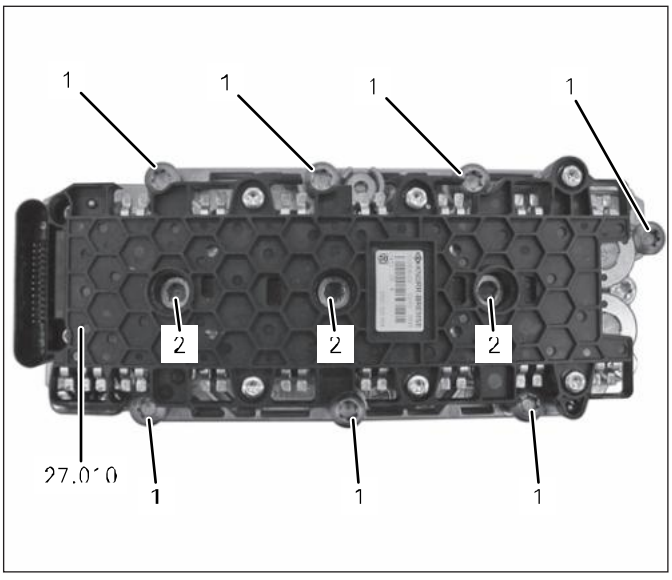

Installing the transmission control

⚠ CAUTION

Risk of injury due to live parts.
Slight to moderate injury possible.
⇨ De-energize vehicle.

Observe the following:

- Before removing or installing the cables on the vehicle end, switch off the ignition or disconnect the power supply via the main battery switch.
- Comply with ESD protection *(refer to Chapter ESD Protection)*.
- It is prohibited to disconnect or connect energized plug connections; this might lead to unpredictable incidents which cause injuries, e.g., jamming due to sudden movements.

The transmission control must be completely screwed to the transmission before the vehicle plug is electrically connected.

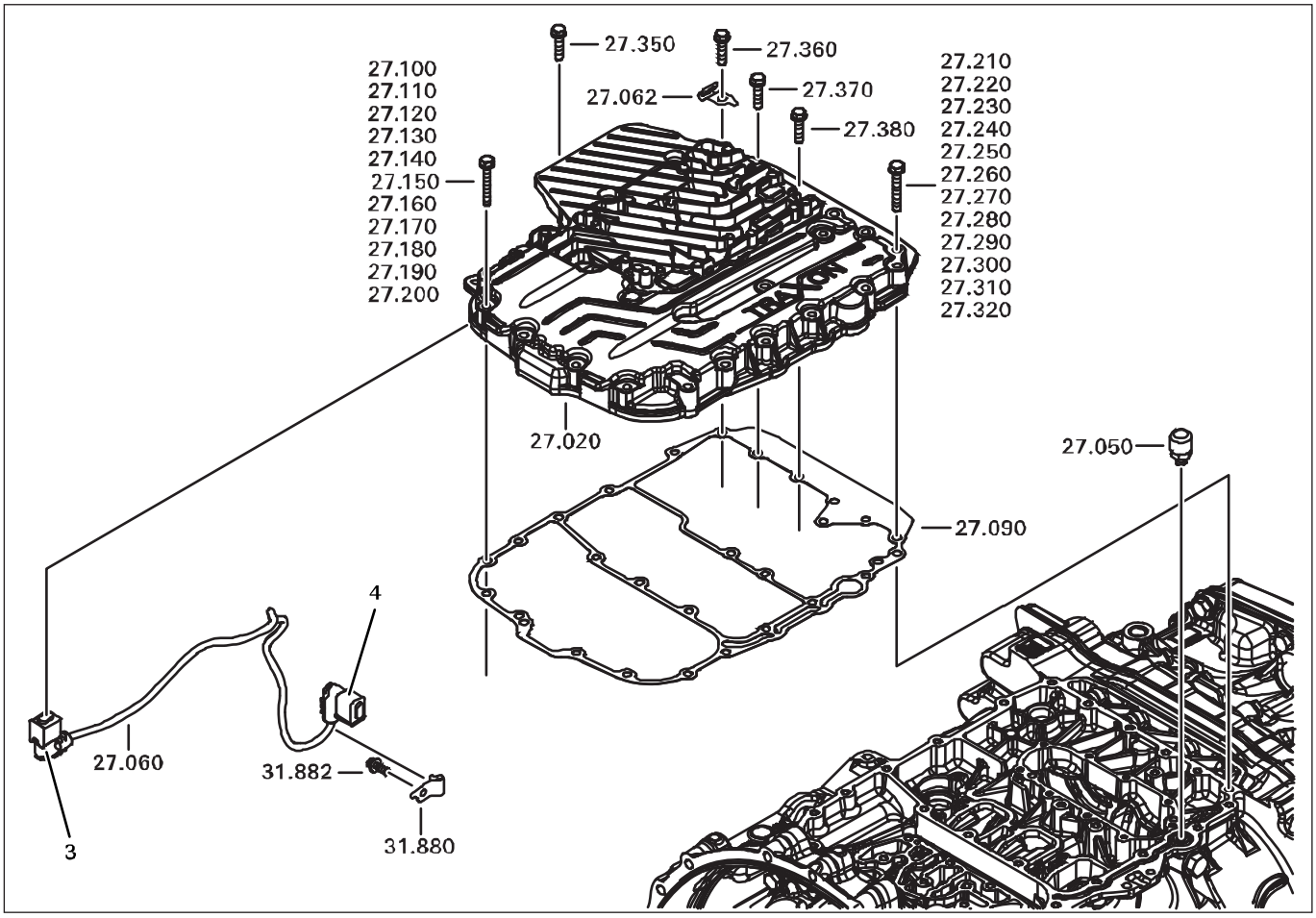

035a86

Legend

27.020	Transmission control	27.150	Hexagon screw **(1)**	27.270	Hexagon screw **(1)**
27.050	Breather	27.160	Hexagon screw **(1)**	27.280	Hexagon screw **(1)**
27.060	Cable TRAXON	27.170	Hexagon screw **(1)**	27.290	Hexagon screw **(1)**
	Socket connector **(3)**	27.180	Hexagon screw **(1)**	27.300	Hexagon screw **(1)**
	Socket connector **(4)**	27.190	Hexagon screw **(1)**	27.310	Hexagon screw **(1)**
27.062	Cable clamp	27.200	Hexagon screw **(1)**	27.320	Hexagon screw **(1)**
27.090	Flat seal	27.210	Hexagon screw **(1)**	27.350	Hexagon screw **(2)**
27.100	Hexagon screw **(1)**	27.220	Hexagon screw **(1)**	27.360	Hexagon screw **(2)**
27.110	Hexagon screw **(1)**	27.230	Hexagon screw **(1)**	27.370	Hexagon screw **(2)**
27.120	Hexagon screw **(1)**	27.240	Hexagon screw **(1)**	27.380	Hexagon screw **(2)**
27.130	Hexagon screw **(1)**	27.250	Hexagon screw **(1)**	31.880	Cable clamp
27.140	Hexagon screw **(1)**	27.260	Hexagon screw **(1)**	31.882	Hexalobular driving screw

M8x55 Hexagon screw **(1)**
M8x35 Hexagon screw **(2)**

Observe the following:
Two guide pins must be used when positioning the transmission control. The transmission control's flex foil may be damaged if no guide pins are used.

1 Clean the sealing faces.

2 Position new seal **27.090** on the transmission housing.

3 Screw in two M8 guice pins **(5)**.

4 Screw in breather **27.050**.
Tightening torque: **10 Nm**

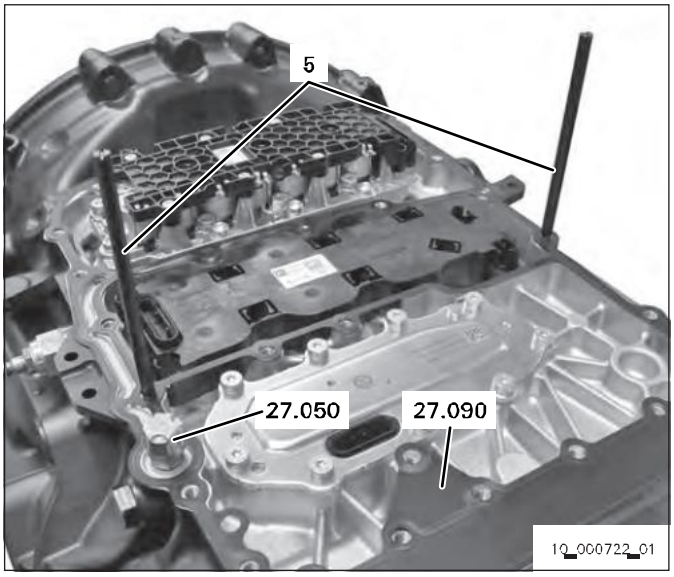

5

The transmission control **27.020** contains integrated electronic components!
When installing the transmission control, the integrated connectors engage in the modules' plug-in connections.

Carefully position transmission control unit **27.020**, avoiding damage to the electronic components.

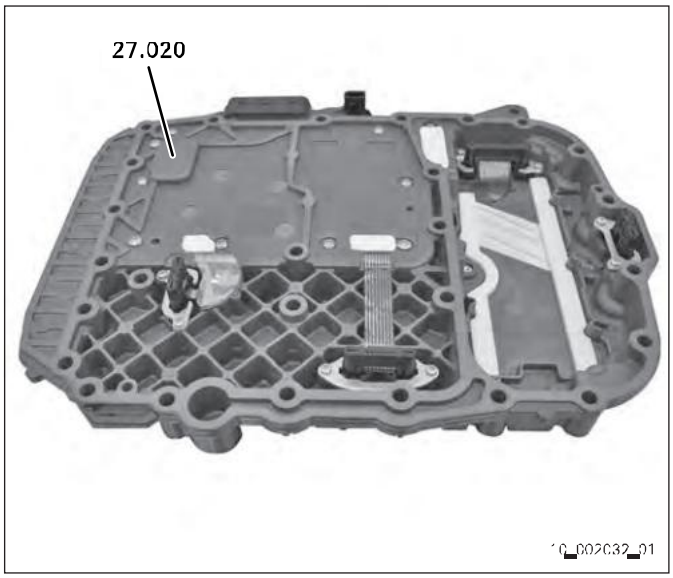

6 Manually screw in 27 M8 hexagon screws but do not tighten yet.

Observe the different lengths of the hexagon screws, refer to Figure 10_001811_01 on the next page.

7 Replace the two guide pins **(5)** with M8 hexagon screws.

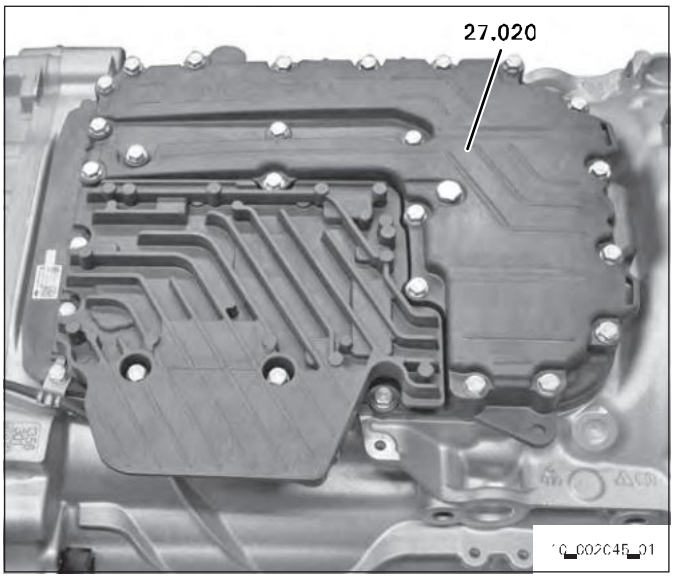

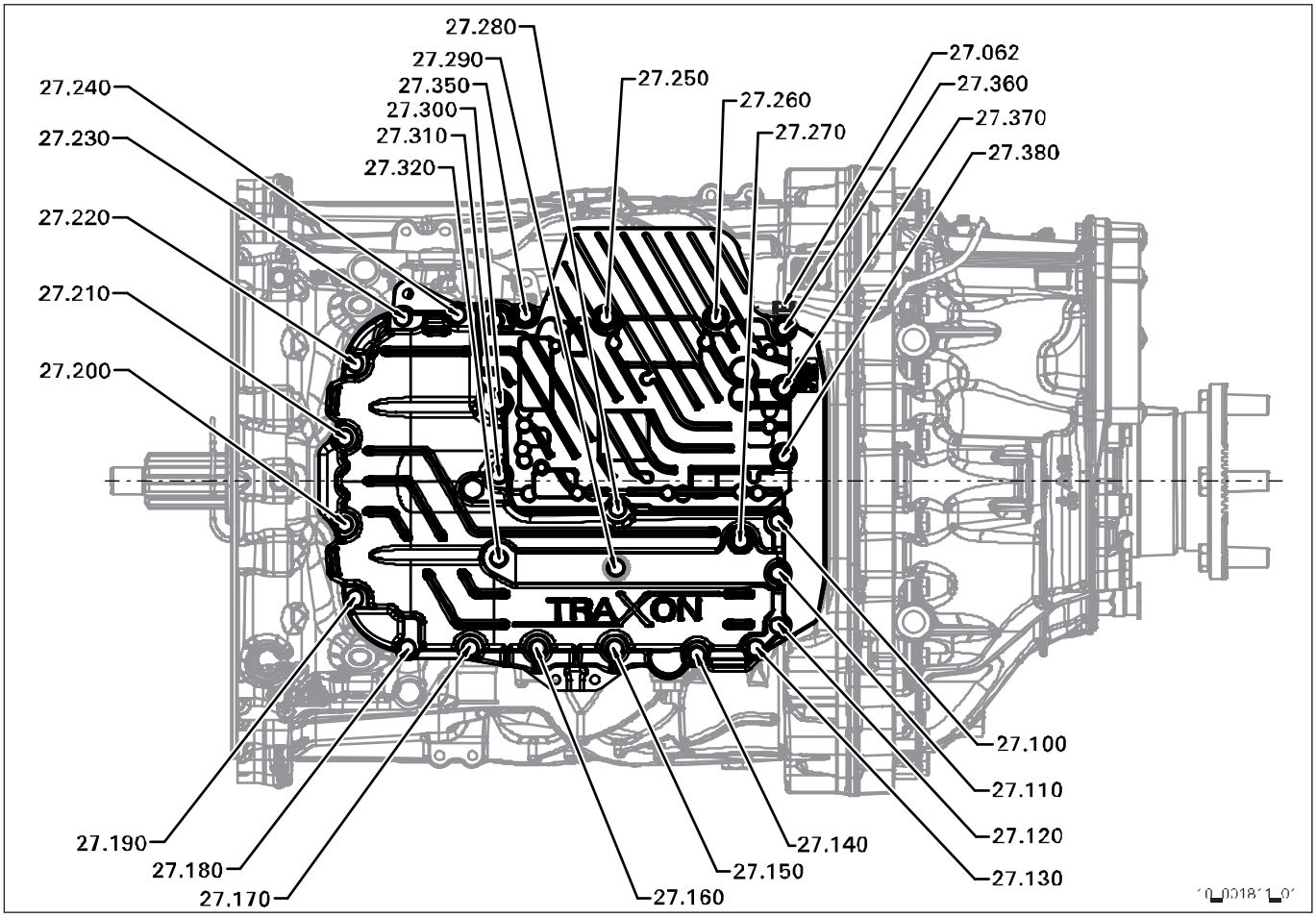

Legend

27.062	Cable clamp	27.230	Hexagon screw **(1)**
27.100	Hexagon screw **(1)**	27.240	Hexagon screw **(1)**
27.110	Hexagon screw **(1)**	27.250	Hexagon screw **(1)**
27.120	Hexagon screw **(1)**	27.260	Hexagon screw **(1)**
27.130	Hexagon screw **(1)**	27.270	Hexagon screw **(1)**
27.140	Hexagon screw **(1)**	27.280	Hexagon screw **(1)**
27.150	Hexagon screw **(1)**	27.290	Hexagon screw **(1)**
27.160	Hexagon screw **(1)**	27.300	Hexagon screw **(1)**
27.170	Hexagon screw **(1)**	27.310	Hexagon screw **(1)**
27.180	Hexagon screw **(1)**	27.320	Hexagon screw **(1)**
27.190	Hexagon screw **(1)**	27.350	Hexagon screw **(2)**
27.200	Hexagon screw **(1)**	27.360	Hexagon screw **(2)**
27.210	Hexagon screw **(1)**	27.370	Hexagon screw **(2)**
27.220	Hexagon screw **(1)**	27.380	Hexagon screw **(2)**

8 Secure cable clamp **27.062** with hexagon screw **27.360**.

Observe the different lengths of hexagon screws **(1** and **2)**.
M8x55 hexagon screws **(1)**
M8x35 hexagon screws **(2)**

9 Fasten transmission control **27.020** with 27 M8 hexagon screws. Tighten screw connection from inside to the outside.
Tightening torque: **29 Nm**

10

Replace cable clamp **31.880** if necessary:
Fasten the new cable clamp**31.880** to the R/C housing with screw **31.882**.
Tightening torque: **9.5 Nm**

Insert cable **27.060** into the cable clamps **27.062, 31.880**.

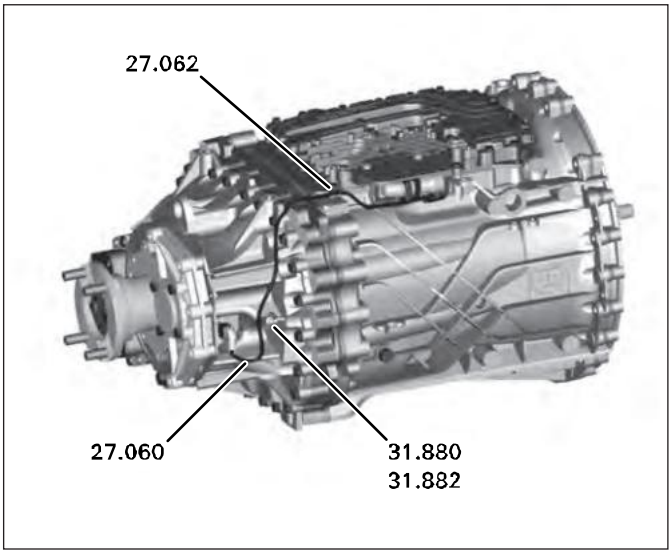

3603_3

11

- Assemble the socket connector **(3)** in a strain-relieved way.
- The locking slide **(6)** can only be closed after the socket connector has been put on the counterpiece (mating plug) until the pressure point is reached.

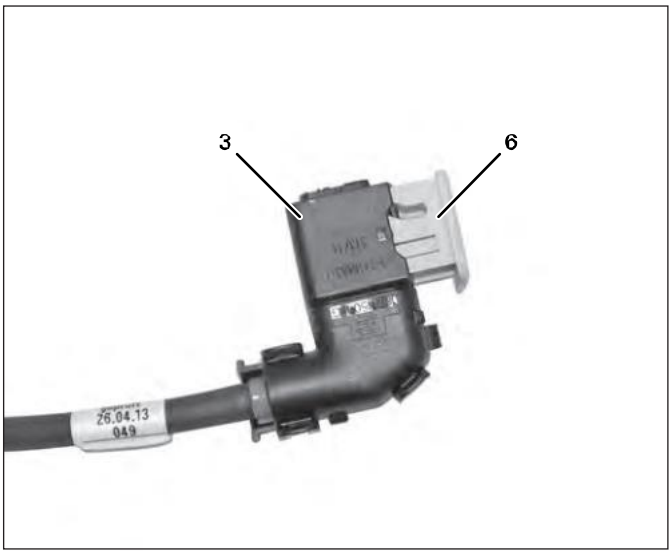

036494_1

Insert the socket connector **(3)** into the transmission control.
Close locking slide **(6)**.

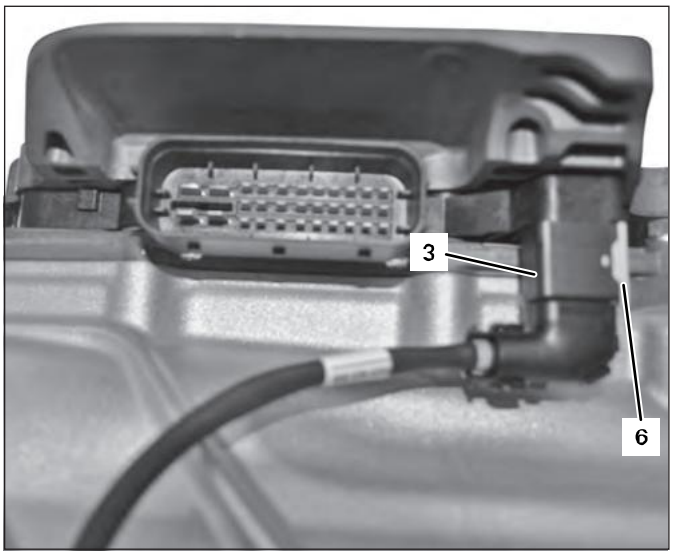

036225_2

12

- Assemble the socket connector **(3)** in a strain-relieved way.
- The locking slide **(6)** can only be closed after the socket connector has been put on the counterpiece (mating plug) until the pressure point is reached.

Insert the socket connector **(4)** into the speed sensor.
Close locking slide **(6)**.

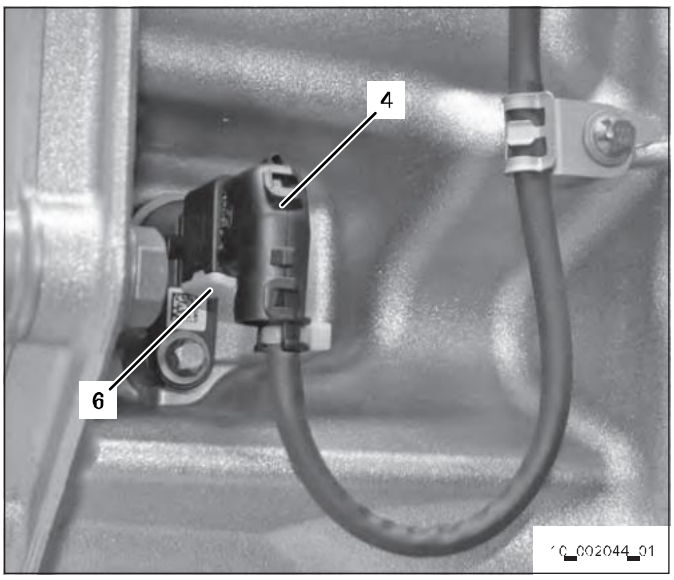

Final assembly

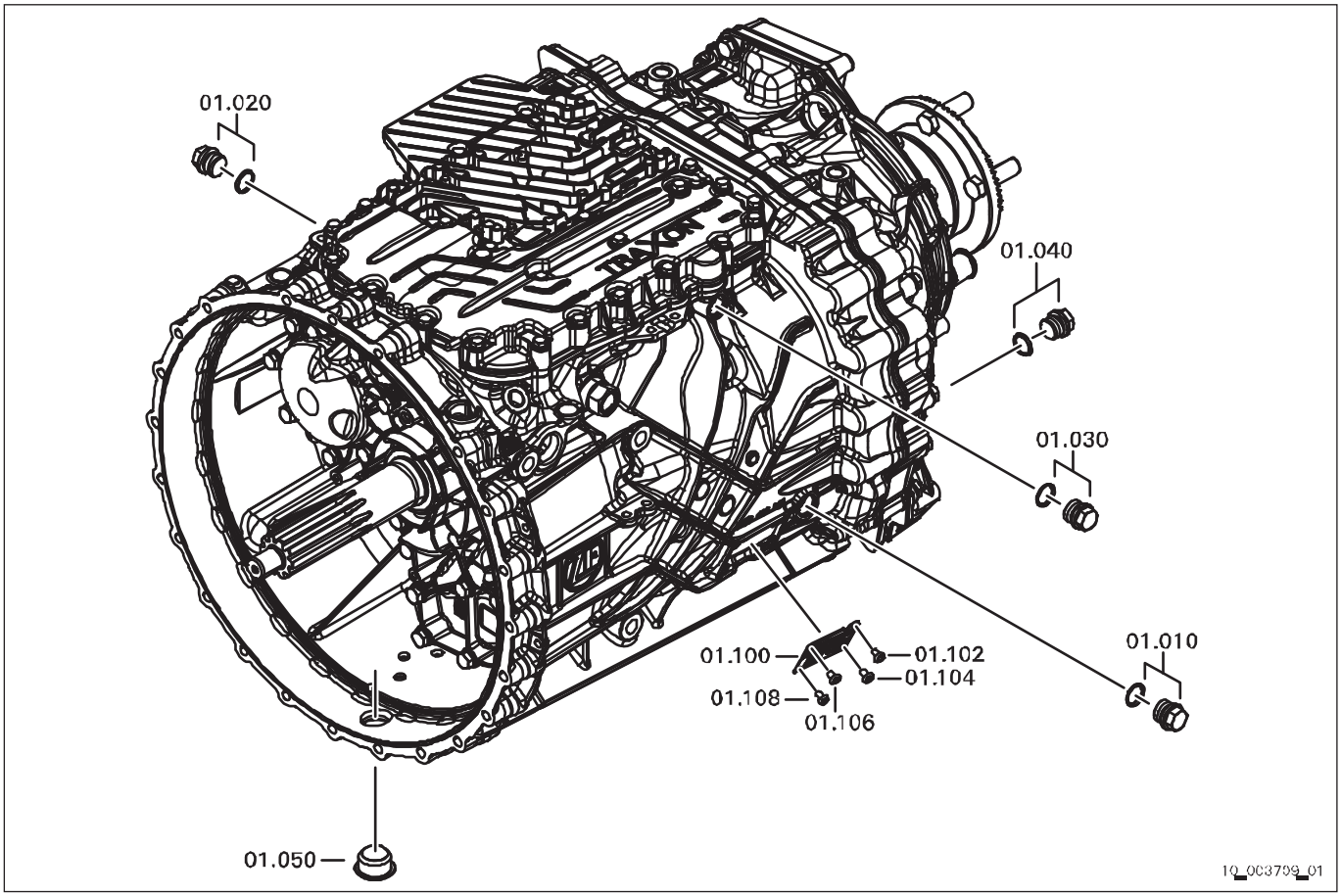

1 Replace sealing rings on the screw plugs.
Screw in screw plugs **01.010, 01.020, 01.030, 01.040** and tighten.
Tightening torque: **60 Nm** respectively.

2 Attach type plate **01.100** with four blind rivets **01.102, 01.104, 01.106, 01.108**.

3 Insert protection cap **01.050**.

Checking leak tightness

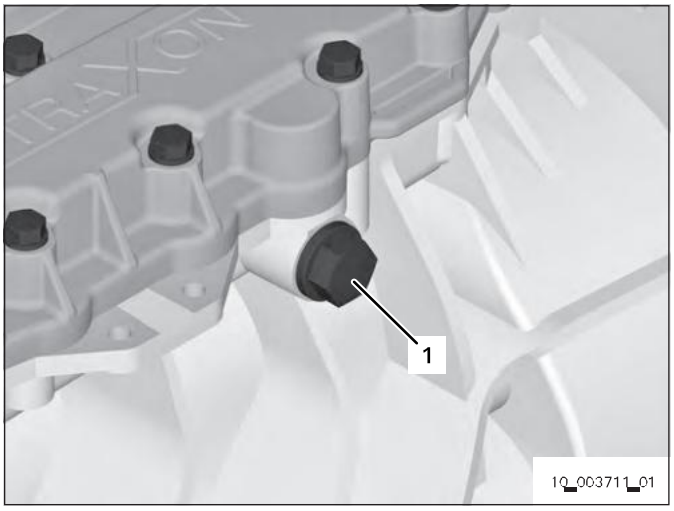

1 The leak test of the transmission must be performed on test benches only after every repair or remanufacturing of the transmission. The test is executed throughout the complete test run. The tester performs a visual inspection after the test run.
The test pressure of 0.15 to 0.2 bar must not be exceeded, otherwise the transmission will be damaged (cap-shaped seal, shaft sealing ring).

1 Remove screw plug **(1) 01.030**.

2 Screw in adapter **(1) 1P81.215.038** by hand until firmly home.

3 Carry out leak test according to workflow.

Connection thread of air supply G1/4".

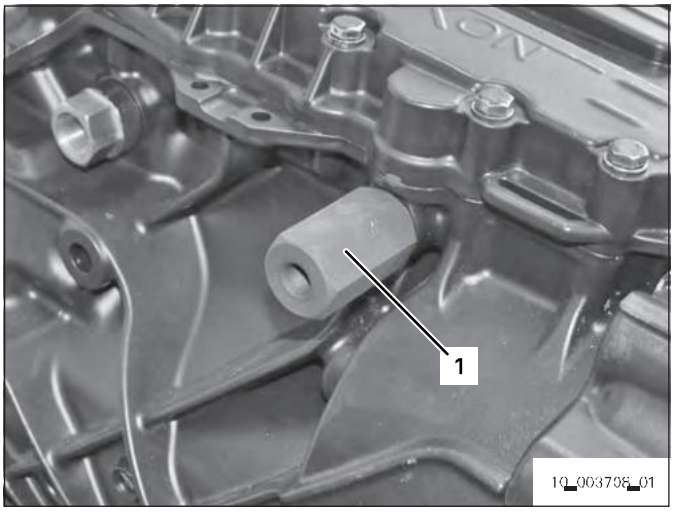

4 Remove adapter **(1) 1P81.215.038**.

5 Screw in screw plug **(1) 01.030** and tighten.
Tightening torque: **60 Nm**

Annex

Overview of revisions

Comparison table for grease quantities

Installation instructions for greasing 0000.702.644

Overview of revisions

Index	Date of issue	Chapter	Initiator	Comment
b	2017-05	Title	TUQG Dept.	Bus application added
		Preface	TTQS Dept.	Changed
		Safety	TTQS Dept.	New
		Instructions for repair	TTQS Dept.	Changed
		Product designation	TTQS Dept.	New
		ESD protection	TTQS Dept.	Changed
		Workshop equipment	TTQT Dept.	Changed
		Tightening torques	TTQS Dept.	Removed
		Truck transmission overview	TTQT Dept.	Changed
		Bus transmission overview	TUQG Dept.	New
		Maintenance	TTQS Dept.	Changed
		Preparatory work	TTQT Dept.	Changed
		Bleeding the ConAct	TTQT Dept.	Changed
		Shift System	TTQT Dept.	Changed
		Transmission control	TTQT Dept.	Changed
		Valve block	TTQT Dept.	Changed
		Sensor module	TTQT Dept.	Changed
		Selector actuator	TTQS Dept.	Changed
		Heat exchanger	TTQT Dept.	Changed
		Compressed-air connection	TTQT Dept.	Changed
		Removing the ConAct	TTQT Dept.	Changed
		Output flange	TTQS Dept.	Changed
		Bearing support	TTQT Dept.	Changed
		Main shaft	TTQT Dept.	Changed

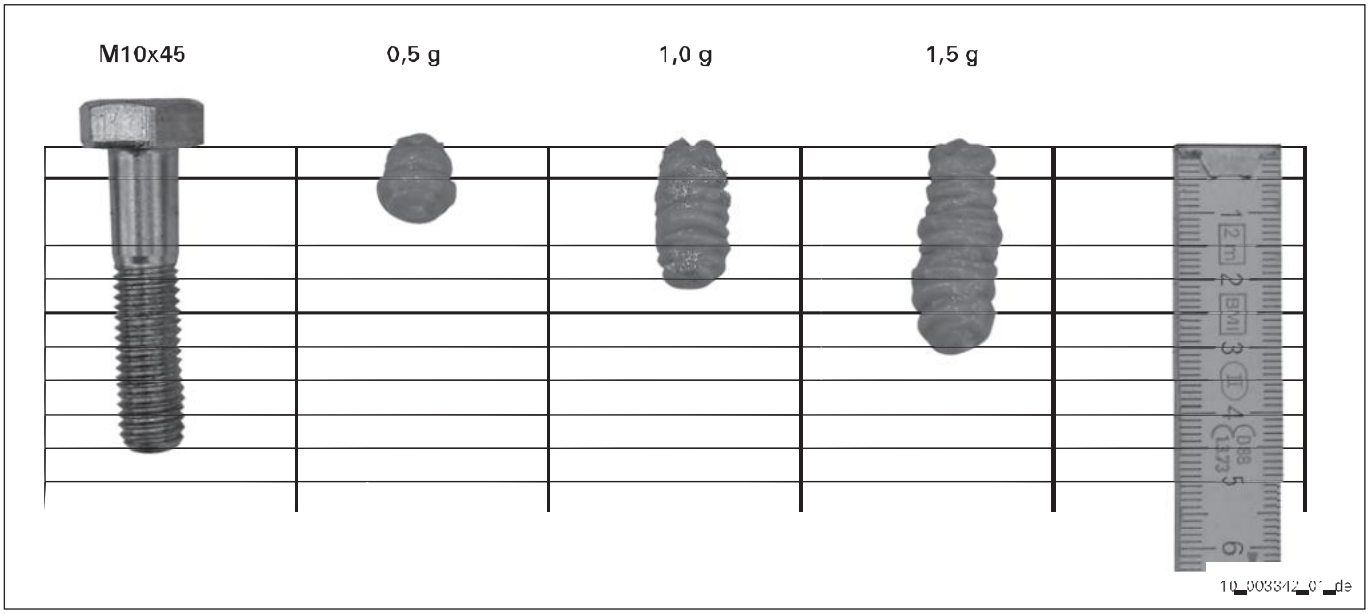

Example for visualizing the grease quantity

Nur zur Information / For information only

HG-HG
2:1

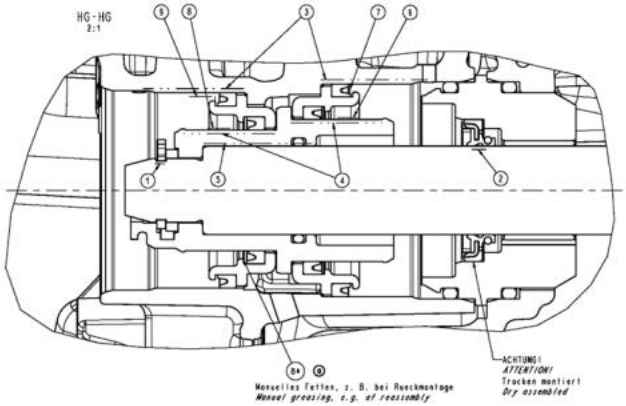

Pos. Pos.	Hauptgruppe HG *Main group MG*	Menge *Quantity*	Toleranz *Tolerance*
①	Schaltschiene Nut *Gearshift rail groove*	0.2 g	±0.1 g
②	Hutmanschette innen *Cup seal inside*	0.4 g	±0.1 g
③	Anschlussplatte/Zylinderlaufflaeche *Connection plate/cylinder running surface*	3.3 g	±0.3 g
④	Zentralkolben Laufflaeche *Central piston running surface*	2.4 g	±0.4 g
⑤	Zentralkolben innen *Central piston inside*	0.2 g	±0.1 g
⑥	Zentralkolben nachfetten *Grease central piston subsequently*	1.2 g	±0.2 g
⑦	Nutring stirnseitig *Grooved ring on face side*	1.2 g	±0.2 g
⑧	Zentralkolben nachfetten *Grease central piston subsequently*	0.6 g	±0.1 g
⑨	Anschlussplatte nachfetten *Grease connection plate subsequently*	0.6 g	±0.1 g
⑥ (B+)	Zentralkolben fetten *Grease central piston*	1.1 g	±0.2 g

GBR-GBR
2:1

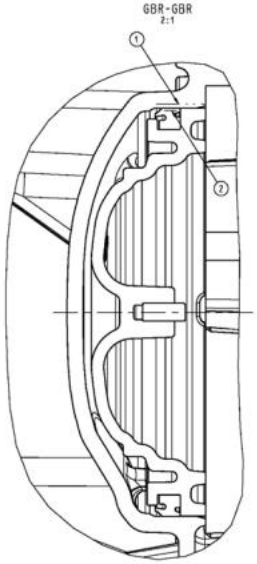

Pos. Pos.	Getriebebremse *Transmission brake*	Menge *Quantity*	Toleranz *Tolerance*
①	Anschlussplatte Zylinder *Connection plate cylinder*	1.2 g	±0.2 g
②	Nutring aussen *Grooved ring outside*	0.8 g	±0.1 g

GV-GV
2:1

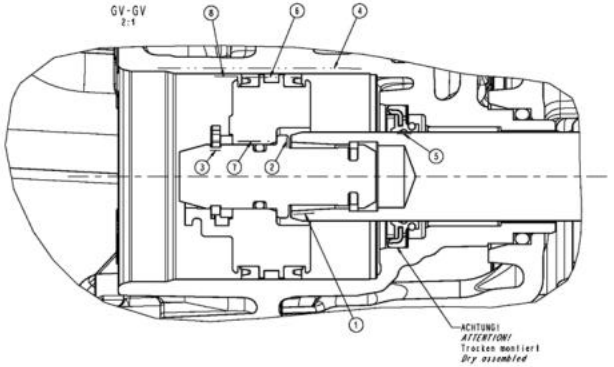

Pos. Pos.	Splitgruppe GV *Splitter group S/G*	Menge *Quantity*	Toleranz *Tolerance*
①	Schaltschiene Einfuehrfase *Gear shift rail lead-in chamfer*	0.8 g	±0.2 g
②	Aufnahmebolzen Bund *Locating bolt shoulder*	0.2 g	±0.1 g
③	Aufnahmebolzen Nut *Locating bolt groove*	0.2 g	±0.1 g
④	Anschlussplatte/Zylinderlaufflaeche *Connection plate/cylinder running surface*	1.4 g	±0.2 g
⑤	Hutmanschette innen *Cup seal inside*	0.4 g	±0.1 g
⑥	Zwischenraum Kolben-Nutring *Clearance piston-grooved ring*	1.8 g	±0.3 g
⑦	Kolben innen *Piston inside*	0.2 g	±0.1 g
⑧	Anschlussplatte nachfetten *Grease connection plate subsequently*	1.1 g	±0.2 g

GP-GP
2:1

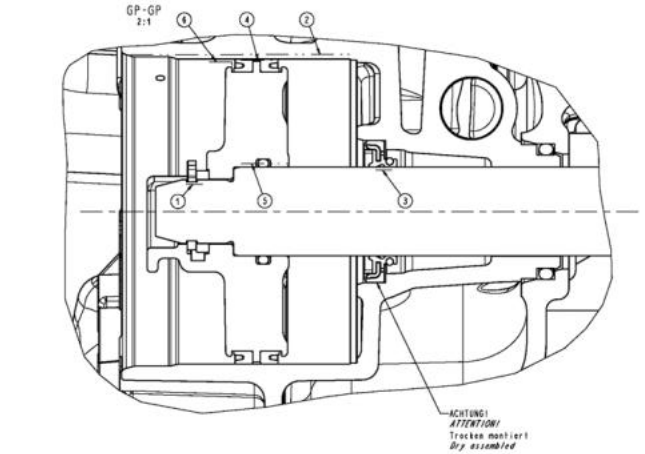

Pos. Pos.	Nachschaltungsgruppe GP *Range change group R/C*	Menge *Quantity*	Toleranz *Tolerance*
①	Schaltschiene Nut *Gearshift rail groove*	0.2 g	±0.1 g
②	Anschlussplatte/Zylinderlaufflaeche *Connection plate/cylinder running surface*	1.8 g	±0.2 g
③	Hutmanschette innen *Cup seal inside*	0.4 g	±0.1 g
④	Zwischenraum Kolben-Nutring *Clearance piston-grooved ring*	1.6 g	±0.3 g
⑤	Kolben innen *Piston inside*	0.2 g	±0.1 g
⑥	Anschlussplatte nachfetten *Grease connection plate subsequently*	1.1 g	±0.2 g

— · — Fett gleichmaessig auf gekennzeichneten Flaechen verteilen, Flaechen vollkommen benetzen
Distribute grease uniform on marked areas, moisten areas completely

Dat.	15-03-02	15-05-05	-	-	23-05-05	-	-	-	-	-	Masse *Mass*	kg			
Name	BRANDLMA	GRAF	---	---	FUDIZ	---	16-08-02	SCHE/HEB	-	a					
	Genehm. *Dept*	Sonstz. *Design*	Fachbt. *Facil.*	Norm *Stand.*	Fertigg. *Prod*	Vorz. *Expring*	Aend. Datum *Mod. date*	Name *Name*	Aend. Nr *Mod. No*	Dok. vers. *Doc. vers.*	Anhal. Datum Nr *Similar docs. no.*		CAD-System *CAD system*		
											---		PRO/E		
/1	Dieses Dokument darf weder kopiert noch dritten Personen ohne unsere Erlaubnis mitgeteilt werden. Diese Bestimmung ist unser Eigentum. *This document may not be copied or disclosed to third persons without permission of ZF. We are the owner of this design.* ZF Friedrichshafen AG					Technische Information *Technical information* FETTVORSCHRIFT 12/16 TX GREASE INSTRUCTION					Werkstoff/Vergleichs-Nr. *Casting/forging No.*		Blatt *Sheet* 1 *of* 1		
						Benennung *Description* MONTAGEVORSCHRIFT ASSEMBLY SPECIFICATION					Werkstoffnummer *Material number* ---		Masse/Stab *Scale* 1:1		
											Dokumentnummer *Document number* 0000.702.644.1ST001			DIN	A0

Nur zur Information / For information only

ZF Friedrichshafen AG
88038 Friedrichshafen
Deutschland · Germany
Telefon/Phone +49 7541 77-0
Telefax/Fax +49 7541 77-908 000
www.zf.com

MOTION AND MOBILITY

EN 1358.751.102b - 2017-06

VPD71S Front axle



SINOTRUK INTERNATIONAL

After-sales Service Department

Contents

Assembly.....1

Steering operation.....15

Wheel end.....30

Braking.....43

Assembly

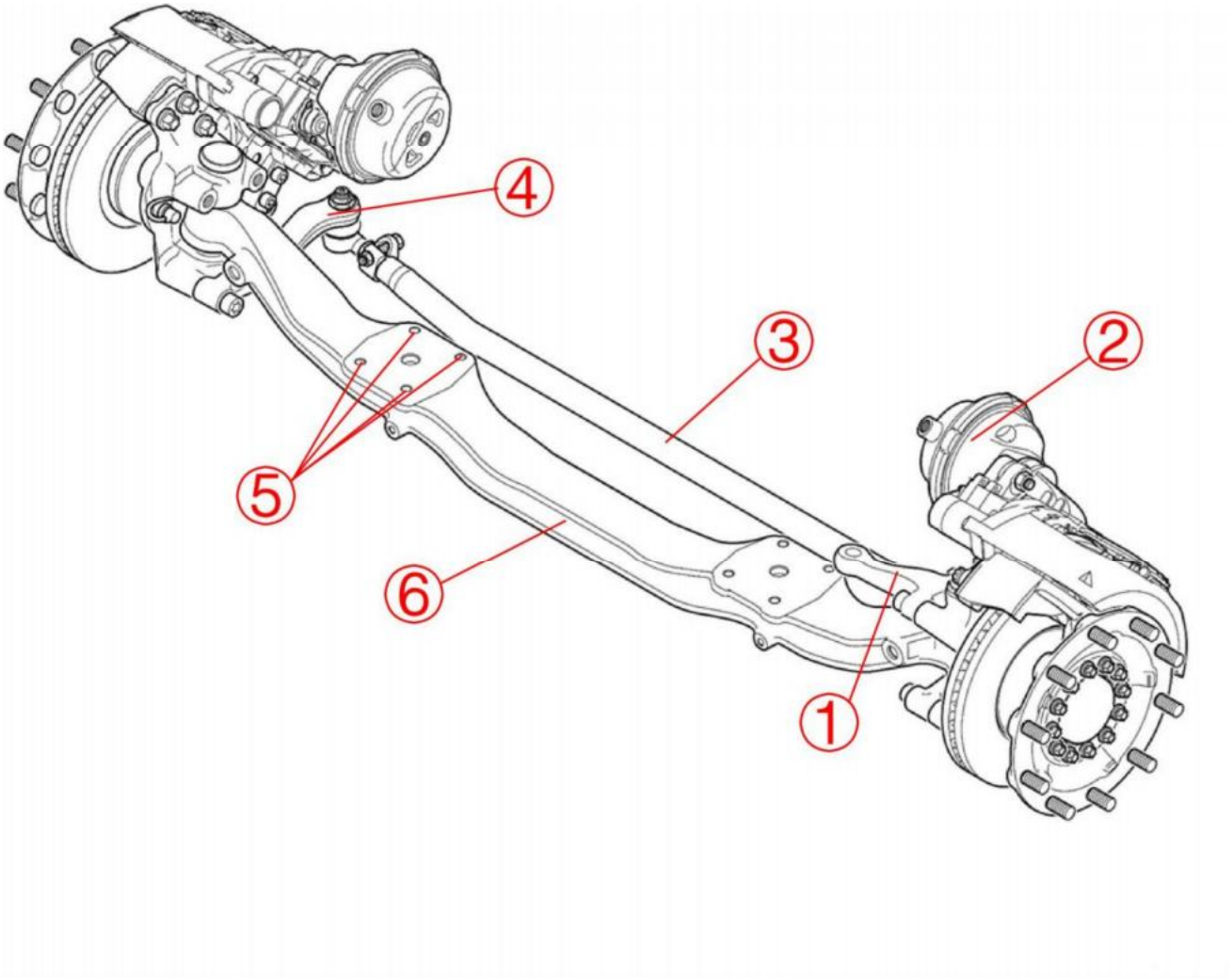

1. Steering knuckle arm. 2. Brake chamber. 3. Tie rod. 4. Tie rod arm. 5. U bolt mounting hole. 6. Front beam

Remove the front tire assembly

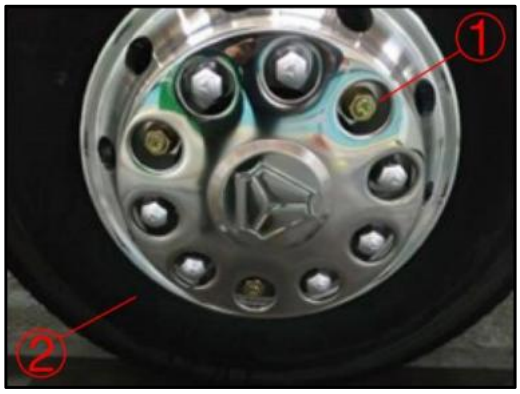

Removal steps

1. Remove the wheel screw nut ① (M22 * 1.5) using a 32mm sleeve and remove the tire assembly ②.

Note: Before removal, please take necessary safety measures and use double jacks to fix the chassis for single wheel.

Remove the stabilizer bar fixing clamp

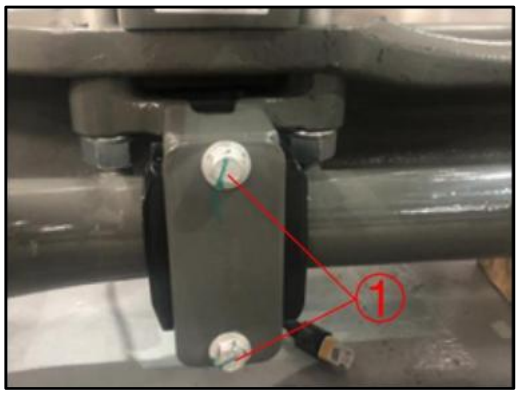

Removal steps

1. Loosen the bolt ① (M10*30) on front axle stabilizer bar fixing clamp using a 13mm sleeve.

Remove the drag link

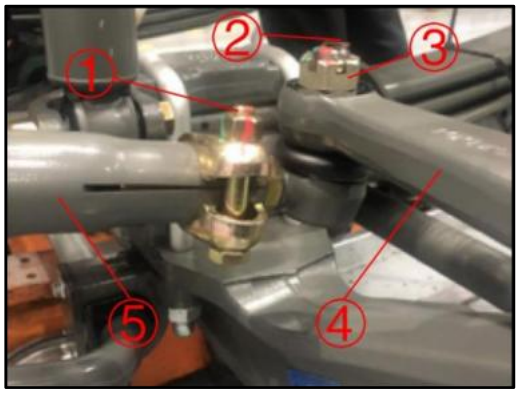

Removal steps

1. Loosen the drag link clamp bolt ① (M14 * 80) using a 21mm sleeve.
2. Restore the deformed locking location of split pin ② using pliers; remove the split pin. Remove the tie rod connecting Slotted nut ③ (M24) using 36mm sleeve; separate the drag link ⑤ from the steering knuckle arm ④.

Remove the air chamber hose

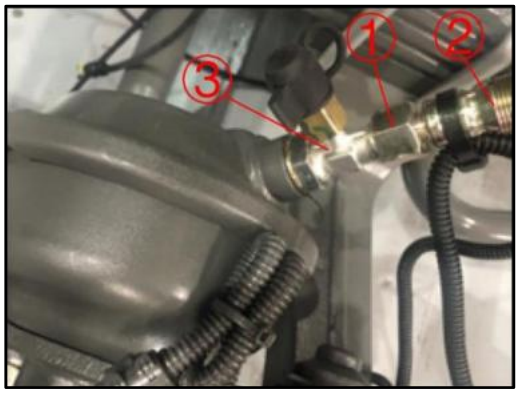

Removal steps

1. Remove the hose connector screw nut ① (M18) using a 19mm sleeve and separate the hose ② from the connector ③.

Note: Separate the wear alarm wiring harness connector from the ABS wire connector.

Remove the front axle assembly

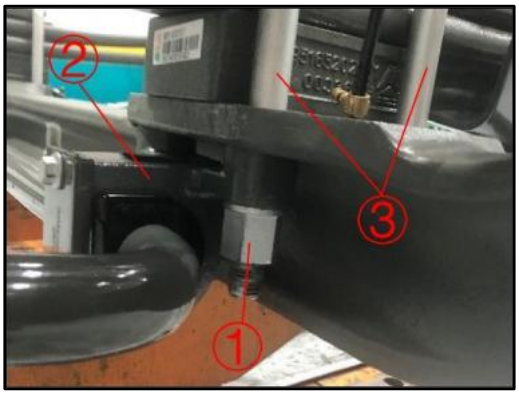

Removal steps

1. When removing the front axle assembly, safety measures should be taken and the front beam should be fixed using double jacks.
2. Use a 30mm sleeve to remove the U-bolt connecting nut ① (M20*2.5); separate the lateral stabilizer bar bracket ② from the U-bolt ③; operate the jack to separate the front axle assembly from the suspension.

Install front axle assembly

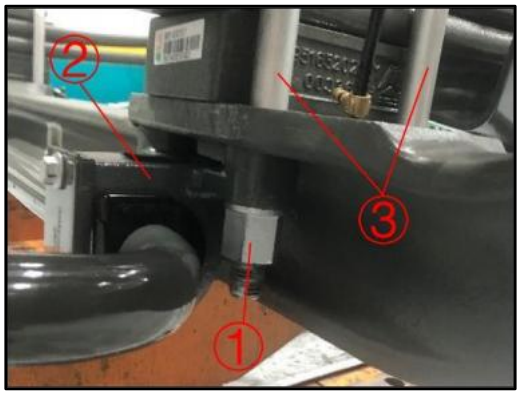

Installation steps

1. Move the front axle assembly to the lower part of the chassis, and use double chain blocks to lift the front beam.

2. Thread the U-bolt ③ through the front beam bolt hole and lateral stabilizer bar bracket ②; apply anti seize lubricant to the threads of the U-bolt, and tighten the U-bolt connecting nut ① (M20*2.5) using a 30mm sleeve, with a torque range of 450 ± 10% Nm and an actuating torque of 450Nm.

Auxiliary material: HQTS H767 high-temperature anti-seize agent

Install air chamber hose

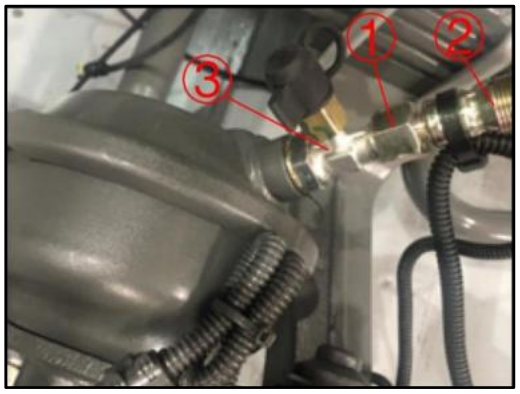

Installation steps

1. Manually connect the brake flexible hose ② to the hose connector ③ screw nut. The hose should be rotated at an angle of approximately 15° towards the chassis side, not the tire side.
2. Tighten the hose connector screw nut ① (M18) using a 19mm sleeve with a torque range of 60±10% Nm and an actuating torque of 60 Nm.

Note: Simultaneously connect the alarm wiring harness connector, ABS wire connector, and test the functionality of the signal circuit.

Install the stabilizer bar fixing clamp

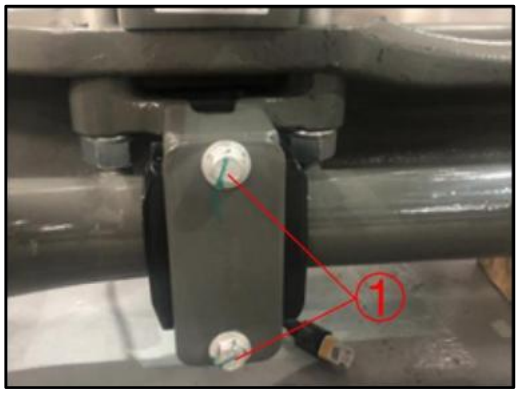

Installation steps

1. Apply threadlocker to the connecting bolt ① thread (M10*30), tighten it using a 13mm sleeve, with a torque range of 65 ± 6Nm and an actuating torque of 65Nm.
Auxiliary material: Loctite 271 threadlocker

Install drag link

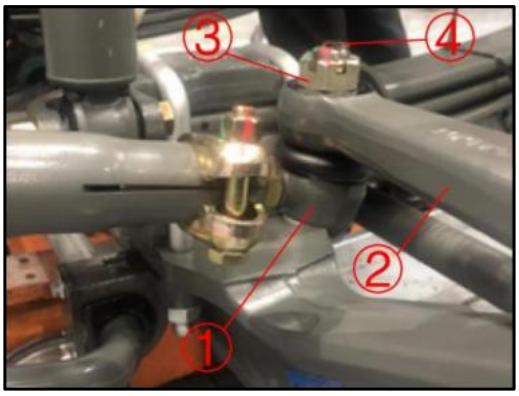

Installation steps

1. Connect the drag link ball joint ① to the steering knuckle arm ②, and tighten the slotted nut (M24) ③ using a 36mm sleeve, with a torque range of 300 ± 10% Nm, and an actuating torque of 300Nm.

2. Insert the split pin (④) through the slotted nut and ball joint using plier, deforming it to lock it in place.

Note: The ball joint head thread should be exposed by at least 3 threads.

Install laser light detection tool

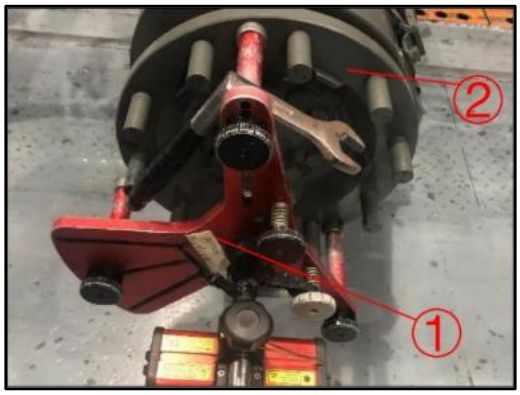

Installation steps

1. Affix the laser light detection tool ① onto the front wheel hub surface ②.

Note: Ensure that the laser light detection tool is parallel to the wheel hub.

Install gauge

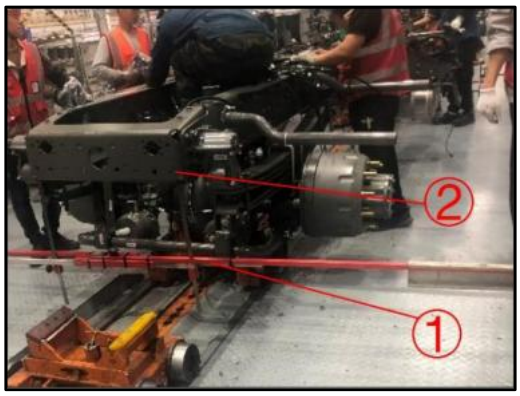

Installation steps

1. Hang gauge ① on the rear of the chassis ② and adjust it to a horizontal position. During the calibration process, ensure that the gauge remains stable.

Note: Ensure that the gauge is parallel to the chassis.

Check the input shaft and housing scale

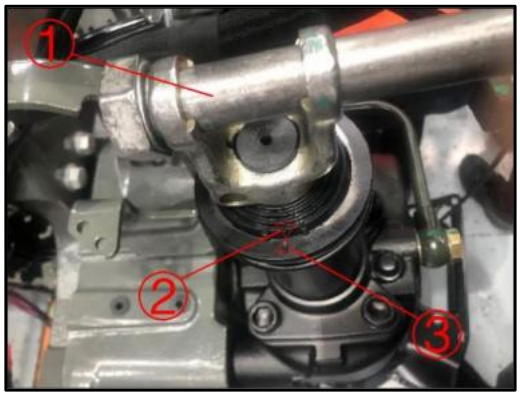

Operational steps

1. Rotate the steering wheel or use adjustment tool ① to align the scale mark ② of steering gear input shaft with the scale mark ③ on the housing, and align the scale mark of the steering rocker arm with the steering gear output scale mark.

Adjust straight alignment

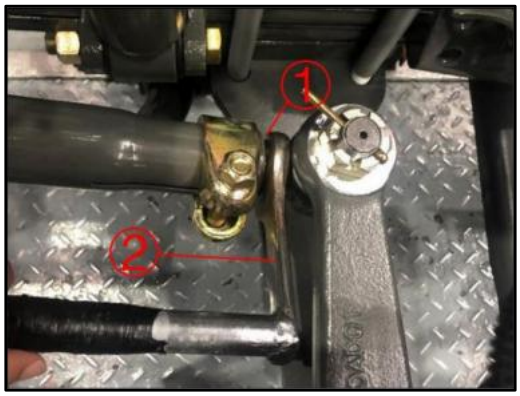

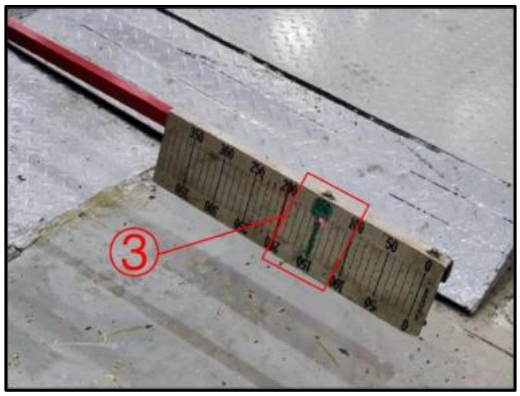

Operational steps

1. Adjust the adjusting nut ① on the drag link using a 34mm open end wrench ②.
2. Observe the scale values ③ of the left and right laser light detection tool lights with the gauge, aiming for a difference of ±2mm between the values of the left and right wheels.

Tighten the drag link

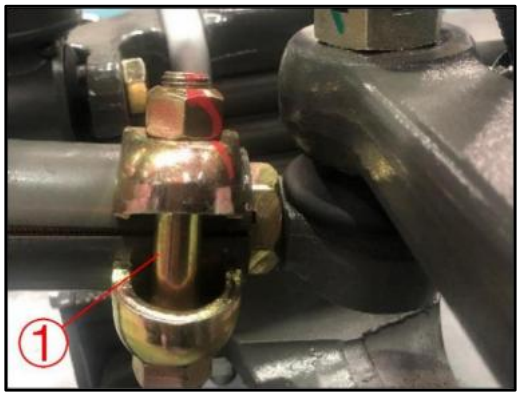

Installation steps

1. Tighten the drag link clamp bolt ① (M14*80) using a 21mm sleeve, with a torque range of 170 ± 10Nm and an actuating torque of 170Nm.

Note: The distance between the clamp and the end of the drag link should be 2-4mm. The clamp must fully cover the threads of the ball joint (connection sleeve). The threads of the clamp bolt should be exposed by at least 3 threads.

Install front tire assembly



Installation steps

1. Install the matching tire onto the front axle assembly, screw the wheel screw nut ② (M22*1.5) onto the wheel bolt ①, and use a 32mm sleeve to symmetrically tighten the wheel nut, with a torque range of 575 ± 25Nm and an actuating torque of 575Nm.

Note: After replacing the driven axle assembly, it is necessary to perform four-wheel alignment again to ensure stable car travel.

Steering operation

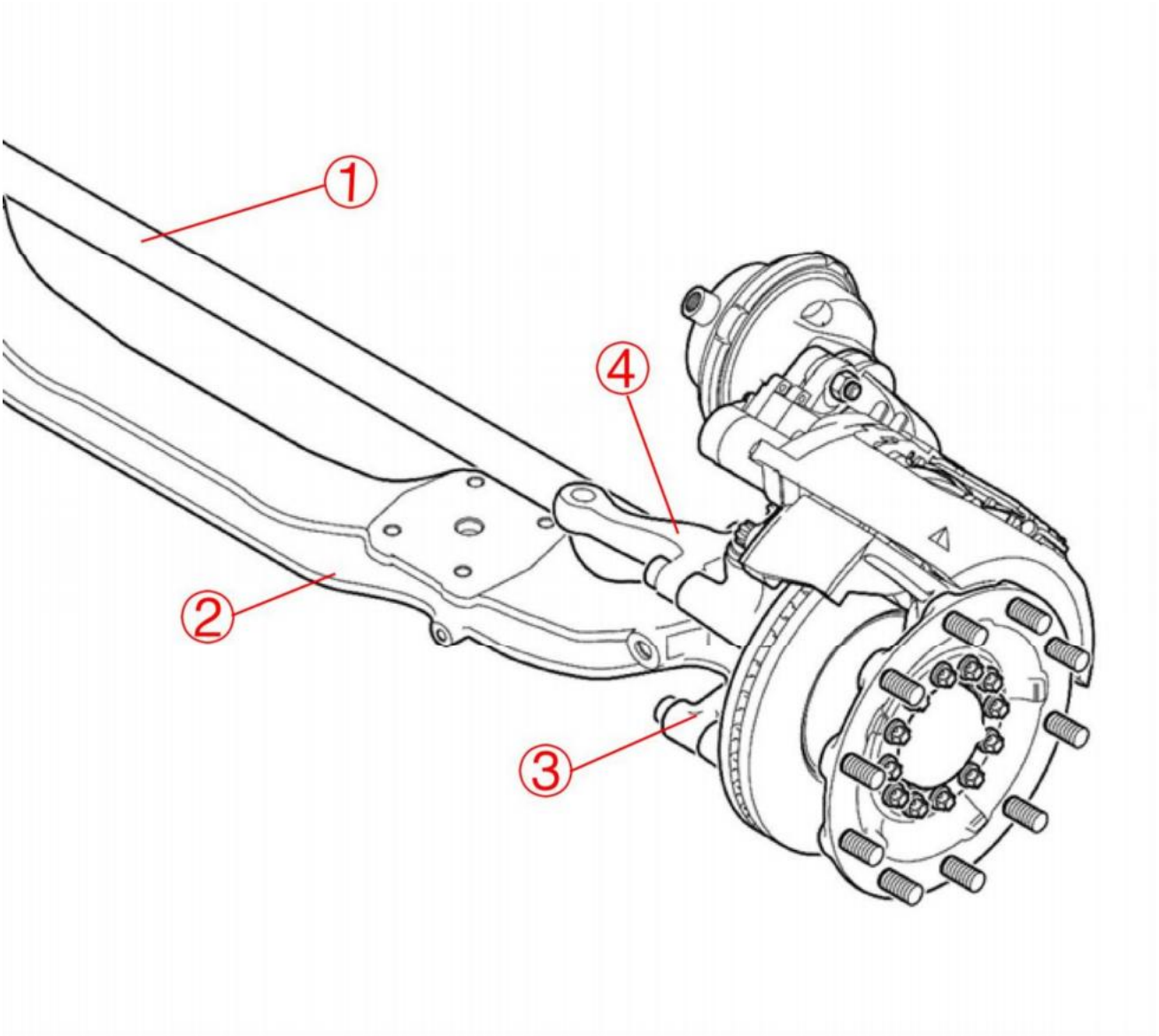

1. Tie rod. 2. Front beam. 3. Tie rod arm. 4. Steering knuckle arm

Remove the tie rod

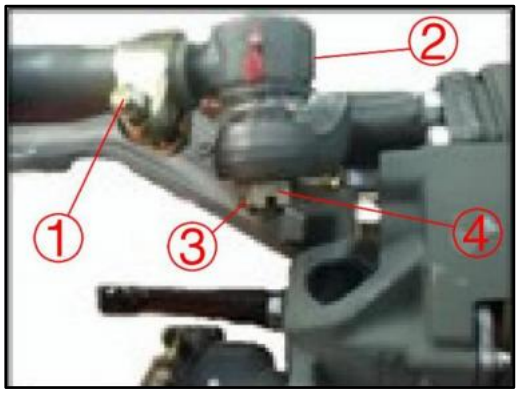

Removal steps

1. Remove the tie rod clamp nut ① using an 18mm sleeve and rotate the tie rod ② to release the toe-in.
2. Restore the deformed locking position of the split pin ③ using pliers and remove the split pin; remove the tie rod connecting slotted nut ④ using an 36mm sleeve and remove the tie rod.

Remove the tie rod arm

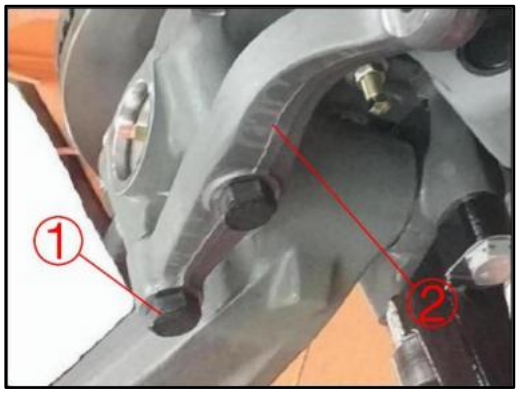

Removal steps

1. Remove the tie rod arm connecting bolt ① (M20*80) using a 30mm sleeve and remove the steering knuckle arm ②.

Remove steering knuckle arm

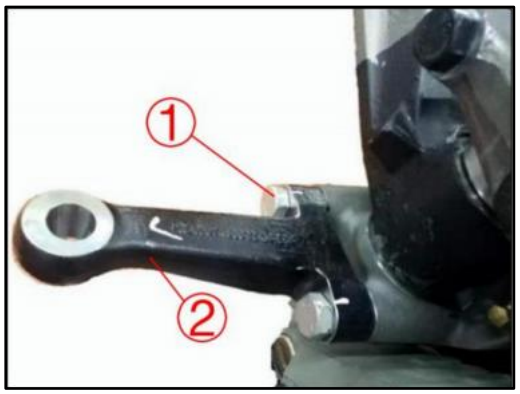

Removal steps

1. Remove connecting bolts for steering knuckle arm ① (M18*65) using a 27mm sleeve and remove the steering knuckle arm ②.

Remove the lock pin

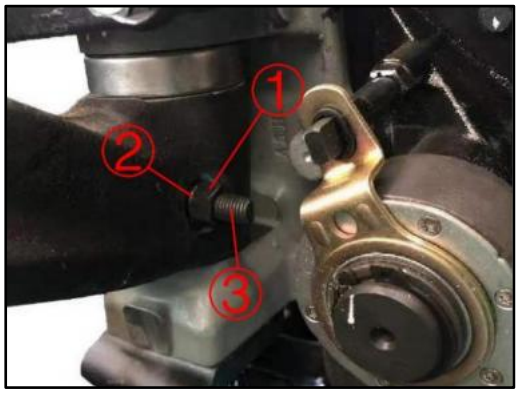

Removal steps

1. Loosen the locknut ① of the lock pin using a 21mm sleeve until it is flush with the thread surface of the lock pin ③. Knock the lock pin using a hammer to release its locking function. Remove the locknut, elastic pad ②, and lock pin from the front beam.

Note: The method for removing the VPD71 and VGD71 lock pins is the same.

Remove the steering stop screw

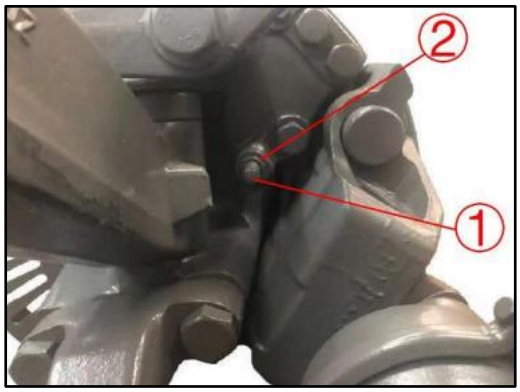

Removal steps

1. Remove the stop screw locknut ② using 19*22mm double ended torque wrench; and remove the stop screw ① using 14mm sleeve.

Remove the upper and lower kingpin cap and sealing ring

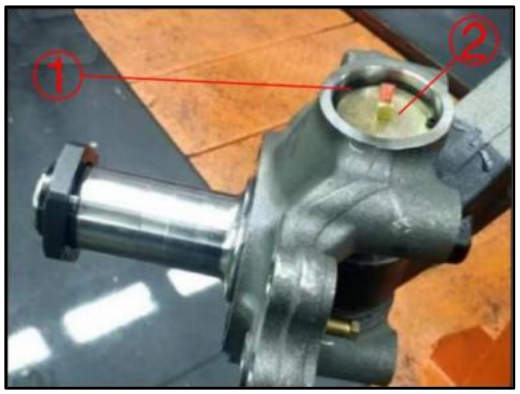

Removal steps

1. Remove the circlip ① from the kingpin hole using internal circlip pliers; and remove kingpin cap ② and sealing ring.

Note: The removal method for the upper and lower kingpin caps is the same.

Remove the kingpin, steering knuckle and thrust bearing

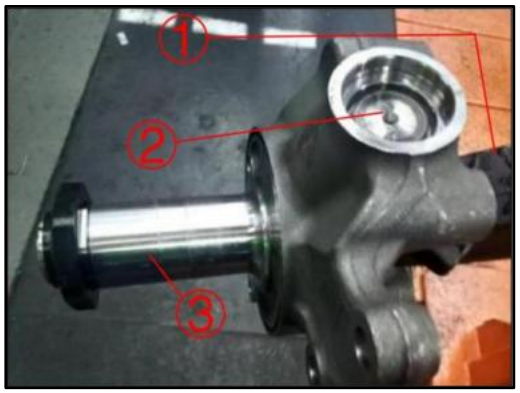

Removal steps

1. Knock the kingpin ② downwards to separate it from the front axle ① and the steering knuckle ③ using an ejector rod and hammer. Remove the thrust bearing and adjusting washer.

Note: Remove the wheel-end components according to *VPD71 Driven Axle - Wheel End*.

Install the steering knuckle

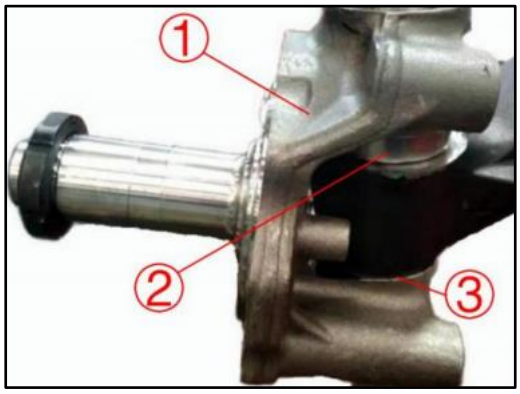

Installation steps

1. Install the steering knuckle ① onto the front beam; Align the steering knuckle, thrust bearing ② with the kingpin channel of the front beam.

2. Install adjusting shims at the connection position ③ between the steering knuckle and the front beam; Measure the gap between the mating faces of the steering knuckle and the front beam using a feeler gauge, with a clearance of 0.01-0.07mm.

Note: When assembling the steering knuckle on the vehicle, the installation direction is opposite.

Install the steering knuckle

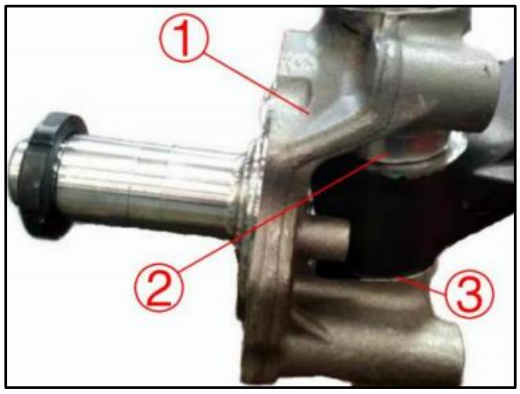

Installation steps

1. Install the steering knuckle ① onto the front beam; Align the steering knuckle, thrust bearing ② with the kingpin channel of the front beam.

2. Install adjusting shims at the connection position ③ between the steering knuckle and the front beam; Measure the gap between the mating faces of the steering knuckle and the front beam using a feeler gauge, with a clearance of 0.01-0.07mm.

Note: When assembling the steering knuckle on the vehicle, the installation direction is opposite.

Install kingpin

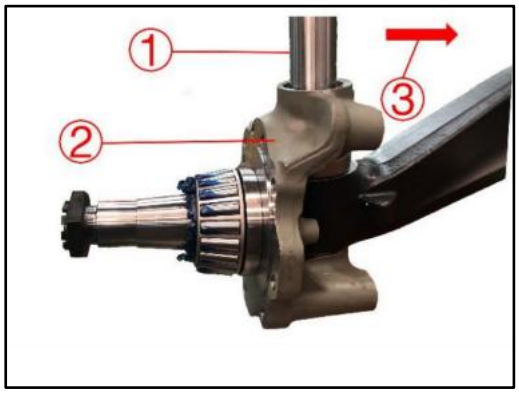

Installation steps

1. Place the side of the kingpin ① with locking groove ③ facing the front beam into the steering knuckle ② pin hole; use a top rod and a hammer to knock the kingpin from bottom to top; stop striking when the kingpin locking groove is aligned with the front beam lock pin hole.

Note: The installation method for VPD71 and VGD71 kingpins is the same.

Install lock pin

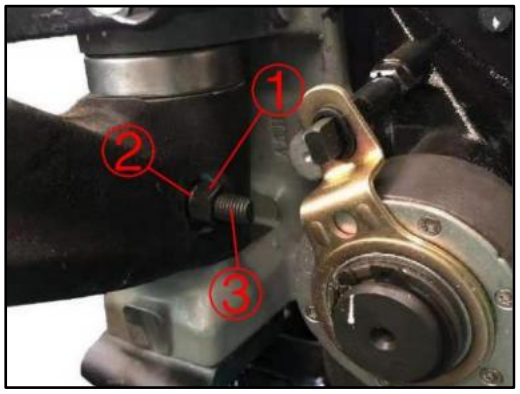

Installation steps

1. Insert the thread end of lock pin ③ through the side where the steering knuckle stop screw is installed (passing through the kingpin locking groove and front beam pin hole).
2. Place the spring washer ② on the lock pin screw rod; tighten the locknut ① using a 21mm sleeve, with a torque range of 90-110Nm and an actuating torque of 100Nm.
3. Measure the steering knuckle rotational resistance torque with an actuating torque of ≤80Nm.

Note: The steering knuckle should rotate flexibly without any looseness or jamming. If there is excessive rotational resistance torque, the kingpin and steering knuckle need to be disassembled and inspected to analyze the cause.

Install sealing ring

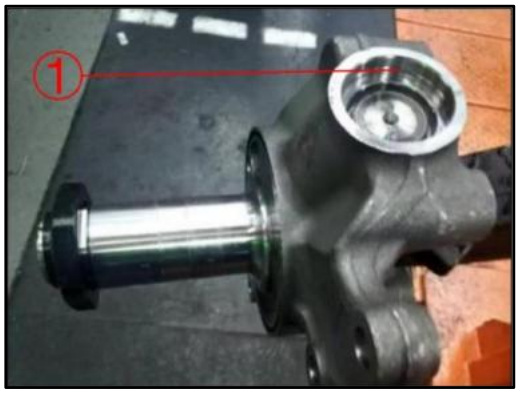

Installation steps

1. Install the sealing ring into the installation hole ① of the steering knuckle sealing ring (the installation method for the upper and lower sealing rings is the same).

Note: Ensure that the sealing ring is installed in place to prevent oil leakage.

Install the upper and lower kingpin caps

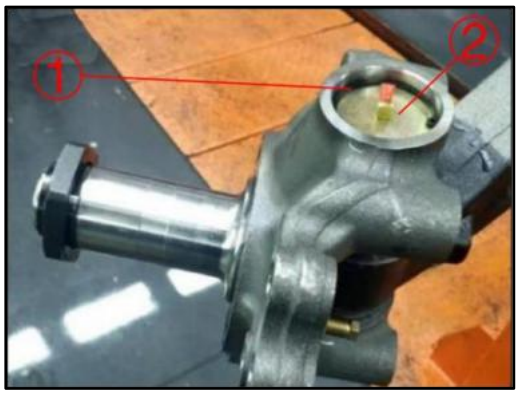

Installation steps

1. Fit the kingpin cap ② with the sealing ring; fix the circlip ① into the circlip groove using internal circlip pliers (the installation method for the upper and lower kingpin caps is the same).
2. Inject lubricating grease into the kingpin cap.
Auxiliary material: Great Wall 2#Lithium base grease

Note: Ensure that the circlip is fully expanded and provides proper positioning.

Install the steering stop screw

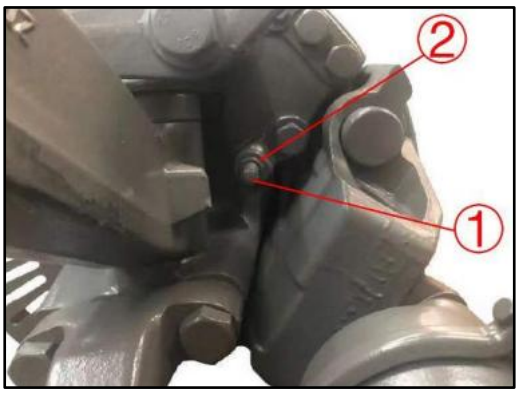

Installation steps

1. Apply threadlocker to the threads of the stop screw ①, then screw the stop screw into the steering knuckle thread using a 14mm sleeve.
2. Fix the angular gauge to the left and right steering knuckles. Two operators observe the reference axis on the angular gauge of the opposite side through the notch. The steering angle should be in the range of 42.5-44.5°, with a actuating angle of 43°.
3. Tighten the locknut ② of the stop screw using a 19*22mm double ended torque wrench. Tightening it is sufficient.

Auxiliary material: Loctite 271 threadlocker

Install tie rod arm

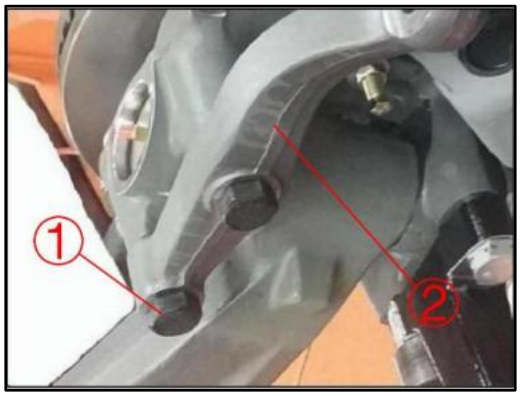

Installation steps

1. Apply threadlocker to the connecting bolt ①, thread the bolt through the tie rod arm ②, and screw it into the steering knuckle thread hole.
2. Tighten the tie rod arm connecting bolt (M20*80) using a 30mm sleeve, with a torque range of 510-620Nm and an actuating torque of 565Nm.

Auxiliary material: Loctite 271 threadlocker

Install steering knuckle arm

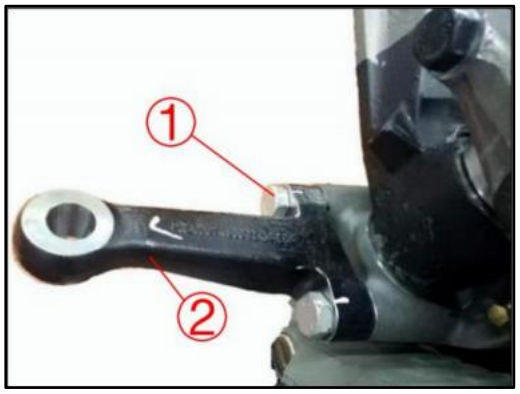

Installation steps

1. Apply threadlocker to the connecting bolt ①. Thread the bolt through the steering knuckle arm ② and screw it into the steering knuckle thread hole.
2. Tighten the connecting bolt ① (M18*65) using a 27mm sleeve, with a torque range of 365-445 Nm and an actuating torque of 405Nm.
Auxiliary material: Loctite 271 threadlocker

Installation direction of steering knuckle arm

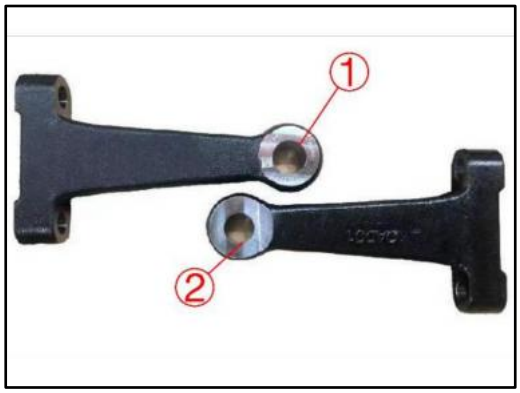

Installation steps

1. Align the smaller end ② of the tapered hole on the steering knuckle arm towards the air chamber, and the larger end ① of the tapered hole towards the front beam.

Install the tie rod

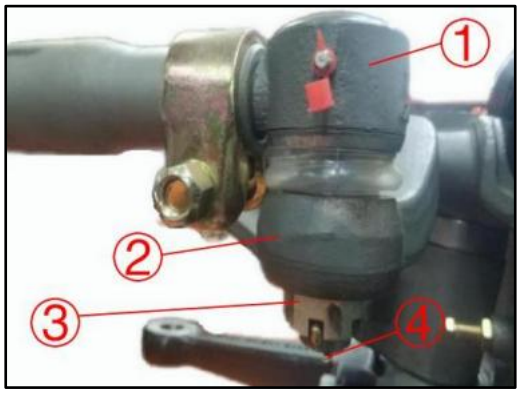

Installation steps

1. Connect the tie rod ball joint ① to the tie rod arm ②. Tighten the tie rod connecting nut ③ using 36mm sleeve, with a torque range of 238-322Nm and an actuating torque of 280Nm.
2. Insert the split pin ④ into the slot of the locking nut and pass it through the tie rod ball joint. Deform and lock the split pin using plier.

Adjust the toe-in (length)

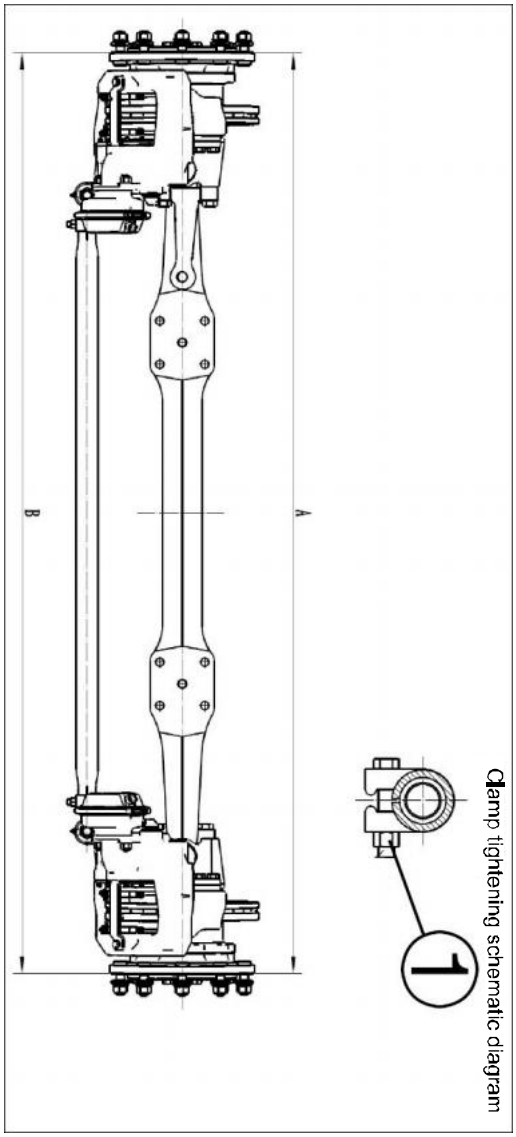

Operational steps

1. Install the toe-in laser measuring instrument on the bolts of the left and right wheels. Adjust the tie rod end ball joints until the toe-in falls within the required range. The actuating toe-in shall be B-A=1±0.5mm/m.
2. Adjust the position of the clamp. The distance from the outer edge of the clamping sleeve to the end face of the tie rod thread should be 9 ±1mm. Tighten the clamp nut ① on both ends of the tie rod using an 18mm sleeve, with a torque range of 110-130Nm and an actuating torque of 120Nm.
3. Apply grease to the tie rod ball joint.
Auxiliary material: Great Wall 2#Lithium base grease

Note: The exposed thread lengths of the axle head pins on both sides of the tie rod should be approximately equal, with a difference in thread length between left and right not exceeding 4mm.

Wheel end

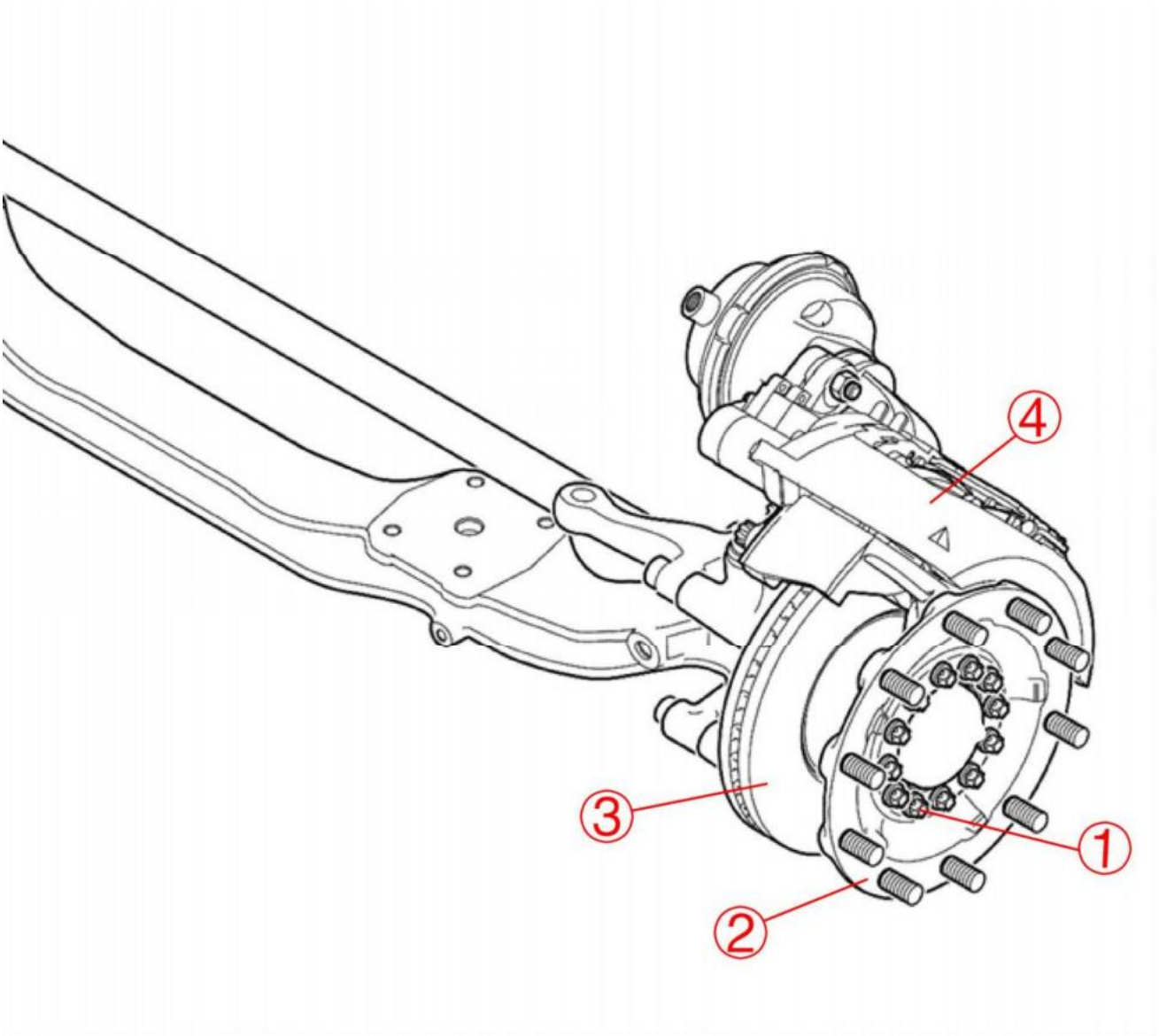

1. Front wheel flange connecting bolt. 2. Front wheel flange. 3. Brake disc. 4. Brake

Remove brake lining pressing plate

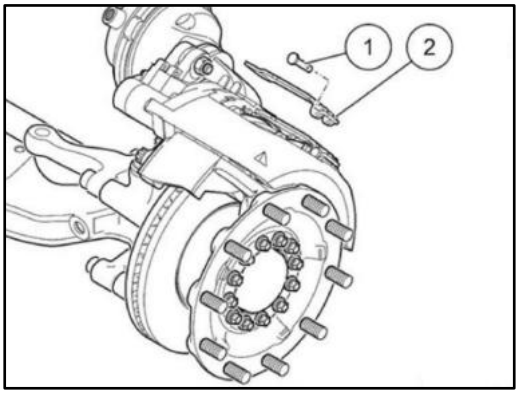

Removal steps

1. Remove the brake lining pressing plate bolt ① (M12*25) using an 18mm sleeve; remove the brake lining pressing plate ②.

Remove brake lining

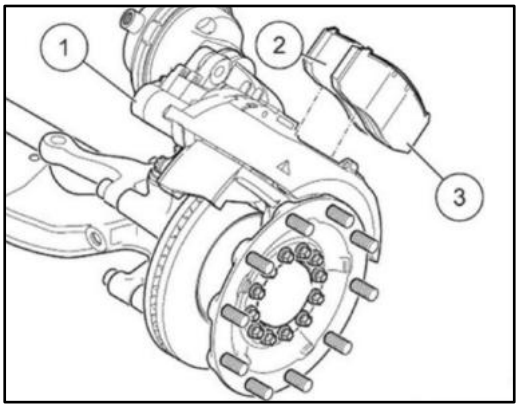

Removal steps

1. Remove the brake lining ②③ from the brake ①; inspect the condition of the brake lining for wear.

Note: If the brake lining cannot be removed, adjust the manual adjusting shaft to increase the clearance between the brake linings. If the thickness of the brake disc is less than 11mm, replace all four brake linings on both sides of the brake simultaneously.

Remove the tie rod arm

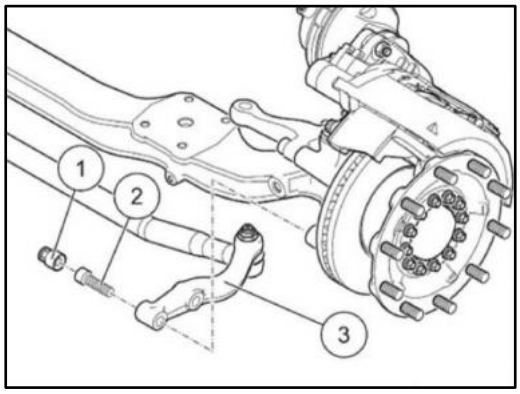

Removal steps

1. Remove the steering knuckle arm connecting bolt ② (M20*80) using a 30mm sleeve ①; remove the tie rod arm ③.

Remove brake chamber

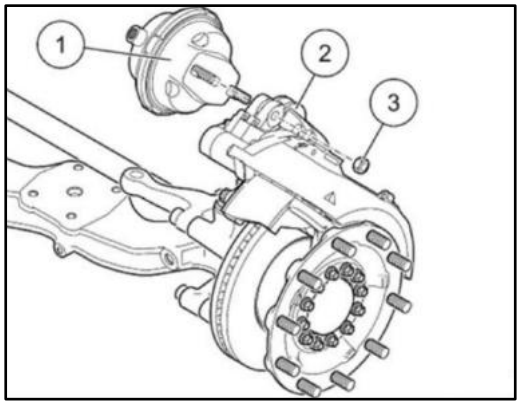

Removal steps

1. Remove the brake chamber connecting nut ③ from brake ② using a 24mm sleeve; remove the brake chamber ① and spring washer.

Remove the brake

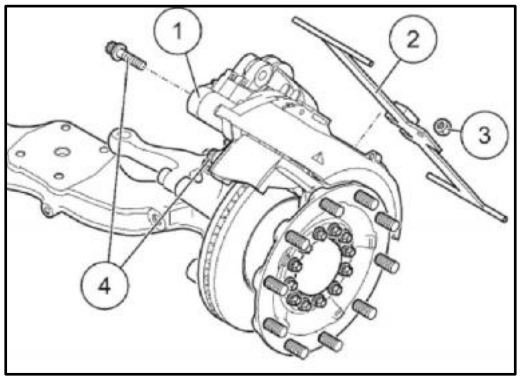

Removal steps

1. Install auxiliary tool ② onto brake ① using screw nut ③.
2. Remove the brake connecting bolt ④ (M18 * 55) using a 27mm sleeve; lift down the brake ① using auxiliary tool; remove the auxiliary tool ②.

Remove front wheel flange

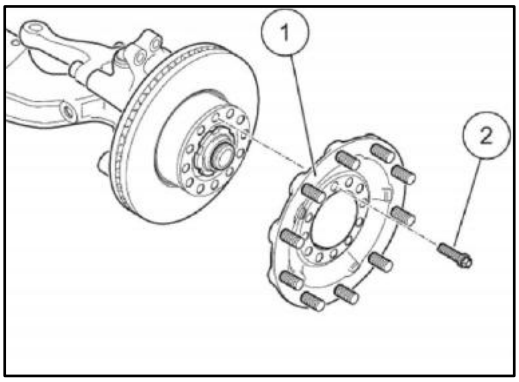

Removal steps

1. Remove the front wheel flange connecting bolt ② (M16*70) using a 24mm sleeve; remove the front wheel flange ①.

Note: If only the front wheel flange is being replaced, it can be done directly without removing the brake.

Remove brake disc

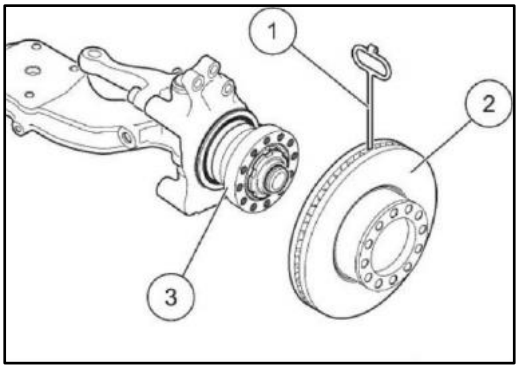

Removal steps

1. Lift the brake disc ② using a lifting hook ① and remove it from the bearing unit③.

Note: If the thickness of the brake disc is less than 37mm, it needs to be replaced.

Remove the bearing unit

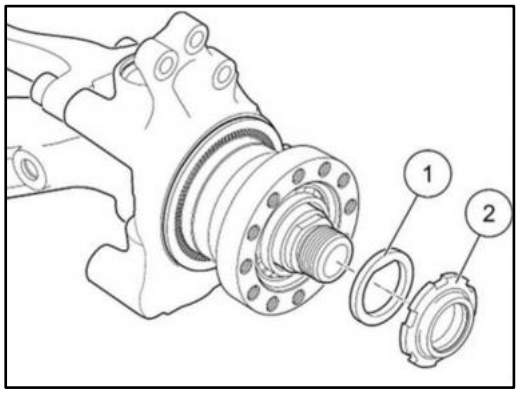

Removal steps

1. Restore the "concavity" on the axle head locking nut ② using a chisel, then remove the axle head locking nut using a special socket tool.
2. Remove the thrust washer ①, and then remove the bearing unit.

Remove the guide sleeve

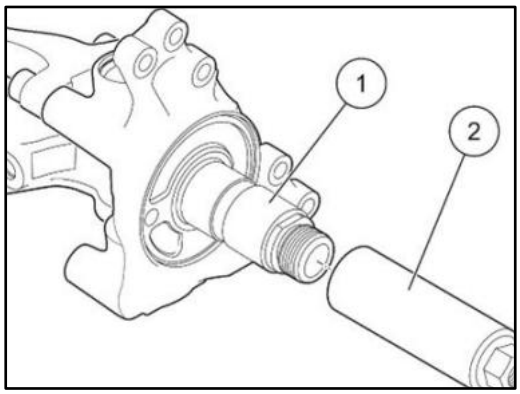

Installation steps

1. Install the guide sleeve ② into the locking nut thread of the steering knuckle axle head
2. Apply a uniform coating of high-efficiency grease to the contact surface ① between the axle head and the wheel hub bearing using a soft foam block. Push the bearing unit into the root of the steering knuckle axle head using the guide cylinder.

Auxiliary materials: SKF LGAF 3E high-efficiency grease, soft foam block.

Install bearing unit

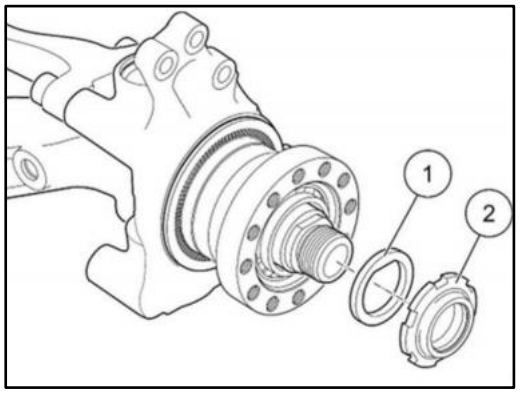

Installation steps

1. Push the bearing unit into the root of the steering knuckle axle head using the guide cylinder, and then remove the guide sleeve; Install the thrust washer ① and locking nut ② onto the steering knuckle axle head in sequence.
2. Tighten the locking nut using a special tool, with a torque range of 740 ± 74Nm and an actuating torque of 740Nm.
3. Knock the locking nut ② using a hammer and chisel at the notch on the axle head to create a "concavity" locking position. Ensure that there are no cracks at the locking location.

Install the brake disc

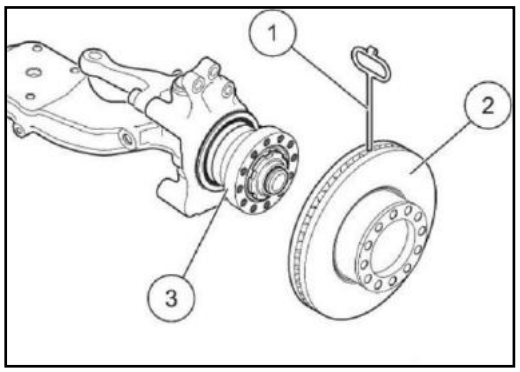

Installation steps

1. Lift the brake disc ② using hook and place it on the bearing unit ③; align the bolt holes.

Install front wheel flange

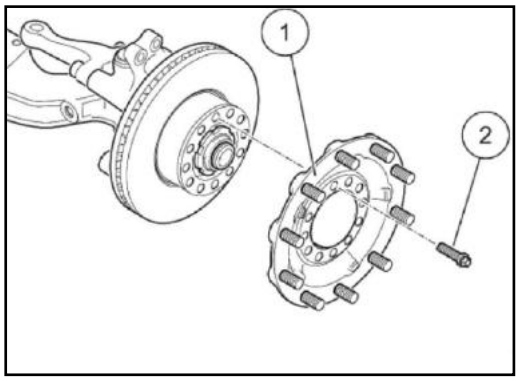

Installation steps

1. Apply threadlocker to the thread of the connecting bolt (M16 * 70); thread the bolt through the front wheel flange and brake disc bolt hole, and screw it into the bearing unit thread hole.
2. Symmetrically tighten the connecting bolt using a 24mm sleeve, with a torque range of 297-363 Nm and an actuating torque of 330Nm.
Auxiliary material: Loctite 271 threadlocker

Install the brake

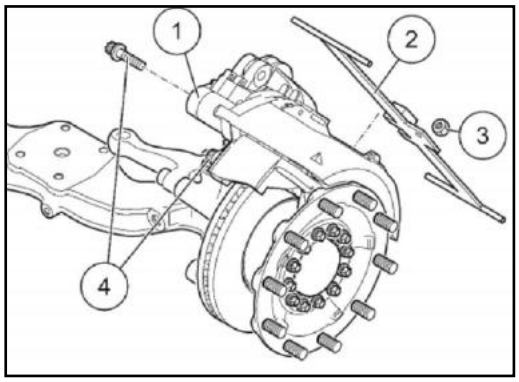

Tightening order

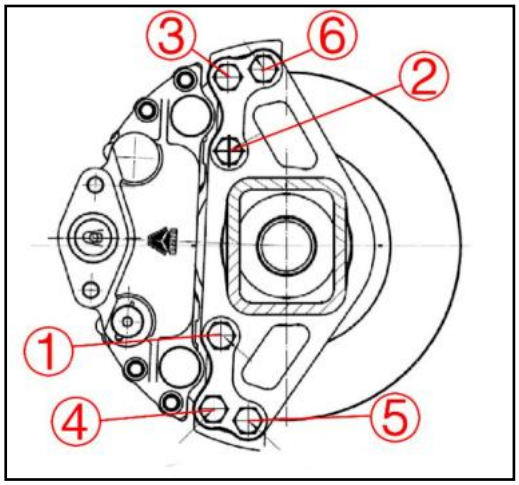

Installation steps

1. Install auxiliary tool ② onto brake ①.
2. Apply threadlocker to the threads of the connecting bolts; tighten the brake connecting bolt ④ (M18 * 55) using a 27mm sleeve, with a torque range of 365-445Nm and an actuating torque of 405Nm.

Auxiliary material: Loctite 271 threadlocker

Operational steps

Note: Tighten the components in the order of ①, ②, ③, ④, ⑤, ⑥.

Install brake chamber

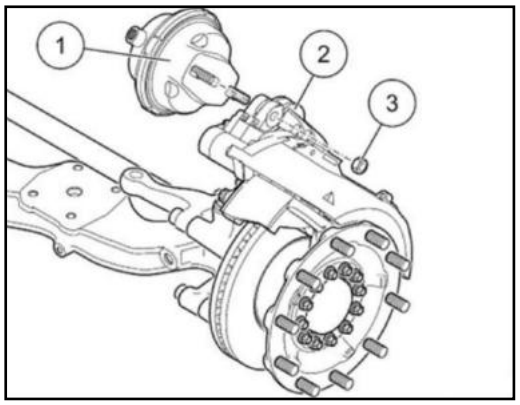

Installation steps

1. Install the brake chamber ① onto the brake ② along the indicated route; apply an appropriate amount of threadlocker to the air chamber screw rod.

2. Install the spring washer and nut ③ onto the air chamber screw rod in sequence, tighten the screw nut using a 24mm sleeve, with a torque range of 200 ± 10Nm and an actuating torque of 200Nm.

Auxiliary material: Loctite 243 threadlocker

Note: Install the air chamber air circuit interface facing upwards onto the brake.

Install tie rod arm

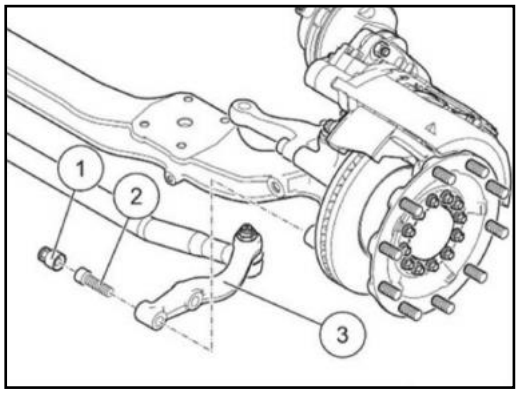

Installation steps

1. Apply threadlocker to the connecting bolt ②, thread the bolt through the tie rod arm ③, and screw it into the steering knuckle thread hole.
2. Tighten the tie rod arm connecting bolt ② (M22*80) using a 30mm sleeve ①, with a torque range of 510-620Nm and an actuating torque of 565Nm.

Auxiliary material: Loctite 271 threadlocker

Note: When removing and installing the tie rod arm, the toe-in needs to be readjusted. Please refer to the *VPD71S Driven Axle - Steering Operation*.

Install the brake lining

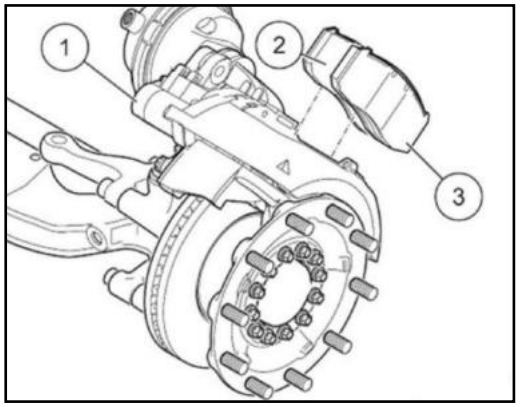

Installation steps

1. Install the brake linings ②③ into the brake ①. Ensure that the friction surface of the brake lining faces towards the brake disc.

Install brake lining pressing plate

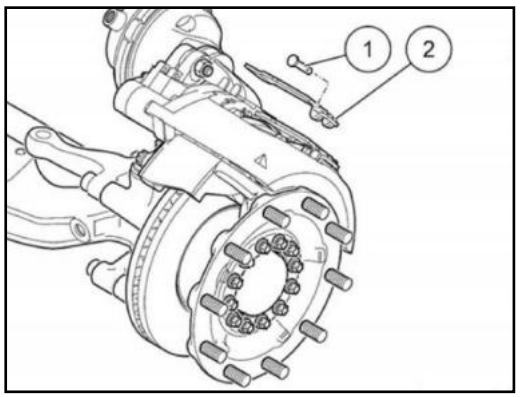

Installation steps

1. Apply threadlocker to the bolt ①. Thread the bolt through the brake lining pressing plate ② and install it onto the brake following the indicated route.
2. Tighten the bolt ① (M12*25) using an 18mm sleeve, with a torque range of 40±5Nm and actuating torque of 40Nm.
Auxiliary material: Loctite 243 threadlocker

Adjust the brake clearance

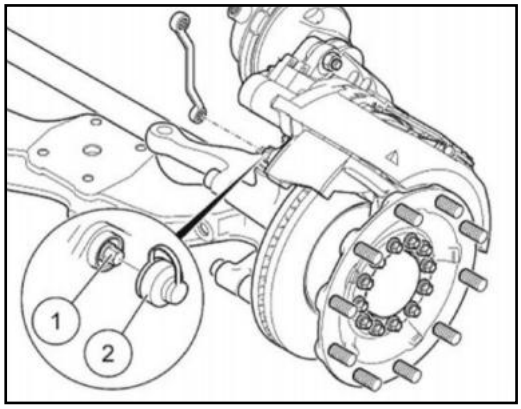

Operational steps

1. Push the caliper body inward by hand to concentrate the brake clearance to the inside.
2. Open the protection cap ② and adjust the manual adjusting shaft ① using a tooling (clockwise to decrease the brake clearance; counterclockwise to increase the brake clearance).
3. Choose the appropriate feeler gauges thickness and insert it between the brake lining and the brake disc. Measure the initial brake clearance. If the clearance is too large or too small, adjust the manual adjusting shaft ① until the initial clearance is within the acceptable range of 1.7-2.3mm.
4. Close the protection cap ② to ensure cleanliness inside the brake.

Note: When adjusting, start by increasing the initial clearance to prevent the manual adjusting shaft from getting stuck at the extreme position.

Braking

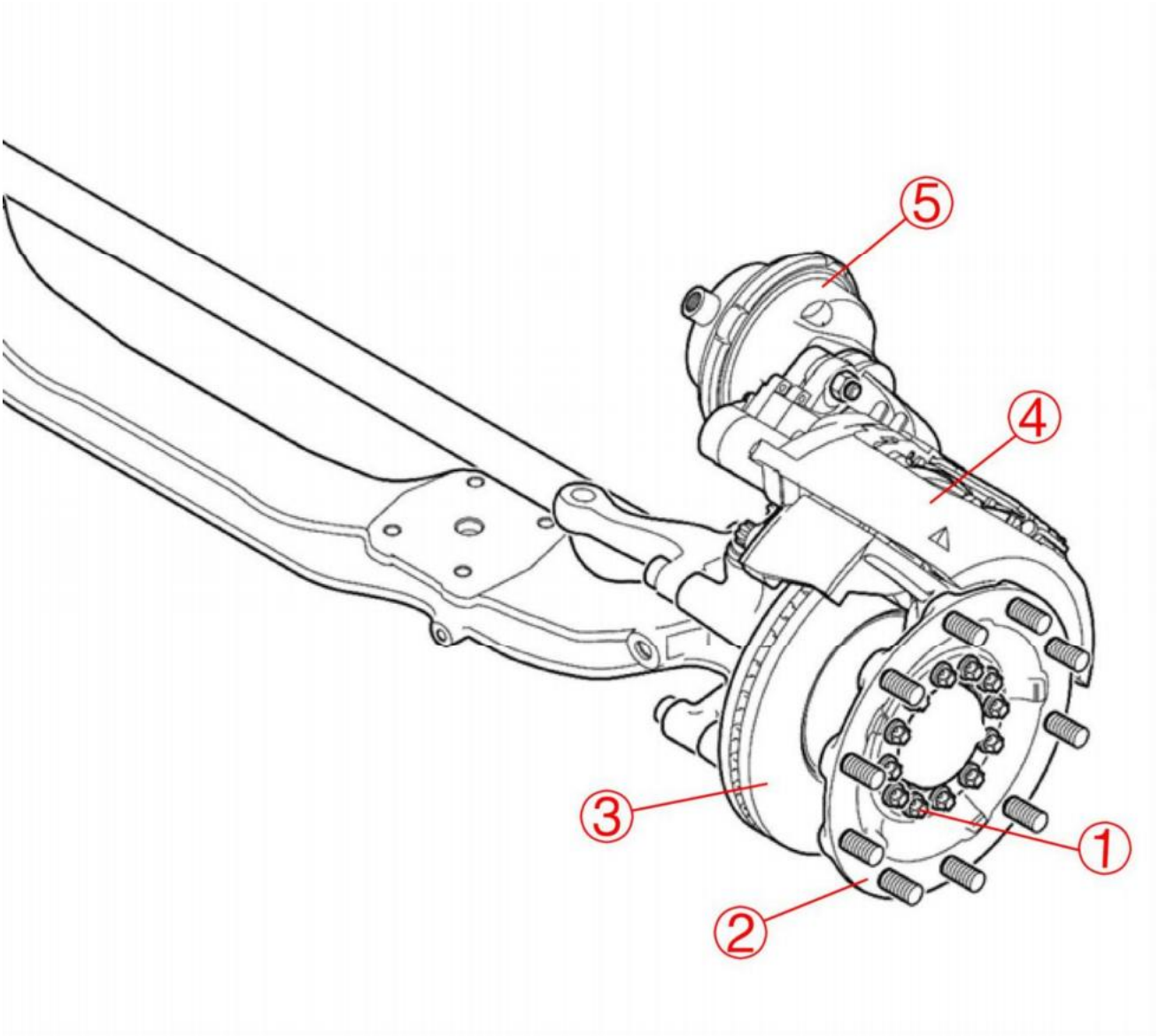

1. Front wheel flange connecting bolt. 2. Front wheel flange. 3. Brake disc. 4. Brake. 5. Brake chamber

Remove brake lining pressing plate

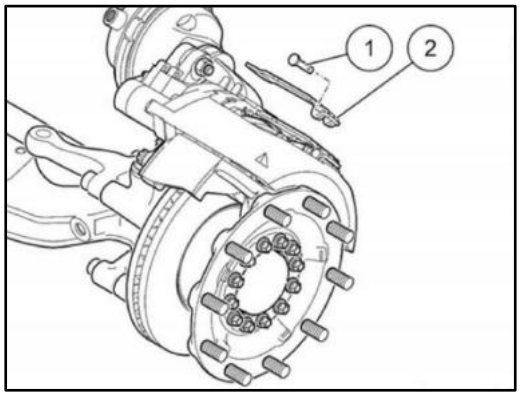

Removal steps

1. Remove the brake lining pressing plate bolt ① (M12*25) using an 18mm sleeve; remove the brake lining pressing plate ②.

Remove brake lining

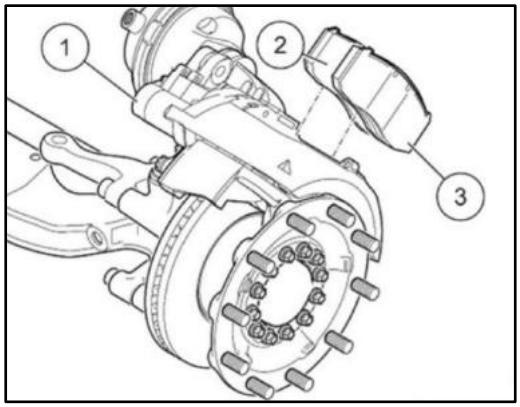

Removal steps

1. Remove the brake lining ②③ from the brake ①; inspect the condition of the brake lining for wear.

Note: If the brake lining cannot be removed, adjust the manual adjusting shaft to increase the clearance between the brake linings. If the thickness of the brake disc is less than 11mm, replace all four brake linings on both sides of the brake simultaneously.

Remove the tie rod arm

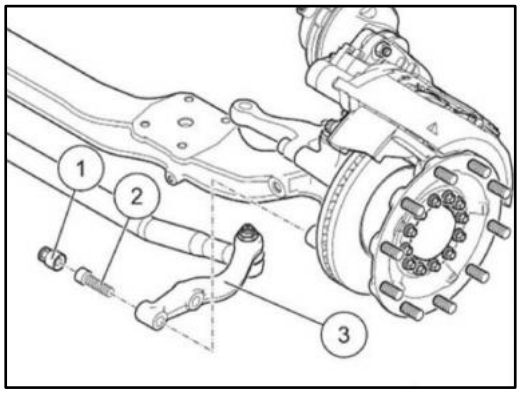

Removal steps

1. Remove the steering knuckle arm connecting bolt ① (M20*80) using a 30mm sleeve and remove the tie rod arm ②.

Remove brake chamber

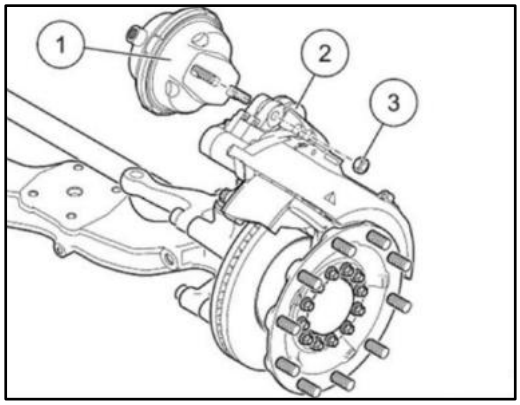

Removal steps

1. Remove the brake chamber connecting nut ③ from brake ② using a 24mm sleeve; remove the brake chamber ① and spring washer.

Remove the brake

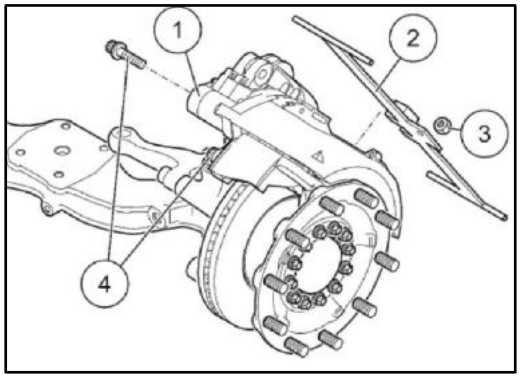

Removal steps

1. Install auxiliary tool ② onto brake ① using screw nut ③.
2. Remove the brake connecting bolt ④ (M18 * 55) using a 27mm sleeve; lift down the brake ① using auxiliary tool; remove the auxiliary tool ②.

Remove front wheel flange

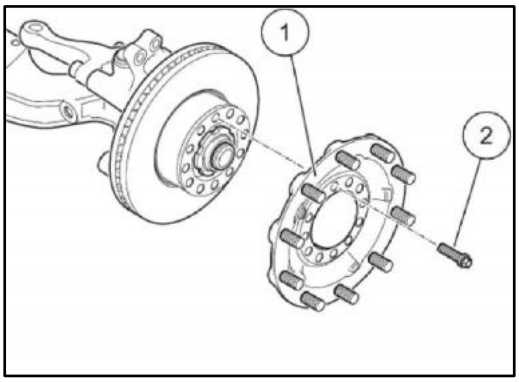

Removal steps

1. Remove the front wheel flange connecting bolt ② (M16*70) using a 24mm sleeve; remove the front wheel flange ①.

Note: If only the front wheel flange is being replaced, it can be done directly without removing the brake.

Remove brake disc

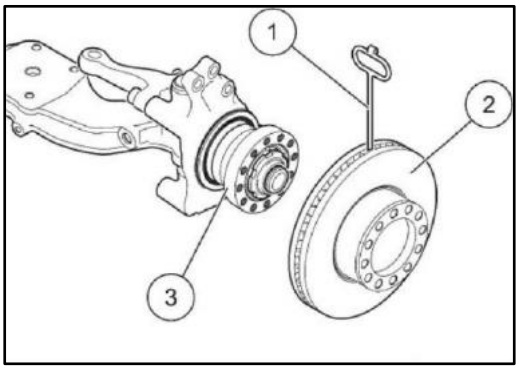

Removal steps

1. Lift the brake disc ② using a lifting hook ① and remove it from the bearing unit③.

Note: If the thickness of the brake disc is less than 37mm, it needs to be replaced.

Install the brake disc

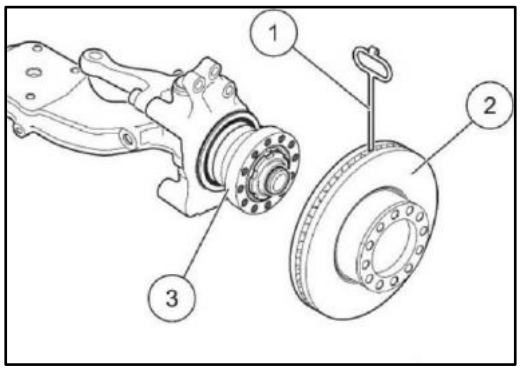

Installation steps

1. Lift the brake disc ② using hook and place it on the bearing unit ③; align the bolt holes.

Install front wheel flange

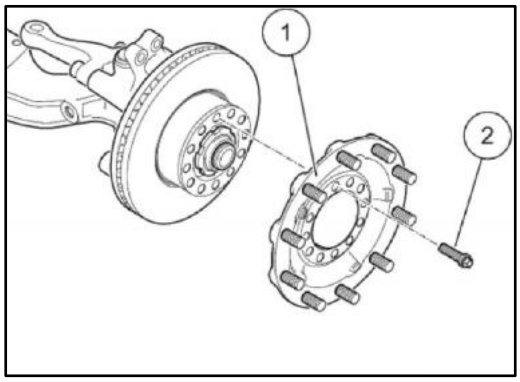

Installation steps

1. Apply threadlocker to the threads of the connecting bolt ② (M16*70). Thread the bolt through the front wheel flange and the brake disc bolt hole, then tighten it into the thread hole of the bearing unit.
2. Symmetrically tighten the connecting bolt using a 24mm sleeve, with a torque range of 297-363Nm and an actuating torque of 330Nm.
Auxiliary material: Loctite 271 threadlocker

Install the brake

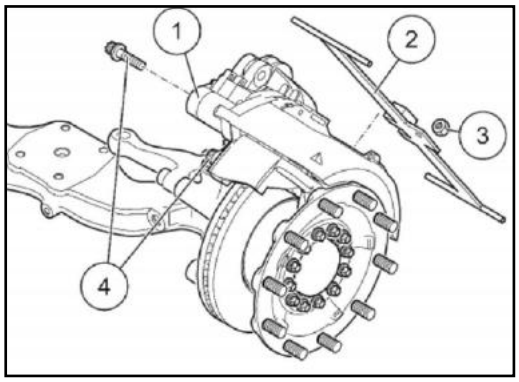

Tightening order

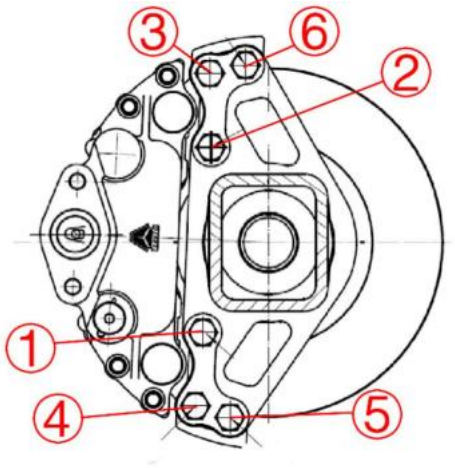

Installation steps

1. Install auxiliary tool ② onto brake ①.
2. Apply threadlocker to the threads of the connecting bolts; tighten the brake connecting bolt ④ (M18 * 55) using a 27mm sleeve, with a torque range of 365-445Nm and an actuating torque of 405Nm.

Auxiliary material: Loctite 271 threadlocker

Operational steps

Note: Tighten the components in the order of ①, ②, ③, ④, ⑤, ⑥.

Install brake chamber

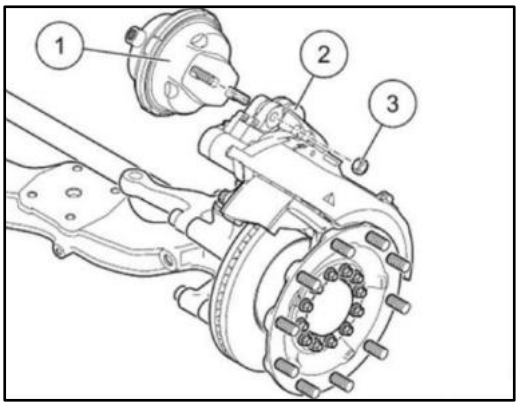

Installation steps

1. Install the brake chamber ① onto the brake along the indicated route; apply an appropriate amount of threadlocker to the air chamber screw rod.

2. Install the spring washer and screw nut ② onto the air chamber screw rod in sequence, tighten the screw nut using a 24mm sleeve, with a torque range of 200 ± 10Nm and an actuating torque of 200Nm.

Auxiliary material: Loctite 243 threadlocker

Note: Install the air chamber air circuit interface facing upwards onto the brake.

Install tie rod arm

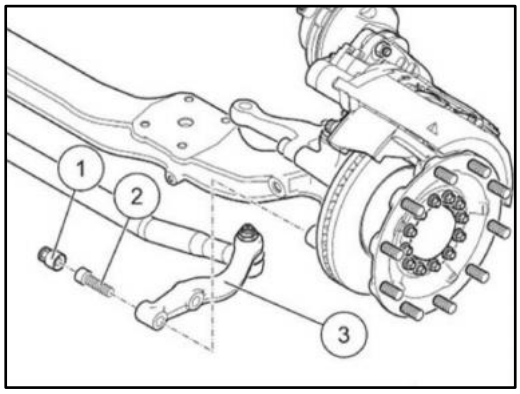

Installation steps

1. Apply threadlocker to the connecting bolt ②, thread the bolt through the tie rod arm ③, and screw it into the steering knuckle thread hole.
2. Use a 30mm sleeve ② to tighten the tie rod arm connecting bolt (M20*80), with a torque range of 510-620Nm and an actuating torque of 565Nm.

Auxiliary material: Loctite 271 threadlocker

Note: When removing and installing the tie rod arm, the toe-in needs to be readjusted. Please refer to the *VPD71S Driven Axle - Steering Operation*.

Install the brake lining

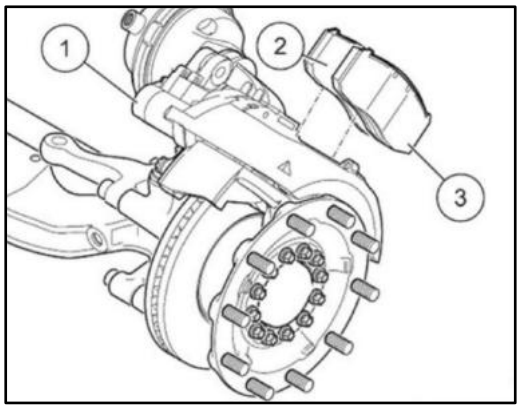

Installation steps

1. Install the brake linings ②③ into the brake ①. Ensure that the friction surface of the brake lining faces towards the brake disc.

Install brake lining pressing plate

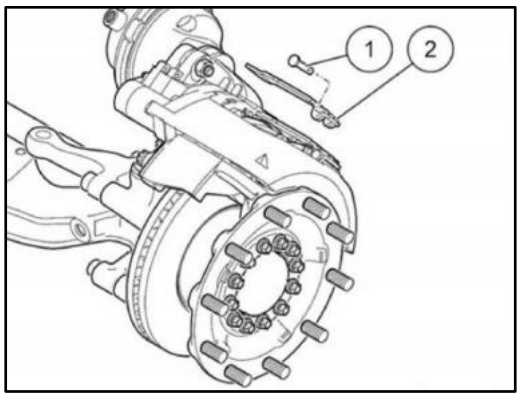

Installation steps

1. Apply threadlocker to the bolt ①. Thread the bolt through the brake lining pressing plate ② and install it onto the brake following the indicated route.
2. Tighten the bolt ① (M12*25) using an 18mm sleeve, with a torque range of 40±5Nm and actuating torque of 40Nm.
Auxiliary material: Loctite 243 threadlocker

Adjust the brake clearance

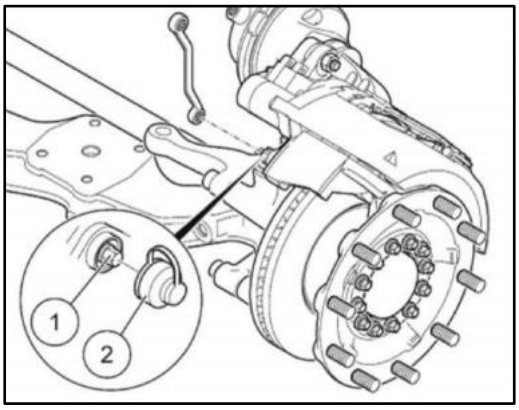

Operational steps

1. Push the caliper body inward by hand to concentrate the brake clearance to the inside.
2. Open the protection cap ② and adjust the manual adjusting shaft ① using a tooling (clockwise to decrease the brake clearance; counterclockwise to increase the brake clearance).
3. Choose the appropriate feeler gauges thickness and insert it between the brake lining and the brake disc. Measure the initial brake clearance. If the clearance is too large or too small, adjust the manual adjusting shaft ① until the initial clearance is within the acceptable range of 1.7-2.3mm.
4. Close the protection cap ② to ensure cleanliness inside the brake.

Note: When adjusting, start by increasing the initial clearance to prevent the manual adjusting shaft from getting stuck at the extreme position.

Remove brake lining

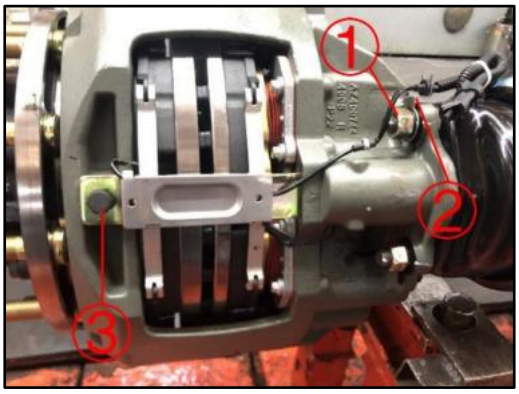

Removal steps

1. Remove the internal and external connectors of the alarm wiring harness; loosen the air chamber connecting nut ① using a 24mm sleeve, remove the alarm wiring harness end clamp ②, elastic pad, and the connecting nut.
2. Loosen the brake lining pressing plate nut ③ using an 18mm sleeve, and pull out the brake lining along with the inner line of the wear alarm from the brake caliper.

Remove alarm wiring harness

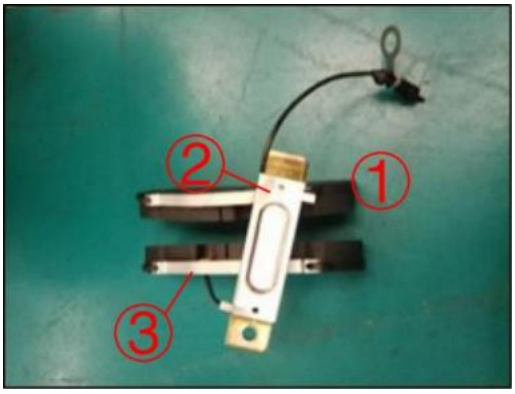

Removal steps

1. Remove the brake lining pressing plate ① from the wear alarm cover plate ②. Remove the brake lining spring leaf ③ and remove the inner wire head of the wear alarm from the brake lining fixing groove.

Install alarm wiring harness



Installation steps

1. Install the new friction wear alarm inner wire head ① into the brake lining fixing groove ②, and reset the brake lining spring leaf. Insert the brake lining pressing plate into the wear alarm cover plate.

Install the brake lining

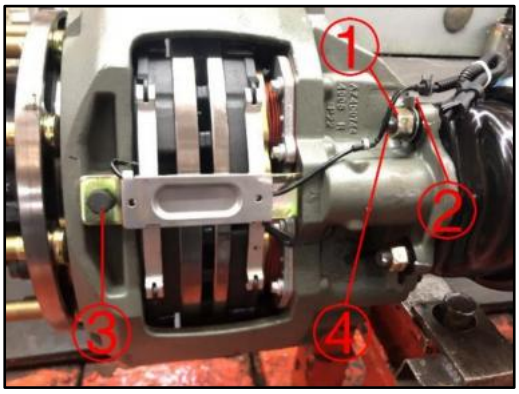

Installation steps

1. Insert the assembled brake lining into the brake caliper. Apply threadlocker to the pressing plate bolt ③. Thread the brake lining pressing plate bolt (M12*25) through the pressing plate and tighten it into the thread of the brake using an 18mm sleeve, with torque range of 40±5Nm and actuating torque of 40Nm.
2. Apply threadlocker to the brake chamber screw rod ④. Thread the alarm wiring harness end clamp ② through the brake chamber screw rod and connect the inner and outer wire connectors. Install the elastic pad and the connecting nut ②. Tighten the air chamber connecting nut ① using a 24mm sleeve, with a torque range of 200 ± 10Nm and an actuating torque of 200Nm.

Auxiliary material: Loctite 243 threadlocker

Note: After replacing the brake lining, it is necessary to re-measure the initial clearance, with an actuating clearance of 1.7-2.3mm.

MCY13 Middle drive axle

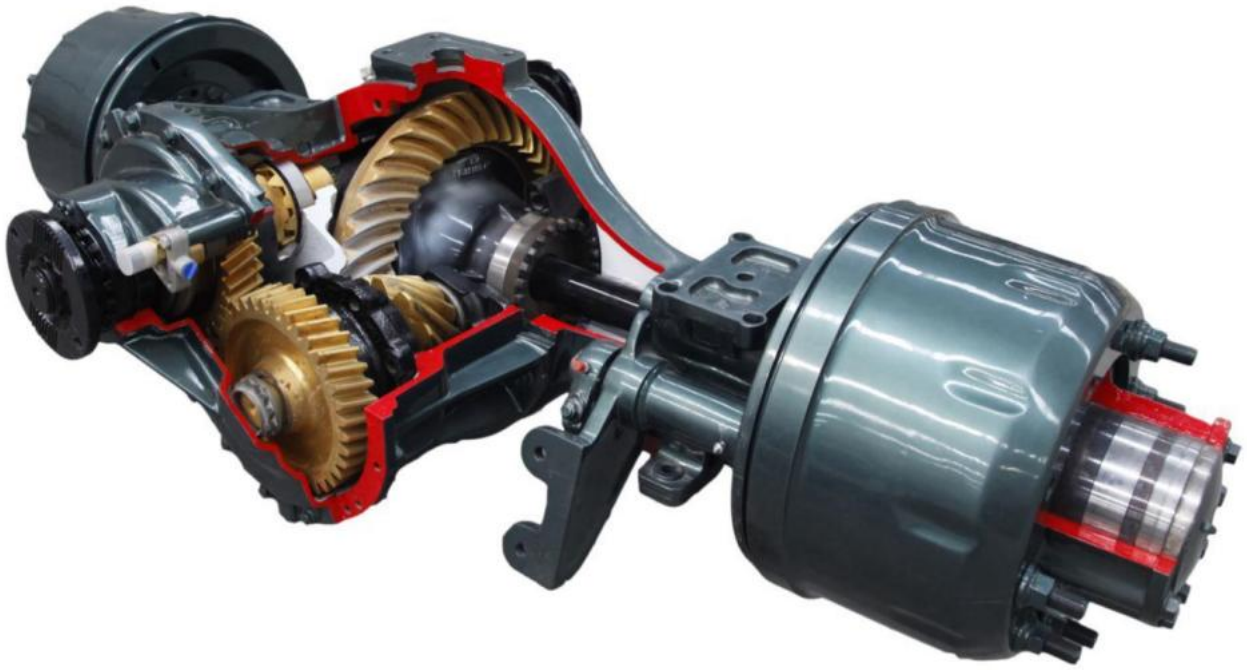

SINOTRUK INTERNATIONAL

After-sales Service Department

Contents

Final drive and differential.....1

Drum-type wheel end.....22

Drum-type brake.....40

Disc wheel end.....64

Disc brake.....76

Others.....93

Final drive and differential

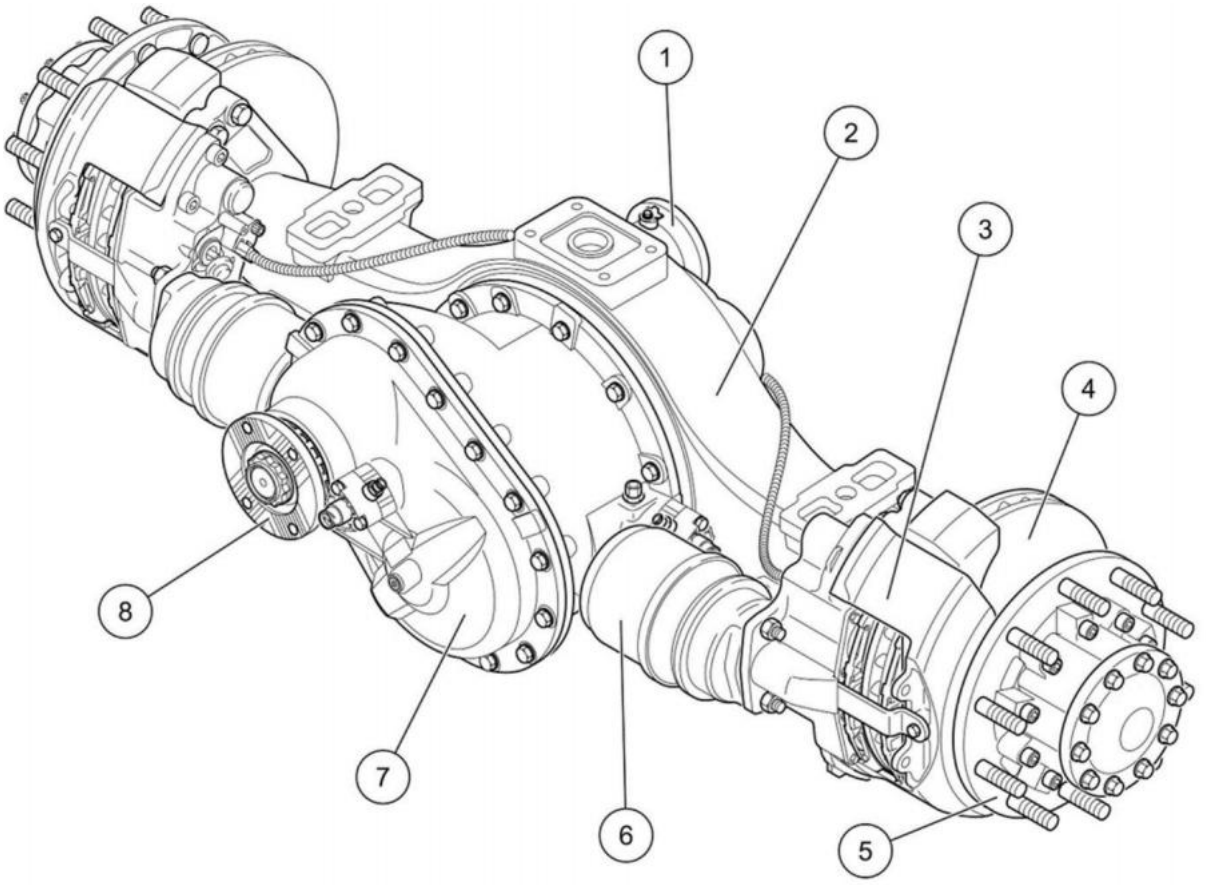

1. Through shaft 2. Axle housing 3. Brake 4. Brake disc 5. Wheel hub 6. Air chamber 7. Intermediate final drive 8. Input flange

Remove the intermediate final drive assembly

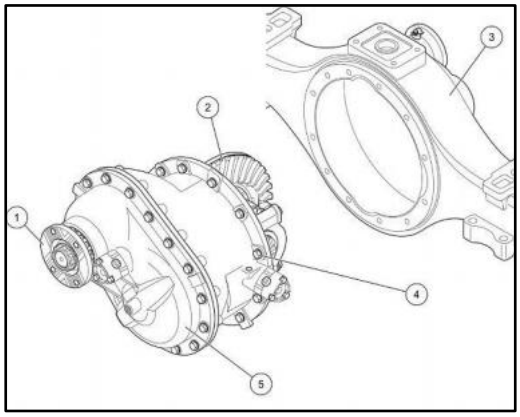

Removal steps

1. Remove the half axle according to the steps of removing the wheel end half axle.
2. Use a 22mm sleeve to remove the final drive connecting bolt in sequence.
3. Remove the final drive assembly from the axle housing.

Note: Distinguish the mounting position of final drive connecting bolt; use long bolt (M16*1.5*50) for the final drive with high convex plate, and short bolt (M16*1.5*40) for the rest.

Remove the input flange

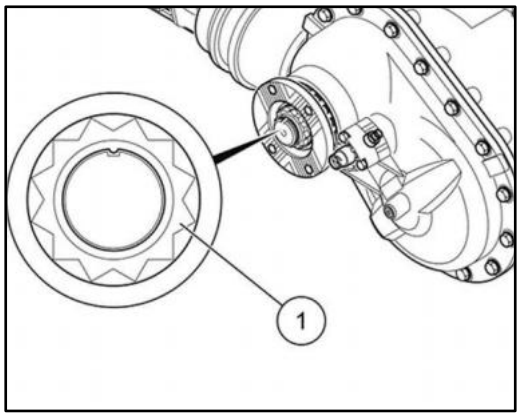

Removal steps

1. Restore the concavity of the locking nut ①.
2. Use a special socket tool (QX6802-11157) to remove the locking nut.
3. Tap or use a puller to remove the flange.

Remove the adjusting nut

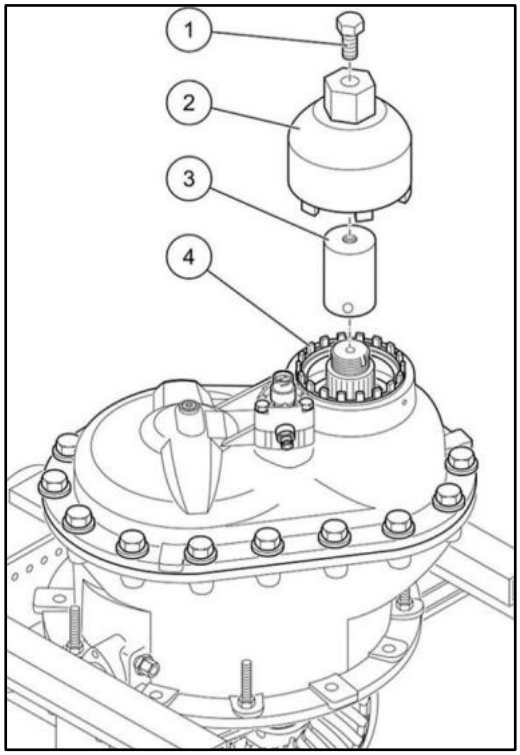

Removal steps

1. Use a T-45 sleeve to remove the locking gasket bolt (M8), and remove the locking gasket.
2. Use a special socket tool ② (QX6802-1163M) to remove the adjusting nut; remove the adjusting nut.

Remove the axle differential cylinder

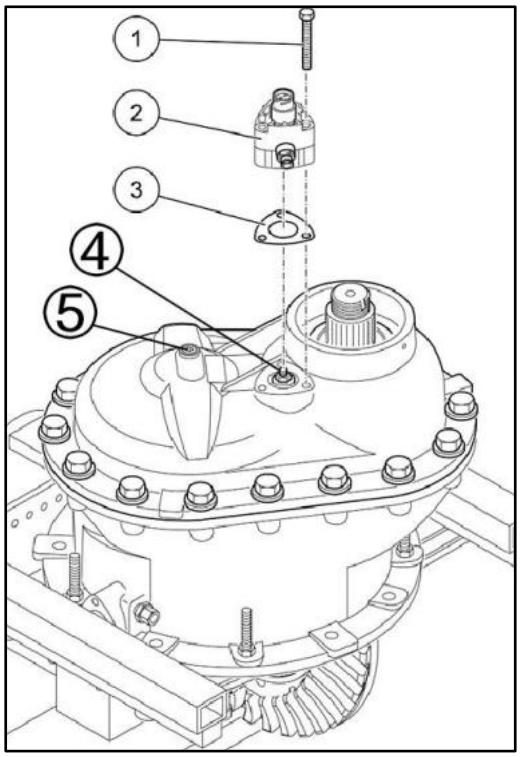

Removal steps

1. Use a T-45 sleeve to remove the cylinder connecting bolt (M8*35).
2. Remove the cylinder, sealing gasket, and fork shaft ④.
3. Use a 12mm hexagon socket to remove the oil plug ⑤.

Remove the final drive housing cover



Removal steps

1. Use a 10mm hexagon socket to remove the hexagon connecting bolt ①, and use a 17mm sleeve to remove the other hexagon bolt with flange (M12*1.5*35).
2. Remove the final drive housing cover.

Remove the input shaft

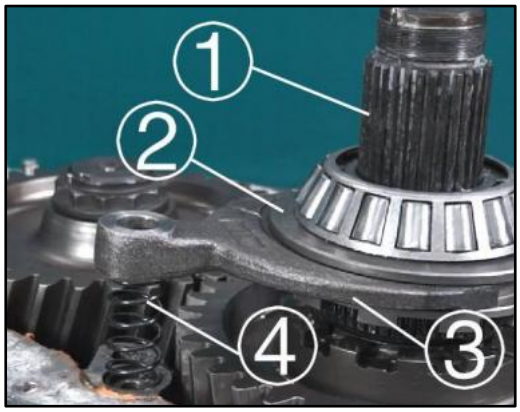

Removal steps

1. Remove the input shaft ① from the final drive, and remove the meshing sleeve ②, shift fork ③, and spring ④.

Remove the axle differential

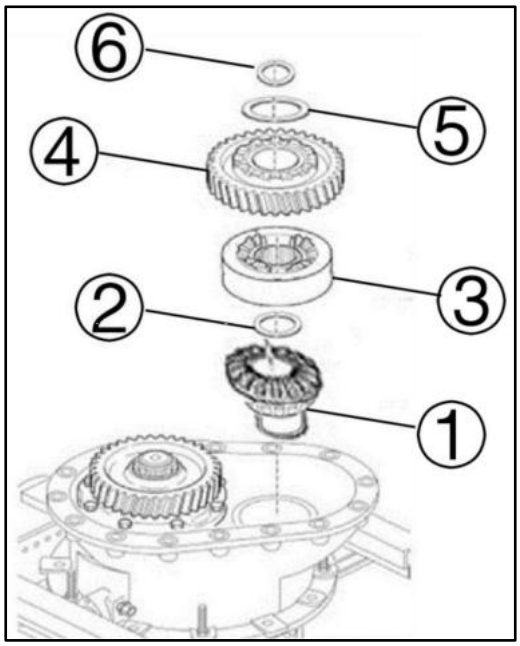

Removal steps

1. Take out the spacer ring ⑥, thrust washer ⑤, driving cylindrical gear ④, inter-axle differential ③, thrust washer ②, and half axle gear ① in sequence.

Remove the bearing

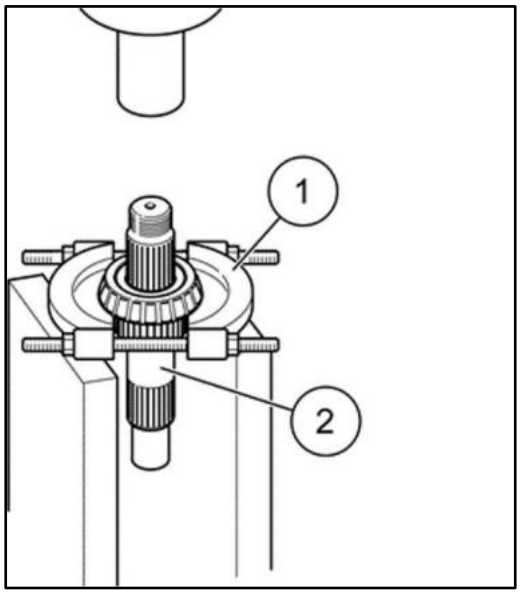

Removal steps

1. Fix the input shaft, and install fixture ① onto the bearing.
2. Press the input shaft ② and remove the bearing (the same as half axle gear bearing disassembly method).

Remove the driving gear

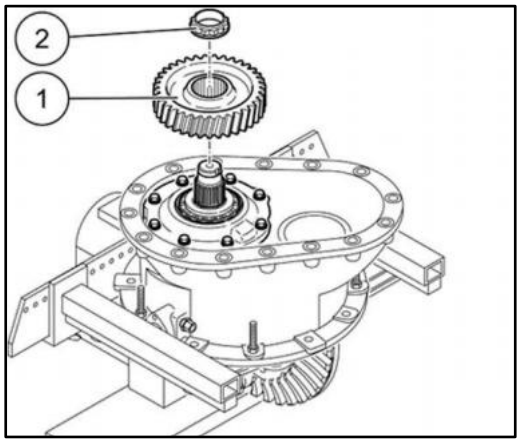

Removal steps

1. Use a special socket tool (QX6802-11157) to remove the locking nut.
2. Take out the drive wheel gear.

Note: The lower side of the drive wheel gear convex plate faces the locking nut; when tightening, the torque range of the locking nut is 1050 ± 50Nm, and the actuating torque is 1050Nm.

Remove the drive wheel bearing cap

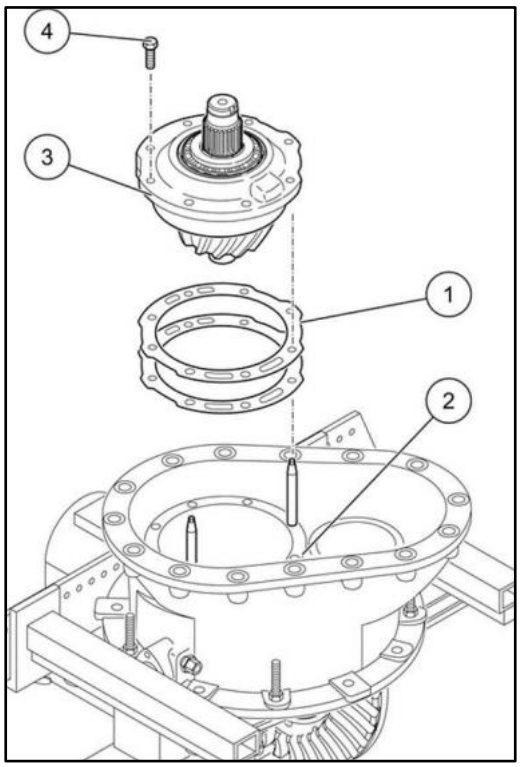

Removal steps

1. Use a 22mm sleeve to remove the connecting bolt ④ (M16*1.5*45).
2. Take out the drive wheel bearing cap ③ and the adjusting shim ①.
3. Take out the locating bearing ② and outer ring.

Note: The torque range is 425 ± 50Nm, and the actuating torque is 425Nm.

Disassemble and assemble wheel differential cylinder

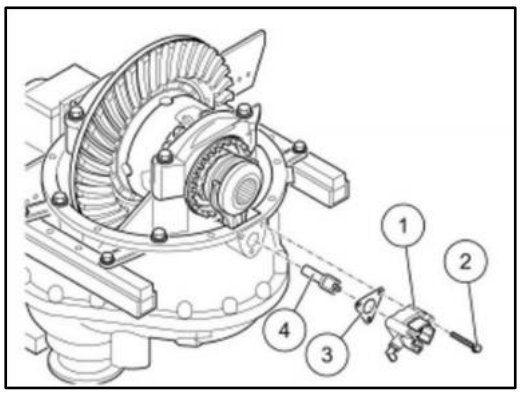

Removal steps

1. Reverse the final drive.
2. Use a E12 sleeve to remove the cylinder connecting bolt (M8*35).
3. Remove the cylinder, sealing gasket, shift fork rod, shift fork, meshing sleeve, and spring.

Note: Refer to the *MCY13 Rear Drive Axle - Final Drive for cylinder* to shift fork and meshing sleeve steps.

Remove the passive wheel

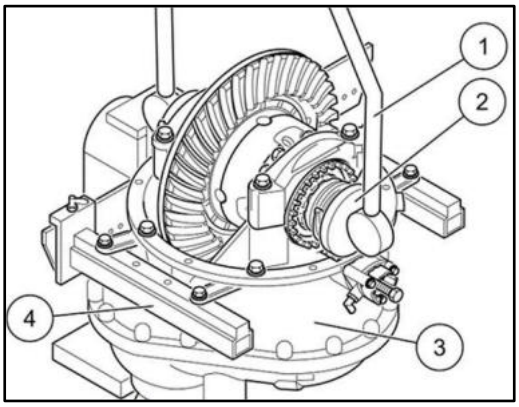

Removal steps

1. Remove the locking split pin and adjusting nut.
2. Use a 30mm sleeve to remove the bearing cap connecting bolt and remove the bearing cap.
3. Remove the passive wheel, differential, upper and lower housing, etc.

Note: Refer to the *MCY13 Rear Drive Axle - Final Drive* for passive wheel to lower housing removal steps.

Remove the differential planetary gearing

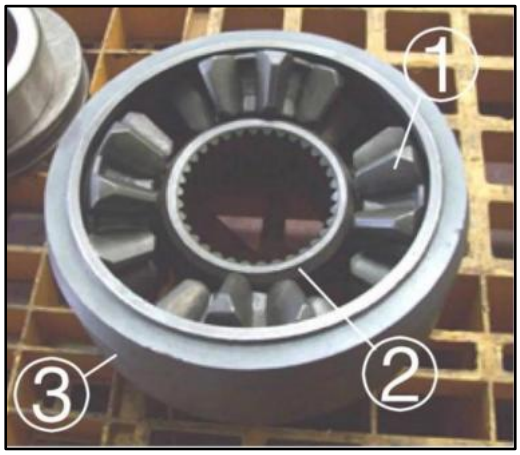

Removal steps

1. Push any axle journal of the cross shaft ② out of the oil shield ③, and remove the planetary gear ① from the cross shaft.
2. Rotate the cross shaft, and repeat the above steps for the other three axle journals.

Install the differential planetary gearing

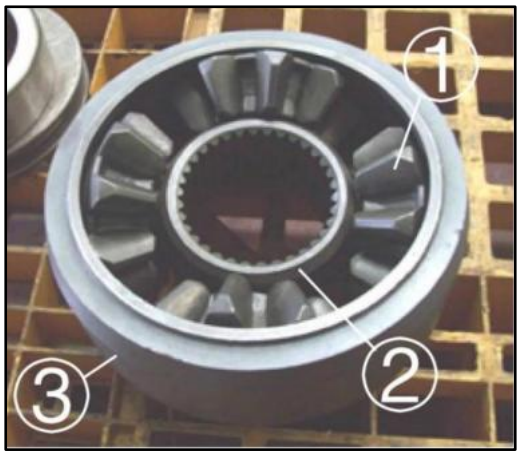

Installation steps

1. Push any axle journal of the cross shaft ② out of the oil shield ③, and install the planetary gear ① onto the cross shaft.
2. Rotate it back into the oil shield. Rotate the cross shaft, and repeat the above steps for the other three axle journals.

Note: After installation, the four planetary gears can be easily rotated by hand, with the large chamfer of the cross shaft facing the side of the oil shield.

Install the half axle gear and input shaft bearing

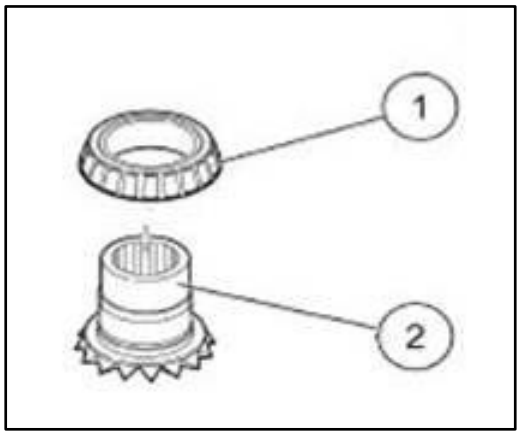

Installation steps

1. Put the rear half axle gear ② on the mounting bench, place the bearing inner ring on the rear half axle gear steadily, and press the bearing inner ring ① through heating the bearing inner ring or through pressing, to ensure that it is pressed to the end.

2. The installation method for the input shaft bearings is the same.

Note: Use a 0.02mm feeler gauge to insert into the lower side of the bearing and check if it is pressed in place.

Install the axle differential

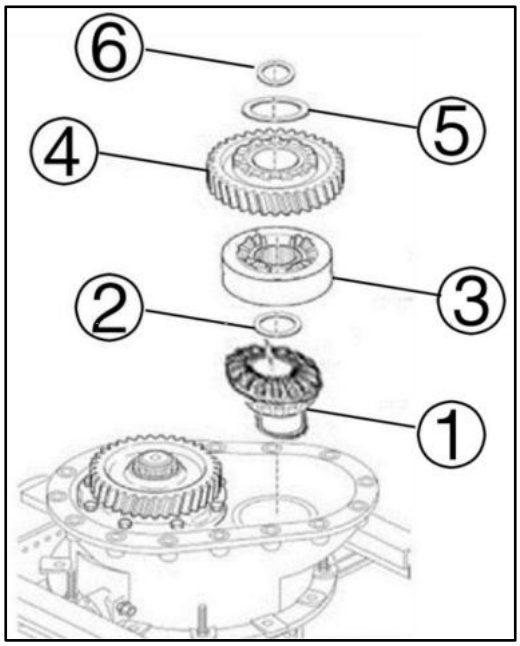

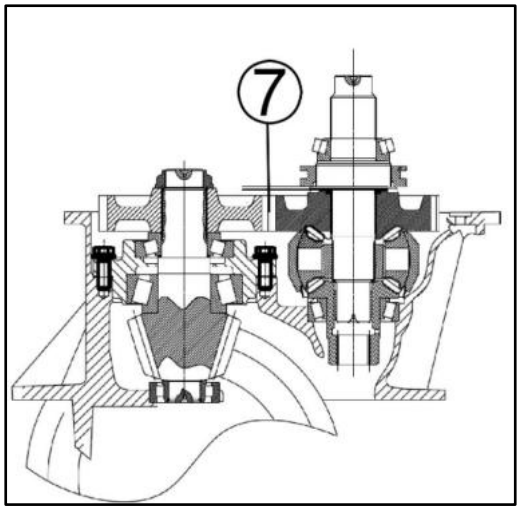

Installation steps

1. Place the pressed half axle gear ① onto the final drive housing bearing outer ring in sequence.
2. Place the thrust washer ② on the half axle gear.
3. Put the assembled inter-axle differential ③ into the final drive housing, with the oil shield facing the rear half axle gear, to ensure that the rear half axle gear fits correctly with the inter-axle differential planetary gear.
4. Place the driving cylindrical gear ④ on the inter-axle differential to ensure correct meshing. Then place the thrust washer ⑤ and the spacer ring ⑥.
5. Use a feeler gauge to measure the clearance between the inter-axle differential gear side backlash ⑦, with an actuating clearance of 0.8-1.2mm.

Note: Do not miss any components.

Install the input shaft

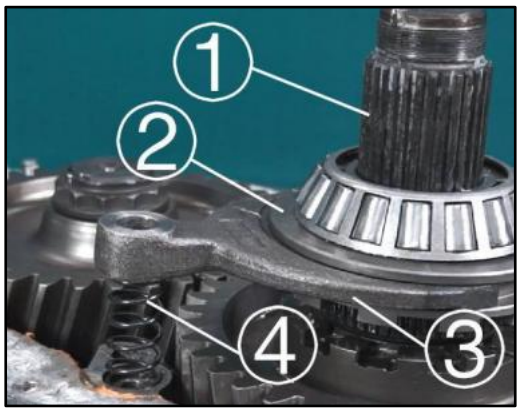

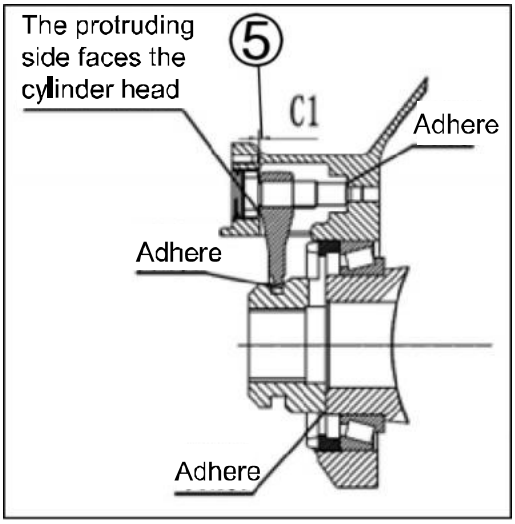

Installation steps

1. Mesh the meshing sleeve ② with the driving cylindrical gear; thread the input shaft ① with the bearing assembled through the meshing sleeve ② (spacer ring, thrust washer, driving cylindrical gear) in a top-down sequence, and align the input shaft spline with the driving cylindrical gear spline to ensure that the input shaft is installed to the bottom.

2. Thread the fork shaft through the shift fork and insert it into the bottom hole, use a feeler gauge to measure the clearance ⑤ C1 between the shift fork and the fork shaft, and calculate the thickness C1 (0.5mm) (an integer multiple of 0.5) of the required adjusting shim to ensure the clearance between the meshing sleeve ② and the driving cylindrical gear meshing position D; clearance requirements: 0.5mm ≤ D<1mm.

3. Pull out the fork shaft; press the spring ④ to connect the shift fork ③ to the meshing sleeve.

Note: Pay attention to the forward and backward direction of the shift fork, with the protruding side of the shift fork facing the cylinder.

Install the final drive cover



Installation steps

1. Apply flange sealant to the final drive housing.
2. Apply threadlocker to the connecting bolt.
3. Use a 10mm sleeve to tighten the hexagon socket connecting bolt ① (M12*1.5*30), with a torque range of 110 ± 15Nm and an actuating torque of 110Nm. Use a 17mm sleeve to symmetrically tighten the hexagon head connecting bolt (M12*1.5*30) in the remaining positions, with a torque range of 150 ± 15Nm and an actuating torque of 150Nm.

Auxiliary material: Loctite 1596 flange sealant, Loctite 243 threadlocker

Install the input shaft upper bearing outer ring

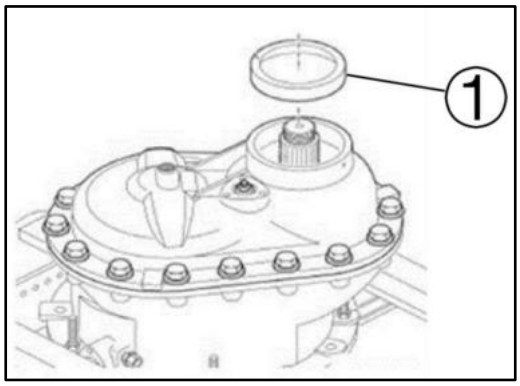

Installation steps

1. Press the input shaft upper bearing outer ring ① into the final drive cover using a tooling.

Install the cylinder

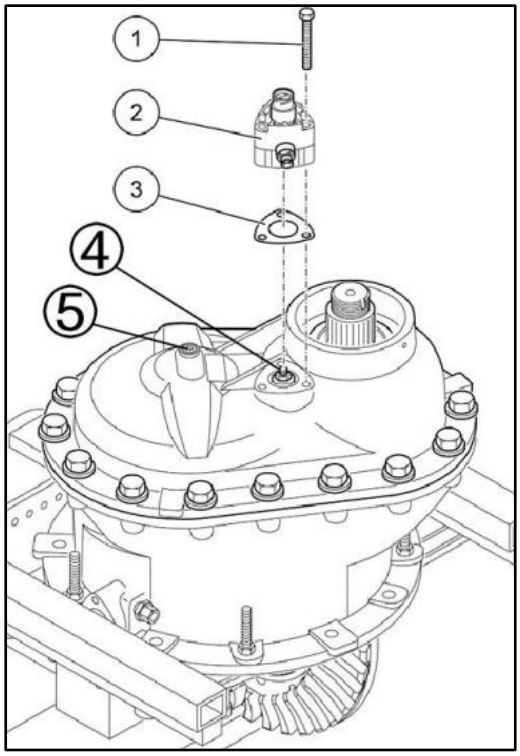

Installation steps

1. Insert the fork shaft ④ into the shift fork hole, thread the hexagon bolt with flange (M8*35) through the cylinder in sequence, and screw the sealing gasket onto the final drive housing, and tighten it using a T-45 sleeve, with a torque range of 25 ± 2Nm, and an actuating torque of 25Nm.
2. Use a 12mm hexagon socket to tighten the oil plug ⑤, with a torque range of 100 ± 15Nm and an actuating torque of 100Nm.

Note: The protruding side of the sealing gasket faces the cylinder.

Install the adjusting nut oil seal

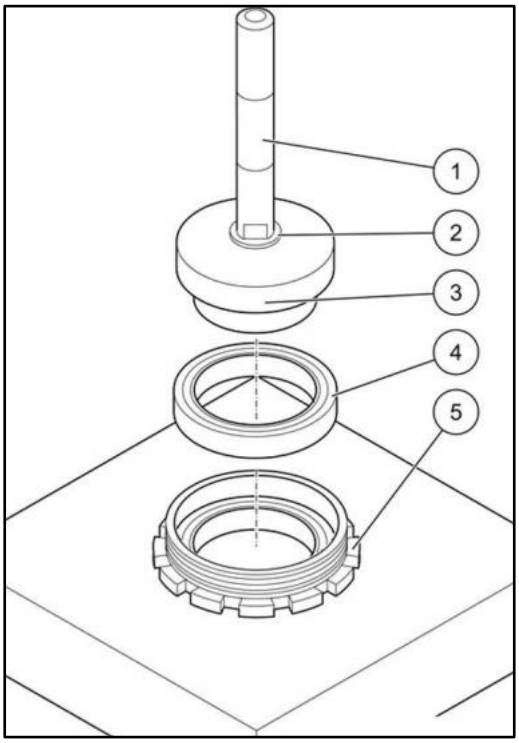

Installation steps

1. Place the adjusting nut ⑤ on the mounting bench.
2. Place oil seal ④ on the adjusting nut horizontally and steadily, and press the oil seal to the bottom (flush with the end face).

Note: Distinguish between the front and back sides of the oil seal, with the oil seal lip facing the thread side.

Install the adjusting nut

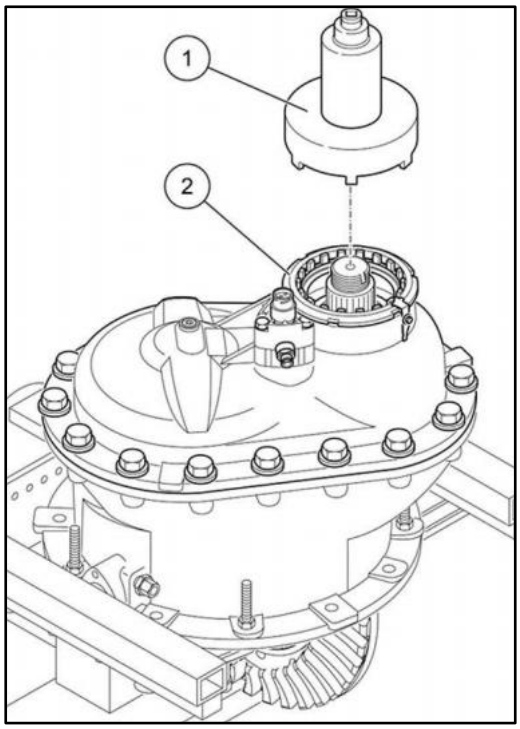

Installation steps

1. Apply pipe thread sealant to the thread of the adjusting nut.
2. Screw the adjusting nut into the final drive cover by hand, and then tighten the adjusting nut using a special socket tool (QX6802-1163M), with a tightening torque of 250Nm.
3. Rotate the input shaft for ≥ 10 turns by hand, then turn the adjusting nut torque to 250Nm, and retreat by 30°; use a hammer to tap the input shaft, turn the adjusting nut, and check if the adjusting nut is tightened.
4. Fix the adjusting nut using a lock plate, and use a T-45 sleeve to thread the bolt (M8) through the lock plate, and screw it to the final drive housing, with a torque range of 10±1Nm, and an actuating torque of 10Nm.

Auxiliary material: TS1577 pipe thread sealant

Install the locking nut

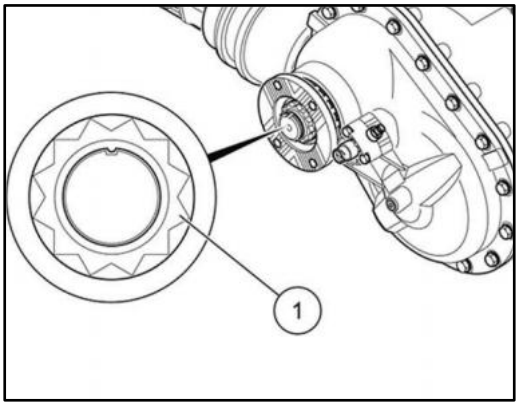

Installation steps

1. Install the input flange to the bottom, apply threadlocker to the locking nut, and use a special socket tool (QX6802-11157) to tighten the locking nut, with a torque range of 950 ± 50Nm and an actuating torque of 950Nm.
2. Lock the concavity of the locking nut at the input shaft notch.

Auxiliary material: Loctite 271 threadlocker

Install the intermediate final drive assembly

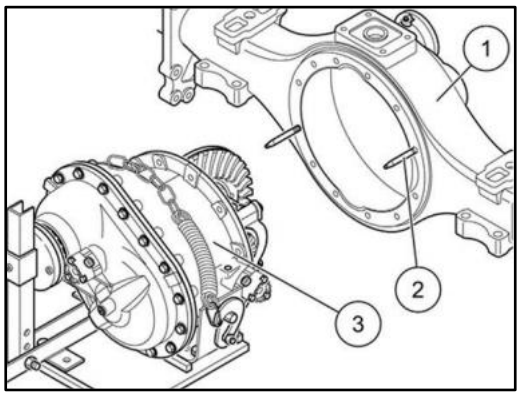

Installation steps

1. Apply an appropriate amount of flange sealant to the mating face between the final drive and the axle housing.
2. Install the final drive onto the mounting rack.
3. Connect the final drive to the axle housing tusing guide bolts.
4. Apply an appropriate amount of threadlocker to the connecting bolt.
5. Use a 22mm sleeve to symmetrically tighten the connecting bolt, with a torque range of 370 ± 40Nm.
6. Install the half axle and other components according to the MCY13 wheel end installation steps.

Auxiliary material: Flange sealant, threadlocker

Note: Distinguish the mounting position of final drive connecting bolt; use long bolt (M16*1.5*50) for the final drive with high convex plate, and short bolt (M16*1.5*40) for the rest.

Drum-type wheel end

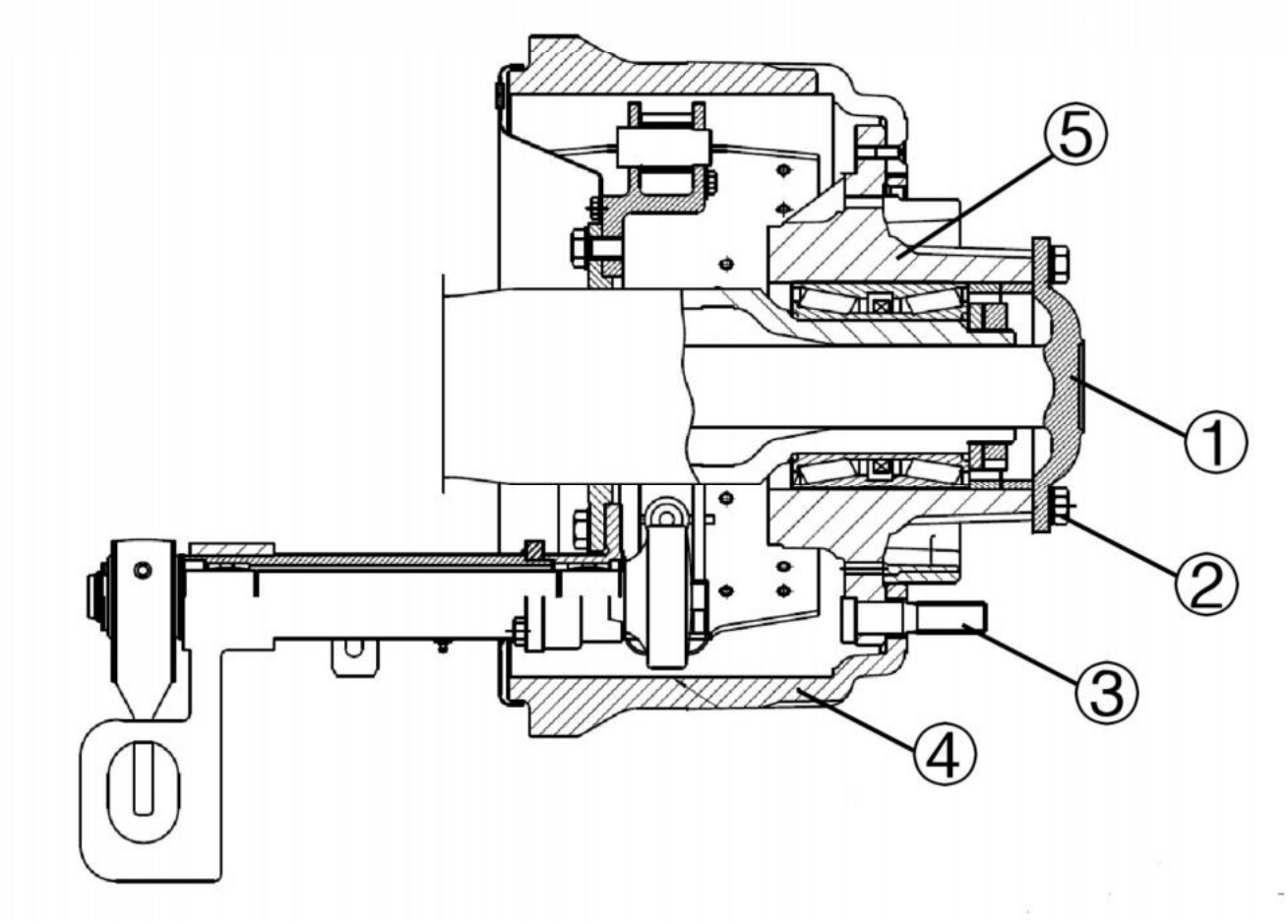

1. Half axle 2. Half axle connecting bolt 3 Wheel bolt 4. Brake drum 5. Wheel hub

Remove the brake drum screw

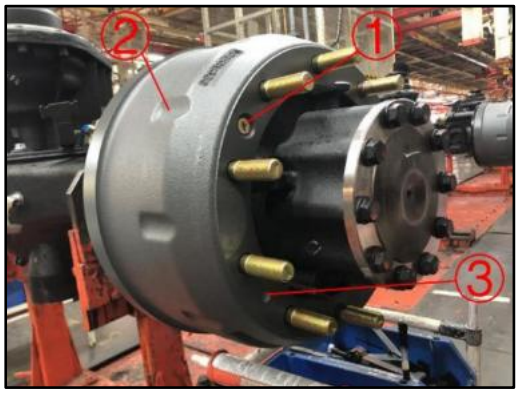

Removal steps

1. Remove the wheel nut, tire and other components.
2. Use a cross screwdriver to remove the brake drum screw ①; use a 16mm sleeve to install M10 bolt into brake drum dismantling hole ③, open the brake drum ②.

Remove the brake drum



Removal steps

1. Use a lifting tool to hook the brake drum wheel bolt hole ①, and lift the brake drum ② off the brake ③.

Remove the pressure switch

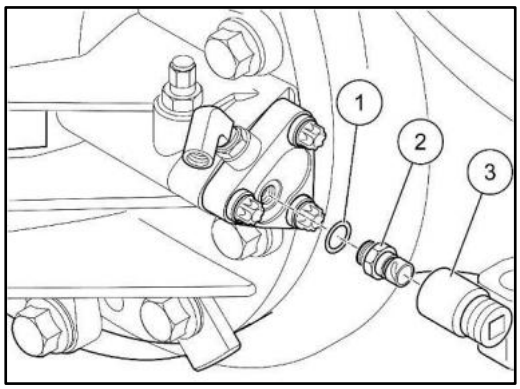

Removal steps

1. Use a 27mm sleeve ③ to remove the pressure switch ②.
2. Remove the sealing washer ①.

Mesh the differential lock

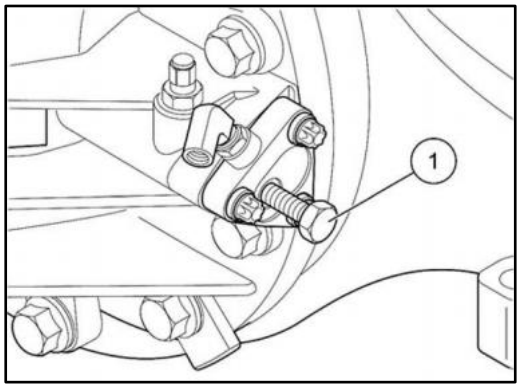

Operational steps

1. Use a 27mm sleeve to install the (M18*1.5) process bolt ① into the pressure switch thread, and rotate the wheel hub left and right until the differential lock engages. The tightening torque of the process bolt ① is 35Nm.

Remove the half axle



Removal steps

1. Use a 22mm sleeve to remove the half axle connecting bolt ① (M16*1.5*40) counterclockwise.
2. Extract the half axle ② from the axle housing chamber.

Remove the axle head locking nut



Removal steps

1. Restore the "concavity" on the axle head locking nut ② using a chisel, then remove the axle head locking nut using a special socket tool (Q6802-10200).
2. Remove the thrust washer ①.

Remove the wheel hub



Removal steps

1. Install the guide sleeve ② into the thread of axle head locking nut, and pull out the wheel hub ① from the axle head with both hands.
2. Remove the wheel hub O-ring and wheel hub spacer ring.

Note: The O-ring is disposable, and should be replaced with a new one.

Remove ABS bracket



Removal steps

1. Use an iron rod to pry the ABS bracket ① off the shaft shoulder ②.

Remove brake bottom plate fitting



Removal steps

1. Use a 21mm sleeve to remove the brake bottom plate connecting bolt ① (M14*1.5).
2. Lift down the brake bottom plate fitting ②.

Install brake bottom plate fitting



Installation steps

1. Lift the brake bottom plate fitting ② onto the axle housing axle head fixing disk.
2. Apply an appropriate amount of threadlocker to the hexagon bolt with flange.
3. Use a 21mm sleeve to thread bolt ① (M14*1.5) through the brake bottom plate, and screw it into the fixing disk thread, and tighten the brake bottom plate bolt, with a torque range of 162 ± 16Nm and an actuating torque of 162Nm.

Auxiliary material: Loctite 271 threadlocker

Note: The brake lining on the same side should be from the same manufacturer.

Install ABS bracket



Installation steps

1. Apply 1/3 circle of holding adhesive at the matching position ② between the ABS bracket and the shaft shoulder.

2. Use a tooling to impact bracket ① onto the shaft shoulder; measure the distance between the ABS bracket and the shaft shoulder using a dial gauge, with a distance range of 0.2-0.35mm.

Auxiliary material: Loctite 680 holding adhesive

Note: Use a dial gauge to measure the distance between the ABS bracket and the shaft shoulder, which should be 31 (+1/0) mm; when adding ABS wire, please distinguish it. The left wheel joint of the disc-type axle is gray white, while the right wheel joint is black; the drum type is the same on both sides.

Remove the guide sleeve



Installation steps

1. Install the guide sleeve ① into the thread of axle head locking nut.
2. Uniformly apply the high-efficiency grease to the contact surface ② between the axle head and the wheel hub bearing using a soft foam block.

Auxiliary materials: SKF LGAF 3E high-efficiency grease, soft foam block.

Note: No high-efficiency grease is applied to the location ③ where the middle of bearing contact surface is 2cm away from the shaft shoulder.

Install the wheel hub O-ring



Installation steps

1. Install the wheel hub O-ring ① into bearing unit wheel hub inner seal groove ②.

Install the wheel hub



Installation steps

1. Lift the wheel hub ① and push it into the axle head through the guide sleeve ②.
2. Remove the guide sleeve; wipe off the oil fouling.

Note: Do not damage the ABS gear ring during the process, and do not lose the O-ring.

Tighten the axle head locking nut



Operational steps

1. Install the thrust washer ② and the axle head locking nut ① on the axle head in sequence.
2. Use a special socket tool (Q6802-10200) to tighten the axle head locking nut, with a torque range of 1200 ± 100Nm and an actuating torque of 1200Nm (the same for the left and right wheels).
3. Knock the concavity of axle head locking nut ① at axle head notch, and ensure that there are no cracks at the locking point.

Note: ABS performance test: Rotate the wheel hub by hand for about 30 RPM, observe the displayed instantaneous induced voltage value, with a range standard of ≥ 0.2V. If the measurement results do not meet the standards, adjust the distance between the ABS probe and the gear ring; or replace the ABS wire or gear ring.

Spacer ring location diagram

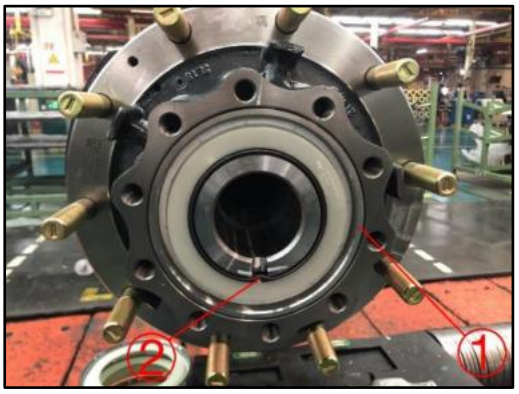

Note: Before installing the half axle, confirm whether the axle head locking nut ② is locked, and whether the wheel hub spacer ring ① is installed in the matching position between the bearing unit and the half axle; if the wheel hub assembly needs to be replaced, pay attention to the matching between the spacer ring and the wheel hub. It is required that the distance between the bearing unit and the wheel hub end face after adding the spacer ring is ≤ 0.1mm.

Install the half axle

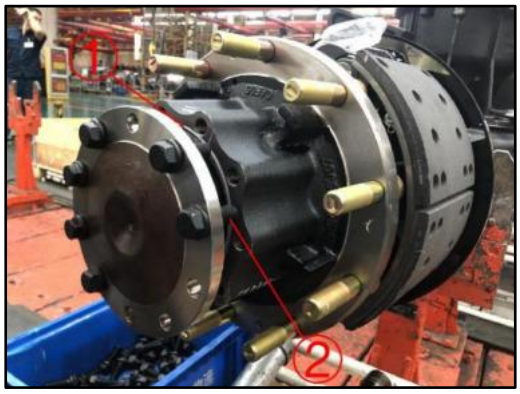

Installation steps

1. Apply threadlocker to the thread of the half axle bolt ②; apply flange sealant to the contact surface ① between the half axle and the wheel hub.
2. Install the half axle into the axle housing chamber; rotate the half axle left and right to mesh with the final drive half axle gear.

Auxiliary material: Loctite 271 threadlocker, Loctite 1596 flange sealant

Tighten the half axle bolt



Installation steps

1. Manually screw in the half axle bolt ① (M16*1.5*40) by 2-3 threads; use a 22mm sleeve to tighten it symmetrically, with a torque range of 360 ± 40Nm and an actuating torque of 360Nm.

Install the pressure switch

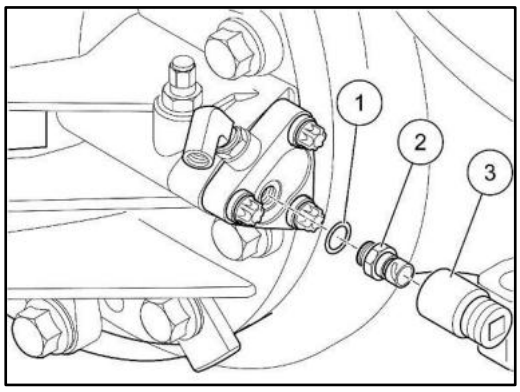

Installation steps

1. Use a 27mm sleeve to remove the (M18*1.5) bolt; install the sealing gasket ① pressure switch ② into the differential locking cylinder using a 27mm sleeve ③, and tighten it in sequence, with a torque range of 40 ± 5Nm and an actuating torque of 40Nm.

2. Connect the air circuit to test whether the differential lock can be disengaged freely; check if the On-Off signal of the pressure switch is normal.

Note: The smooth surface of the pressure switch sealing washer faces the pressure switch.

Install the brake drum



Installation steps

1. Lift the brake drum ①, place the brake ②, align the wheel bolt with the brake drum bolt hole ③, and align the brake drum screw hole ④.

Install the brake drum screw

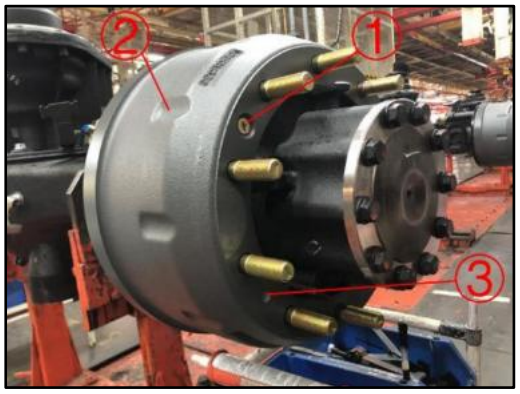

Installation steps

1. After pushing the brake drum ② to the bottom, use a cross screwdriver to tighten screw ①. With a torque range of 22±2Nm and an actuating torque of 22Nm.
2. Rotate the brake drum and check for any interference with the dust cover or abnormal noise; block the dismantling hole ③ using flange sealant to prevent rust and corrosion.

Auxiliary material: Flange sealant

Note: Please ensure that the brake drum and adjusting arm on both sides of the same axle are from the same manufacturer.

Inspect brake clearance difference

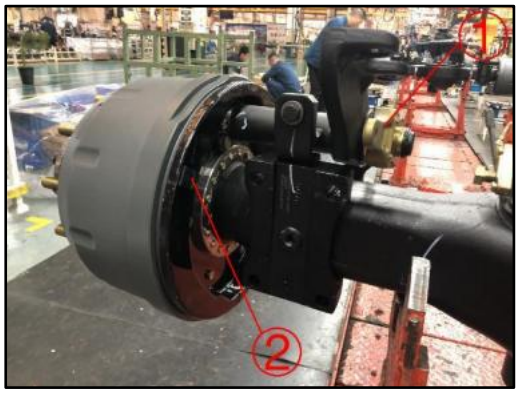

Operational steps

1. Pull the brake adjusting arm ①, then there is a noticeable braking stroke; it can quickly return to its original position after being released.
2. Use a feeler gauge to 100% measure the brake clearance difference between the brake shoe and brake drum through the rubber plug hole ②, with a clearance range of<0.3mm.
3. Testing method: Select a 0.3mm feeler leaf, remove the rubber plug, and insert the feeler leaf into the hole. Pull the brake clearance adjusting arm to make the brake lining fit the brake drum; at this point, try to remove the feeler leaf. If it can be easily removed, it indicates that the brake clearance difference is not qualified; Measure the brake clearance on the other side of the brake drum using the same method. If the feeler leaf cannot be removed twice, it is considered qualified.

Drum-type brake

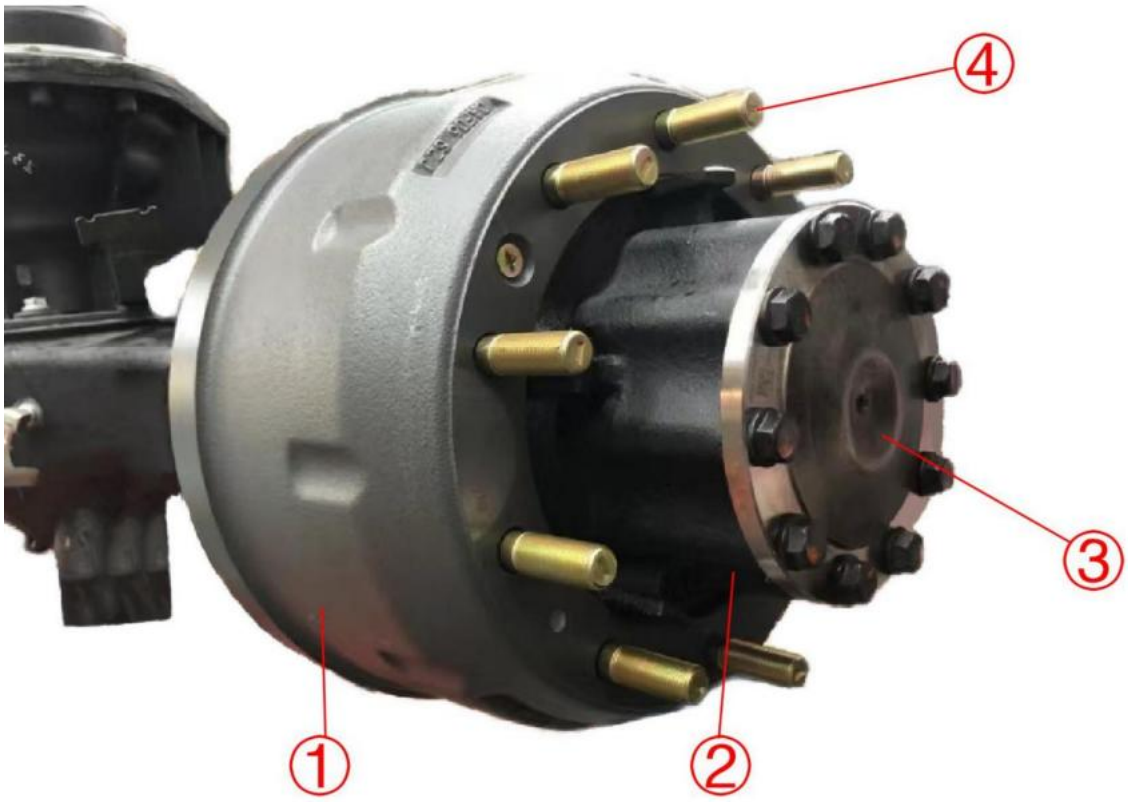

1. Brake drum 2. Wheel hub 3. Half axle 4. Wheel bolt

Remove the brake drum screw

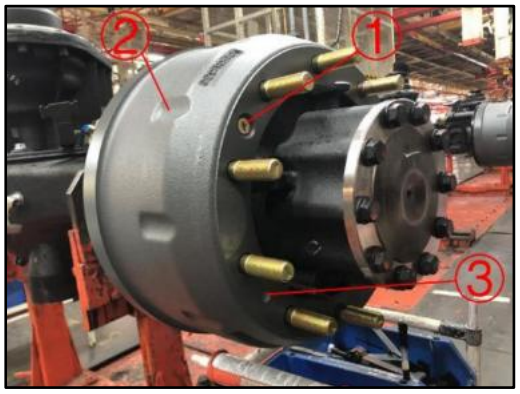

Removal steps

1. Remove the wheel nut, tire and other components.
2. Use a cross screwdriver to remove the brake drum screw ①; use a 16mm sleeve to instal M10 bolt into brake drum dismantling hole ③, open the brake drum ②.

Remove the brake drum



Removal steps

1. Use a lifting tool to hook the brake drum wheel bolt hole ①, and lift the brake drum ② off the brake ③.

Remove the pressure switch

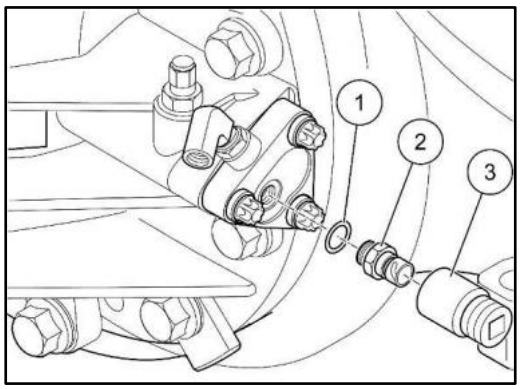

Removal steps

1. Use a 27mm sleeve ③ to remove the pressure switch ②.
2. Remove the sealing washer ①.

Mesh the differential lock

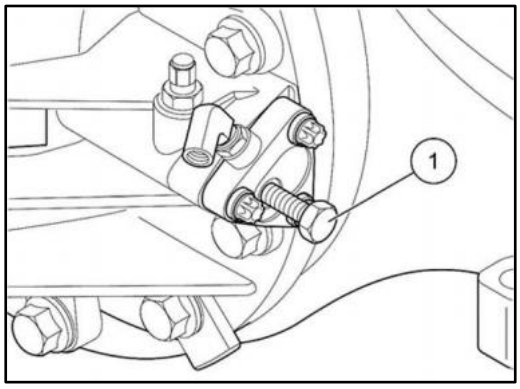

Removal steps

1. Use a 27mm sleeve to install the process bolt ① (M18*1.5) into the pressure switch thread, and rotate the wheel hub left and right until the differential lock engages. The actuating torque of the process bolt is 35Nm.

Remove the half axle



Removal steps

1. Use a 22mm sleeve to remove the half axle connecting bolt ① (M16*1.5*40) counterclockwise.
2. Extract the half axle ② from the axle housing chamber.

Remove the axle head locking nut



Removal steps

1. Restore the "concavity" on the axle head locking nut ② using a chisel, then remove the axle head locking nut using a special socket tool (Q6802-10200).
2. Remove the thrust washer ①.

Remove the wheel hub



Removal steps

1. Install the guide sleeve ② into the thread of axle head locking nut, and pull out the wheel hub ① from the axle head with both hands.
2. Remove the wheel hub O-ring and wheel hub spacer ring.

Note: The O-ring is disposable, and should be replaced with a new one.

Remove ABS bracket



Removal steps

1. Use an iron rod to pry the ABS bracket ① off the shaft shoulder ②.

Remove brake bottom plate fitting



Removal steps

1. Use a 21mm sleeve to remove the brake bottom plate connecting bolt ① (M14*1.5).
2. Lift down the brake bottom plate fitting ②.

Install brake bottom plate fitting



Installation steps

1. Lift the brake bottom plate fitting ② onto the axle housing axle head fixing disk.
2. Apply an appropriate amount of threadlocker to the hexagon bolt with flange.
3. Use a 21mm sleeve to thread bolt ① (M14*1.5) through the brake bottom plate, and screw it into the fixing disk thread, and tighten the brake bottom plate bolt, with a torque range of 162 ± 16Nm and an actuating torque of 162Nm.

Auxiliary material: Loctite 271 threadlocker

Note: The brake lining on the same side should be paired for use.

Install ABS bracket



Installation steps

1. Apply 1/3 circle of holding adhesive at the matching position ② between the ABS bracket and the shaft shoulder.

2. Use a tooling to impact bracket ① onto the shaft shoulder; measure the distance between the ABS bracket and the shaft shoulder using a dial gauge, with a distance range of 0.2-0.35mm.

Auxiliary material: Loctite 680 holding adhesive

Note: Use a dial gauge to measure the distance between the ABS bracket and the shaft shoulder, which should be 31 (+1/0) mm; when adding ABS wire, please distinguish it. The left wheel joint of the disc-type axle is gray white, while the right wheel joint is black; the drum type is the same on both sides.

Remove the guide sleeve



Installation steps

1. Install the guide sleeve ① into the thread of axle head locking nut.
2. Uniformly apply the high-efficiency grease to the contact surface ② between the axle head and the wheel hub bearing using a soft foam block.

Auxiliary materials: SKF LGAF 3E high-efficiency grease, soft foam block.

Note: No high-efficiency grease is applied to the location ③ where the middle of bearing contact surface is 2cm away from the shaft shoulder.

Install the wheel hub O-ring



Installation steps

1. Install the wheel hub O-ring ① into bearing unit wheel hub inner seal groove ②.

Install the wheel hub



Installation steps

1. Lift the wheel hub ① and push it into the axle head through the guide sleeve ②.
2. Remove the guide sleeve, and wipe off the oil fouling.

Note: Do not damage the ABS gear ring during the installation process, and do not lose the O-ring.

Tighten the axle head locking nut



Installation steps

1. Install the thrust washer ② and the axle head locking nut ① on the axle head in sequence.
2. Use a special socket tool (Q6802-10200) to tighten the axle head locking nut, with a torque range of 1200 ± 100Nm and an actuating torque of 1200Nm (the same for the left and right wheels).
3. Lock the concavity of axle head locking nut ① at axle head notch, and ensure that there are no cracks at the locking point.

Note: ABS performance test: Rotate the wheel hub by hand for about 30 RPM, observe the displayed instantaneous induced voltage value, with a range standard of ≥ 0.2V . If the measurement results do not meet the standards, adjust the distance between the ABS probe and the gear ring; or replace the ABS wire or gear ring.

Spacer ring location diagram

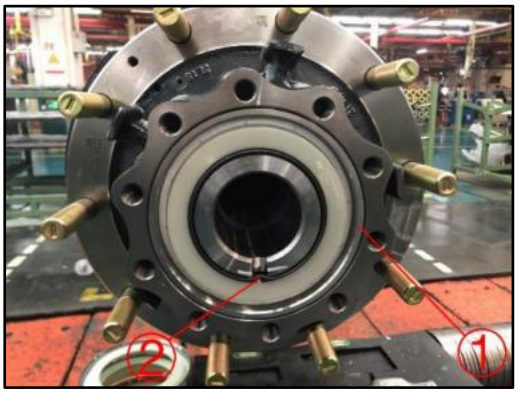

Note: Before installing the half axle, confirm whether the axle head locking nut ② is locked, and whether the wheel hub spacer ring ① is installed in the matching position between the bearing unit and the half axle; if the wheel hub assembly needs to be replaced, pay attention to the matching between the spacer ring and the wheel hub. It is required that the distance between the bearing unit and the wheel hub end face after adding the spacer ring is ≤ 0.1mm.

Install the half axle



Installation steps

1. Apply threadlocker to the thread of the half axle bolt ②; apply flange sealant to the contact surface ① between the half axle and the wheel hub.
2. Install the half axle into the axle housing chamber; rotate the half axle left and right to mesh with the final drive half axle gear.

Auxiliary material: Loctite 271 threadlocker, Loctite 1596 flange sealant

Tighten the half axle bolt



Installation steps

1. Manually screw in the half axle bolt ① (M16*1.5*40) by 2-3 threads; use a 22mm sleeve to tighten it symmetrically, with a torque range of 360 ± 40Nm and an actuating torque of 360Nm.

Install the pressure switch

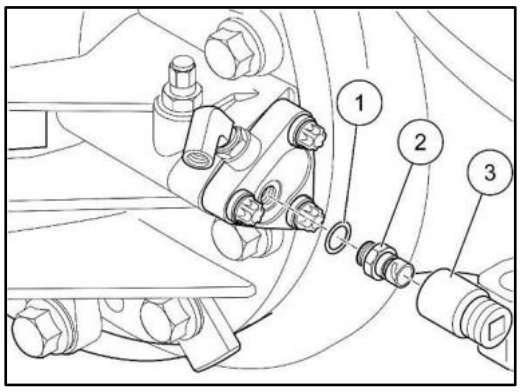

Installation steps

1. Use a 27mm sleeve to remove the (M18*1.5) bolt; install the sealing gasket ① pressure switch ② into the differential locking cylinder using a 27mm sleeve ③, and tighten it in sequence, with a torque range of 40 ± 5Nm and an actuating torque of 40Nm.

2. Connect the air circuit to test whether the differential lock can be disengaged freely; check if the On-Off signal of the pressure switch is normal.

Note: The smooth surface of the pressure switch sealing washer faces the pressure switch.

Install the brake drum



Installation steps

1. Lift the brake drum, place the brake ②, align the wheel bolt with the brake drum bolt hole ③, and align the brake drum screw hole ④.

Install the brake drum screw

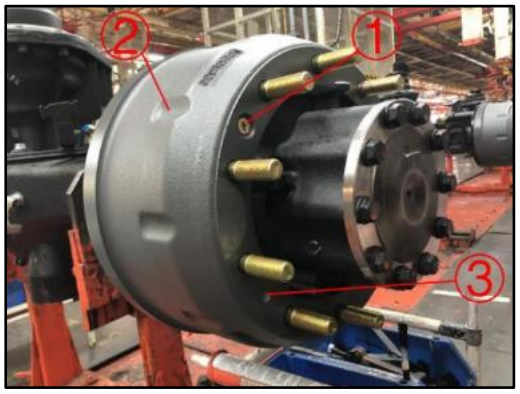

Installation steps

1. After pushing the brake drum ② to the bottom, use a cross screwdriver to tighten screw ①. With a torque range of 22±2Nm and an actuating torque of 22Nm.
2. Rotate the brake drum and check for any interference with the dust cover or abnormal noise; block the dismantling hole ③ using flange sealant to prevent rust and corrosion.

Auxiliary material: Loctite 1596 flange sealant

Note: The brake drums and adjusting arms on both sides of the same axle should be paired for use.

Inspect brake clearance difference

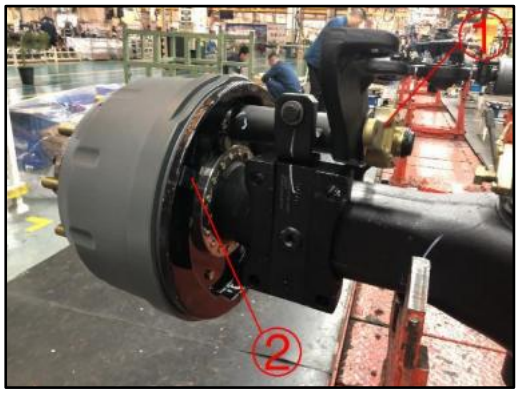

Operational steps

1. Pull the brake adjusting arm ①, then there is a noticeable braking stroke; it can quickly return to its original position after being released.
2. Use a feeler gauge to 100% measure the brake clearance difference between the brake shoe and brake drum through the rubber plug hole ②, with a clearance range of<0.3mm.
3. Testing method: Select a 0.3mm feeler leaf, remove the rubber plug, and insert the feeler leaf into the hole. Pull the brake clearance adjusting arm to make the brake lining fit the brake drum; at this point, try to remove the feeler leaf. If it can be easily removed, it indicates that the brake clearance difference is not qualified; Measure the brake clearance on the other side of the brake drum using the same method. If the feeler leaf cannot be removed twice, it is considered qualified.

Remove the brake dust cover

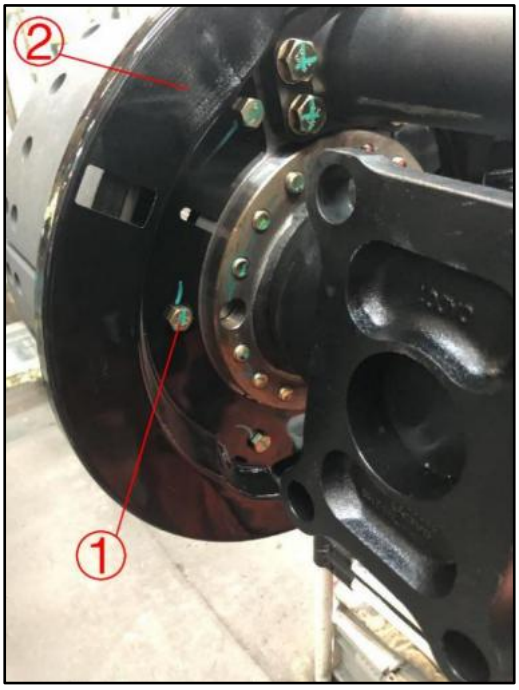

Removal steps

1. Use a 16mm sleeve to remove the dust cover connecting bolt ①; remove the dust covers on both sides ②.
2. Remove the brake drum according to standard operation instructions.

Remove the return spring

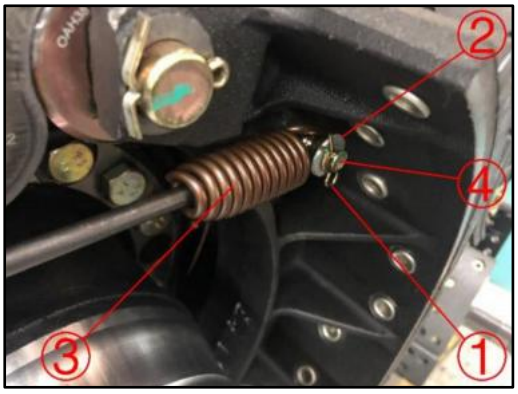

Removal steps

1. Use steel wire pliers to remove the locking pin ①, and remove the flat washer ②.
2. Use an expanding tool to remove the circlip ③ from the axis pin ④.

Remove the brake shoe

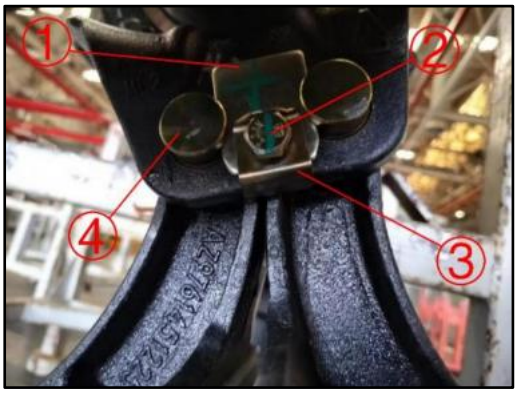

Removal steps

1. Reset the deformed part of lock plate ③; use a 16mm sleeve to remove the lock block bolt ② and remove the lock block ①.
2. Use a hammer and a iron rod to remove the brake shoe support pin ④; remove the brake shoe.

Install brake shoe



Installation steps

1. Install the O-ring ① into the brake shoe support pin hole; apply anti seize lubricant on the contact surface ② between the support pin and the support pin hole.
2. Thread the support pin (the end ③ with locking groove) into the brake bottom plate and brake shoe from one side of the dust cover, and then expose the locking groove (same method on both sides).
3. Connect the lock block to support pin locking groove, align it with the lock plate bolt hole; apply threadlocker to the lock block bolt, use a 16mm sleeve to thread the lock block bolt through the lock plate in sequence, and screw the lock block into the brake bottom plate thread, with a torque range of 55 ± 6Nm, and an actuating torque of 55Nm.

Auxiliary material: Loctite C5-A anti seize lubricant, Loctite 243 threadlocker

Install the return spring

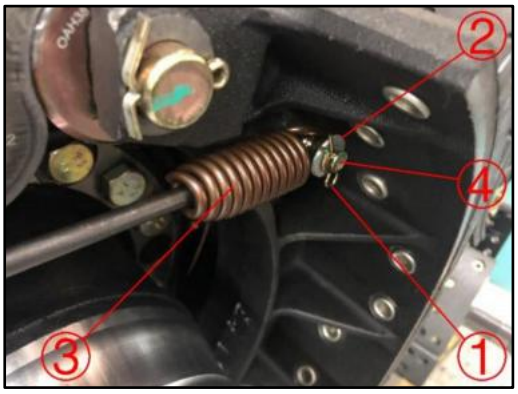

Installation steps

1. Use an expanding tool to install the return spring ③ into axis pin ④ positioning groove, place the flat washer ② on the axis pin, and install the locking pin ①.

Note: The opening of the return spring is facing the support pin; inspect whether the components are assembled properly.

Install the brake dust cover

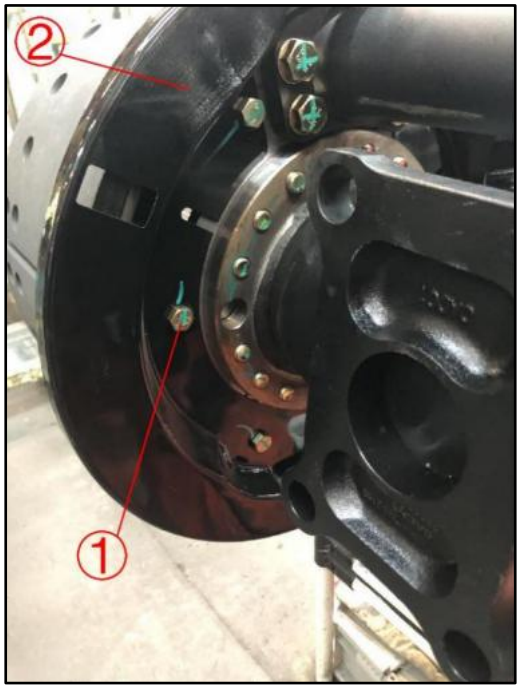

Installation steps

1. Use a 16mm sleeve to thread the dust cover connecting bolt ① through the dust cover, and screw it into the brake bottom plate thread, and tighten the dust cover connecting bolt, with a torque range of 46 ± 5Nm and an actuating torque of 46Nm.

Note: Install brake drum according to standard operation instructions; use a feeler gauge to check the brake clearance difference, with an actuating clearance of 0.3mm.

Remove the adjusting arm

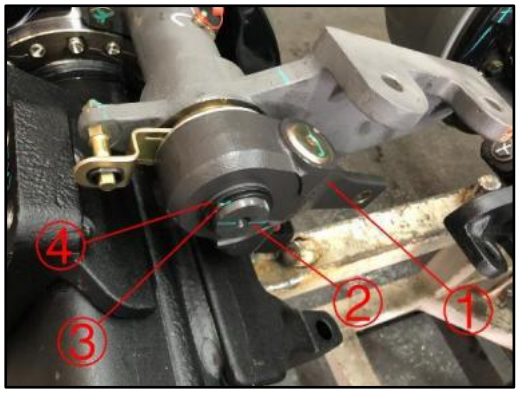

Removal steps

1. Use circlip pliers to remove the circlip ③ from the camshaft ② fixing groove ; remove the adjusting arm ① and adjusting washer ④.

Install the adjusting arm

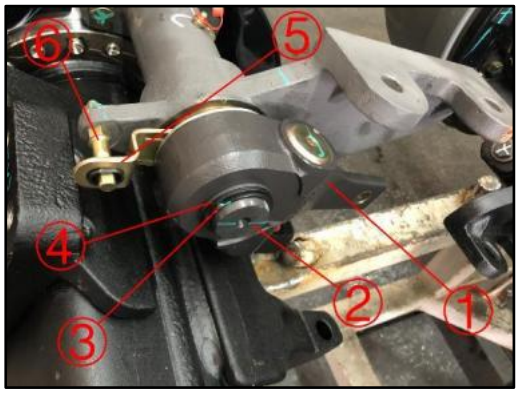

Installation steps

1. Align the adjusting arm ① with the camshaft ②, while connecting the control arm ⑤ of the self-adjusting arm to the axis pin⑥ (manual adjusting arm does not have this function).
2. Select an adjusting shim ④ with appropriate thickness, and place it on the camshaft. Use a circlip pliers to install the circlip ③ into the camshaft fixing groove.
3. Use a feeler gauge to measure the clearance of the self-adjusting arm, with an actuating clearance of 0.5-1.5mm.

Note: Install and use the adjusting arm according to the brake direction arrow on the housing.

Disc wheel end

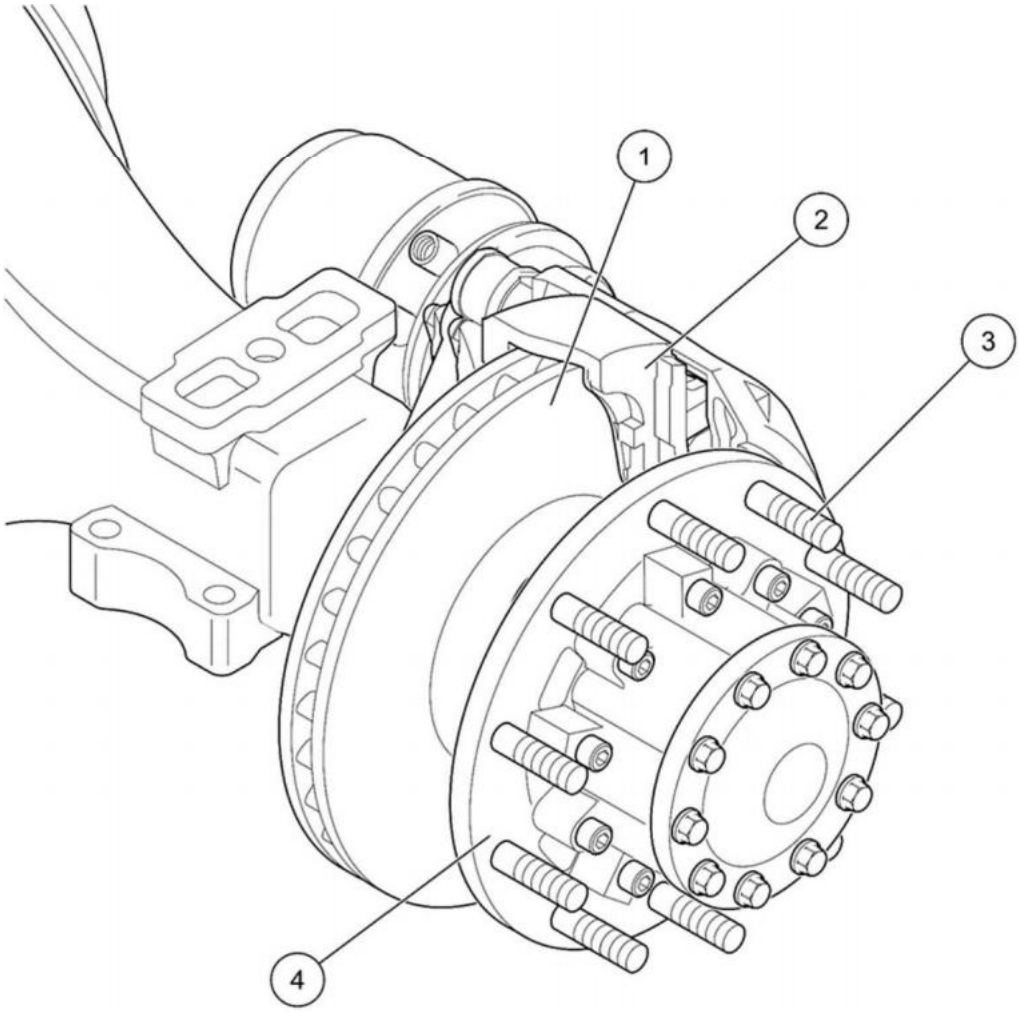

1. Brake disc 2. Disc brake 3. Wheel bolt 4. Wheel hub

Remove the pressure switch

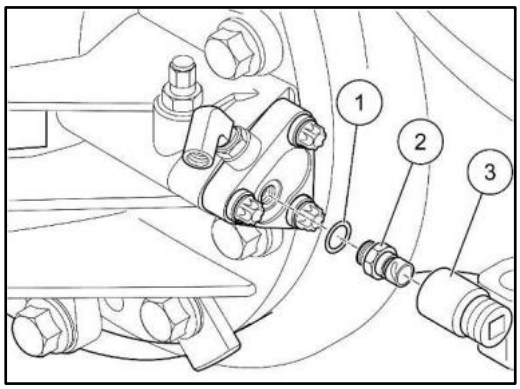

Removal steps

1. Use a 27mm sleeve to remove the pressure switch.
2. Remove the sealing washer.

Mesh the differential lock

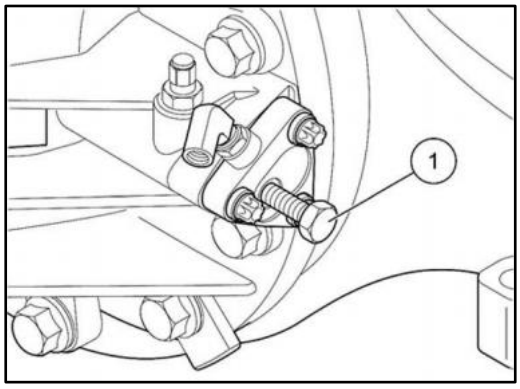

Removal steps

1. Use a 27mm sleeve to install the process bolt (M18*1.5) into the pressure switch thread, and rotate the wheel hub until the differential lock engages. The actuating torque of the process bolt ① is 35Nm.

Remove the half axle

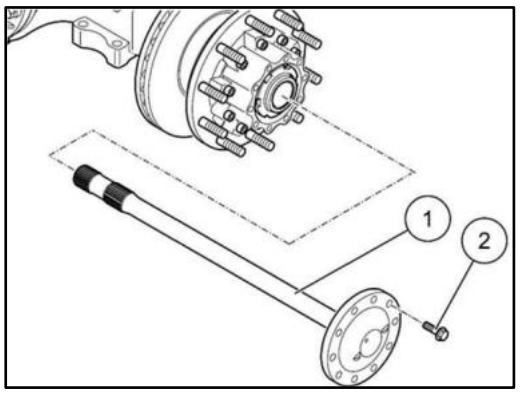

Removal steps

1. Use a 22mm sleeve to remove the half axle connecting bolt ② (M16*1.5*40) counterclockwise.
2. Extract the half axle ① from the axle housing chamber.

Remove the axle head locking nut

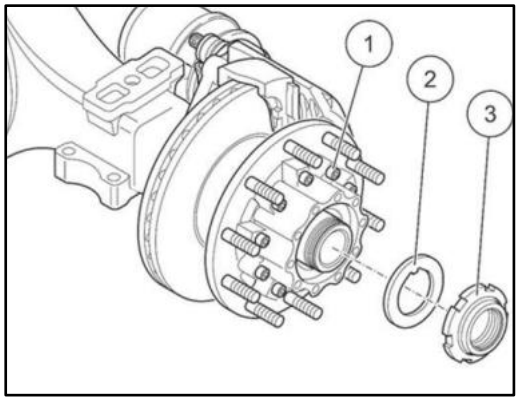

Removal steps

1. Restore the "concavity" on the axle head locking nut ③ using a chisel, then remove the axle head locking nut using a special socket tool (Q6802-10200).
2. Remove the thrust washer ②.

Remove the wheel hub

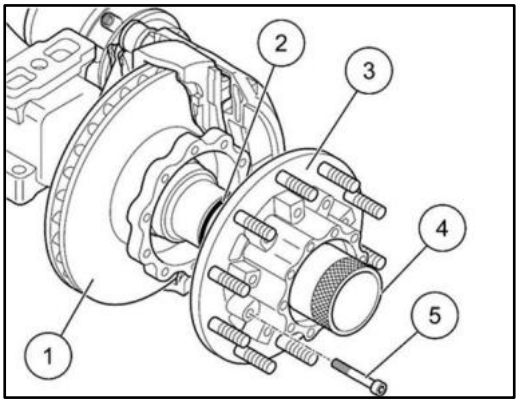

Removal steps

1. Use a 24mm sleeve to remove the connecting bolt (M16*1.5); separate the wheel hub from the brake disc.
2. Install the guide sleeve ④ into the thread of axle head locking nut, and pull out the wheel hub from the axle head with both hands.
3. Remove the wheel hub O-ring and wheel hub spacer ring.

Note: The O-ring is disposable, and should be replaced with a new one.

Install ABS bracket

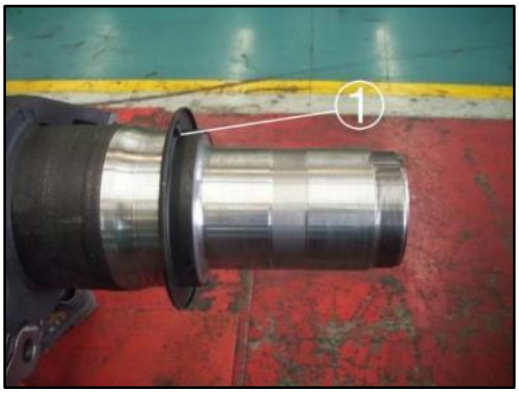

Installation steps

1. Apply 1/3 circle of holding adhesive at the matching position between the ABS bracket and the shaft shoulder.
2. Use a tooling to impact bracket onto the shaft shoulder; measure the distance between the ABS bracket and the shaft shoulder using a dial gauge, with a distance range of 0.2-0.35mm.

Auxiliary material: Loctite 680 holding adhesive

Note: When adding ABS wire, please distinguish it. The left wheel joint of the disc-type axle is gray white, while the right wheel joint is black; the drum type is the same on both sides.

Remove the guide sleeve



Installation steps

1. Install the guide sleeve into the thread of axle head locking nut.
2. Uniformly apply the high-efficiency grease to the contact surface between the axle head and the wheel hub bearing using a soft foam block.

Auxiliary materials: SKF LGAF 3E high-efficiency grease, soft foam block.

Note: No high-efficiency grease is applied to the location where the middle of bearing contact surface is 2cm away from the shaft shoulder.

Install the wheel hub O-ring



Installation steps

1. Install the wheel hub O-ring ② into bearing unit wheel hub inner seal groove ①.

Install the wheel hub

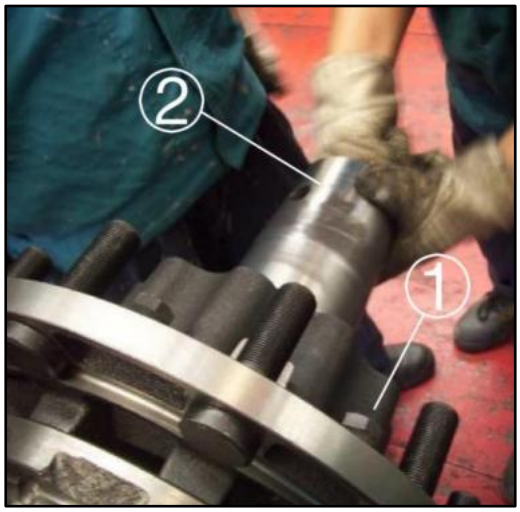

Installation steps

1. Lift the wheel hub and push it into the axle head through the guide sleeve.
2. Remove the guide sleeve; wipe off the oil fouling.

Note: Do not damage the ABS gear ring and the O-ring during the installation process.

Tighten the connecting bolt for brake disc



Installation steps

1. Apply threadlocker to the connecting bolt for brake disc ①.
2. Use a 24mm sleeve to symmetrically tighten the connecting bolt for brake disc (M16*1.5), with a torque range of 280 ± 30Nm and an actuating torque of 280Nm.

Auxiliary material: Loctite 271 threadlocker

Tighten the axle head locking nut

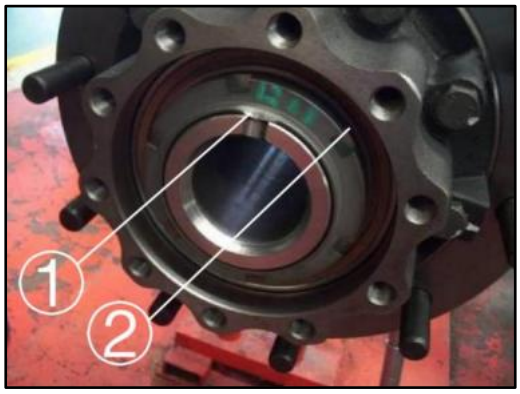

Installation steps

1. Install the thrust washer and the axle head locking nut on the axle head in sequence.
2. Use a special socket tool (Q6802-10200) to tighten the axle head locking nut, with a torque range of 1200 ± 100Nm and an actuating torque of 1200Nm (the same for the left and right wheels).
3. Knock the concavity of axle head locking nut at axle head notch, and ensure that there are no cracks at the locking point.

Note: ABS performance test: Rotate the wheel hub by hand for about 30 RPM, observe the instantaneous induced voltage value, with a range standard of ≥ 0.2V. If the measurement results do not meet the standards, adjust the distance between the ABS probe and the gear ring; or replace the ABS wire or gear ring.

Tighten the half axle bolt

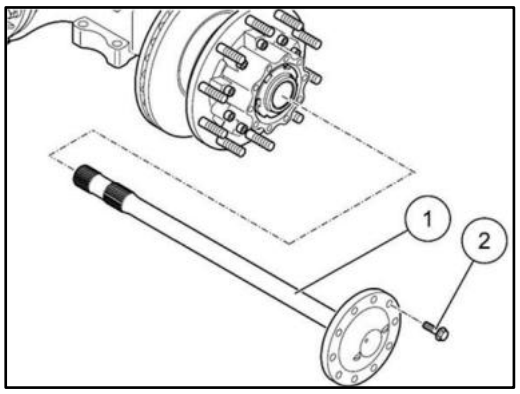

Installation steps

1. Apply threadlocker to the thread of the half axle bolt ②; apply flange sealant to the contact surface between the half axle ① and the wheel hub.
2. Install the half axle into the axle housing chamber; rotate the half axle left and right to mesh with the final drive half axle gear.
3. Install the half axle bolt (M16*1.5*40); use a 22mm sleeve to tighten it symmetrically, with a torque range of 360 ± 40Nm and an actuating torque of 360Nm.

Auxiliary material: Loctite 271 threadlocker, Loctite 1596 flange sealant

Spacer ring location diagram



Note: Before installing the half axle, confirm whether the axle head locking nut ① is locked, and whether the wheel hub spacer ring ② is installed in the matching position between the bearing unit and the half axle; if the wheel hub assembly needs to be replaced, pay attention to the matching between the spacer ring and the wheel hub. It is required that the distance between the bearing unit and the wheel hub end face after adding the spacer ring is ≤ 0.1mm.

Install the pressure switch

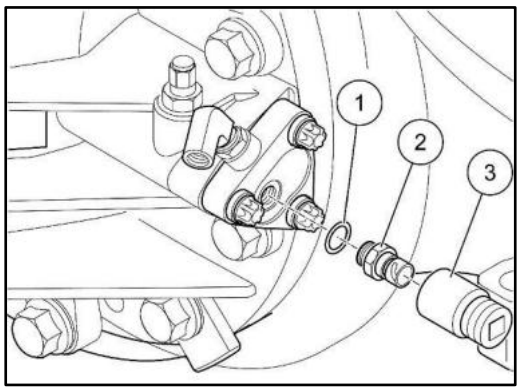

Installation steps

1. Use a 27mm sleeve to remove the (M18*1.5) bolt; install the sealing gasket pressure switch into the differential locking cylinder using a 27mm sleeve, and tighten it in sequence, with a torque range of 40 ± 5Nm and an actuating torque of 40Nm.

2. Connect the air circuit to test whether the differential lock can be disengaged freely; check if the On-Off signal of the pressure switch is normal.

Note: The smooth surface of the pressure switch sealing washer faces the pressure switch.

Disc brake

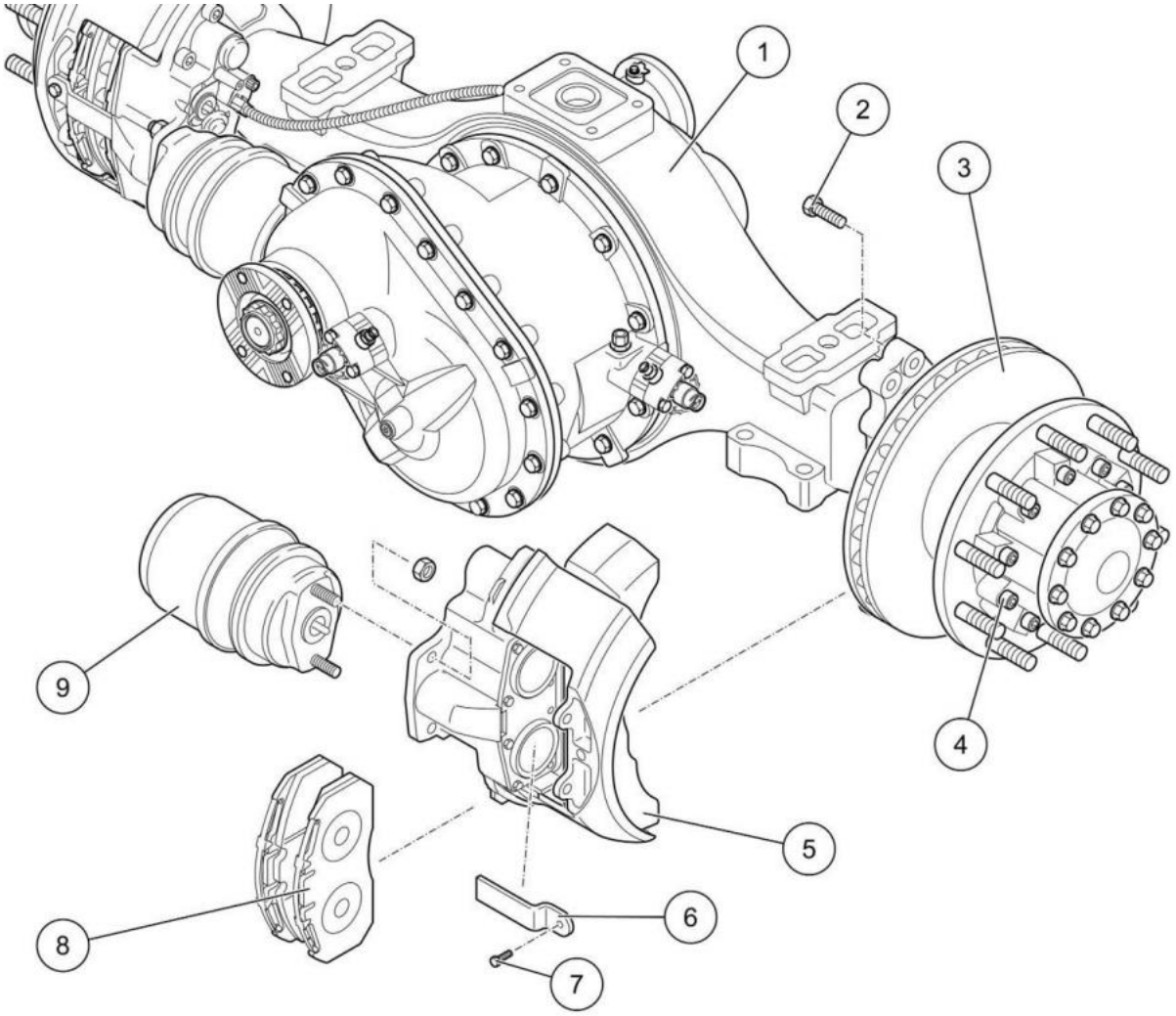

1. Axle housing 2. Connecting bolt for brake caliper 3. Brake disc 4. Connecting bolt for brake disc 5. Brake caliper 6. Pressing plate 7. Pressing plate bolt 8. Brake lining 9. Air chamber

Remove the pressing plate

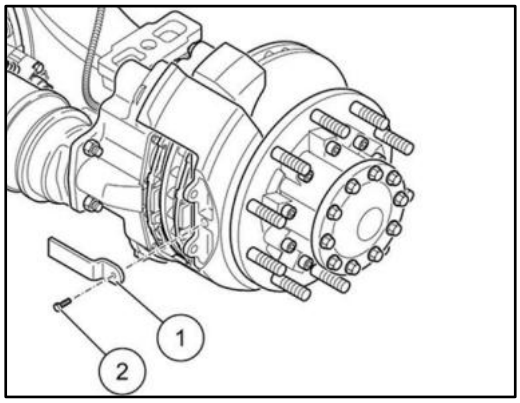

Removal steps

1. Remove the brake lining pressing plate bolt (M12*25) using an 18mm sleeve.
2. Remove the brake lining pressing plate.

Remove brake lining

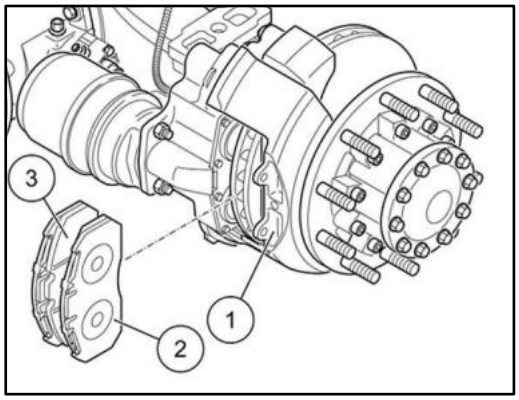

Removal steps

1. Take out the brake lining from the guide channel.
2. Check the wear of the brake lining.

Note: If it cannot be taken out, please adjust the manual adjusting shaft to enlarge the brake lining clearance.

Enlarge the brake lining clearance

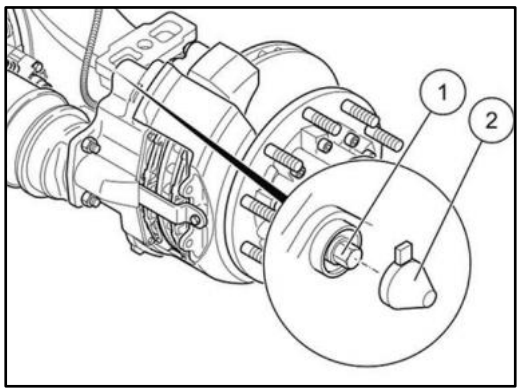

Operational steps

1. Open the protection cap ② by hand.
2. Rotate the manual adjusting shaft ① counterclockwise to enlarge the brake lining clearance.

Remove brake chamber

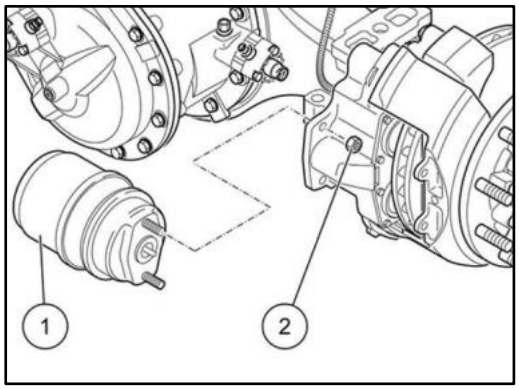

Removal steps

1. Use a 24mm sleeve to remove the brake chamber connecting nut.
2. Remove the brake chamber.

Remove the brake

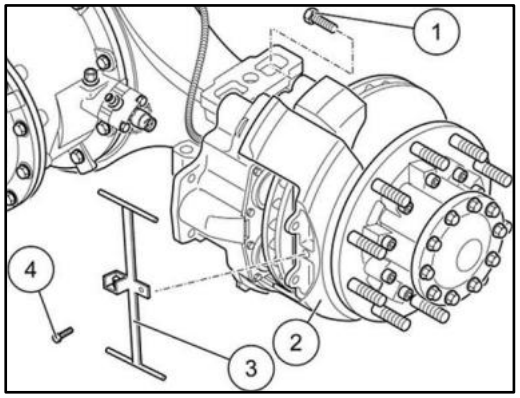

Removal steps

1. Install auxiliary tool ③ onto brake ② through connecting bolt ④.
2. Use a 30mm sleeve to remove the brake connecting bolt ① (M20*65).
3. Use auxiliary tool to lift down the brake ②.
4. Remove the auxiliary tool ③.

Remove brake disc

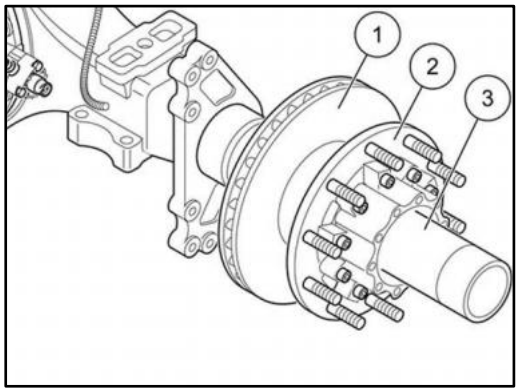

Removal steps

1. Remove the half axle bolt and half axle.
2. Check if the brake disc is severely worn.
3. Use a guide tube to remove the wheel hub and brake disc from the axle head.

Note: Disassemble and assemble the half axle and wheel hub according to *MCY13 Disc Brake Drive Axle - Wheel End*.

Remove brake disc

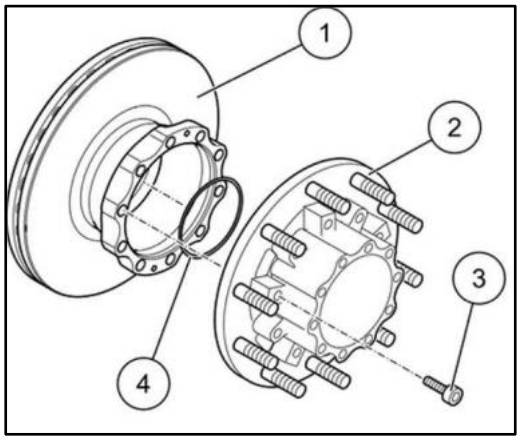

Removal steps

1. The brake disc can be removed separately from the wheel hub at the axle head, or you can remove the brake first and then remove them. Please refer to the instructions for disassembling/assembling the disc wheel end.
2. Use a 24mm sleeve to remove the wheel hub and connecting bolt for brake disc (M16*1.5) counterclockwise.

Install the brake disc

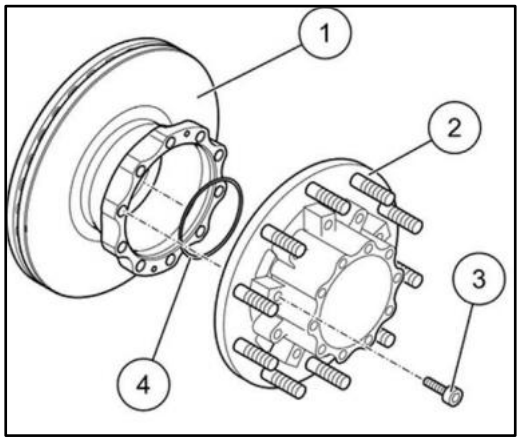

Installation steps

1. Install the O-ring into the bearing groove on the inside of the wheel hub.
2. Apply threadlocker to the connecting bolt for brake disc (M16*1.5).
3. Use a 24mm sleeve to tighten the connecting bolt, with a torque range of 280 ± 30Nm and an actuating torque of 280Nm.

Auxiliary material: Loctite 243 threadlocker

Note: The O-ring is disposable, and should be replaced with a new one.

Install the wheel hub and brake disc

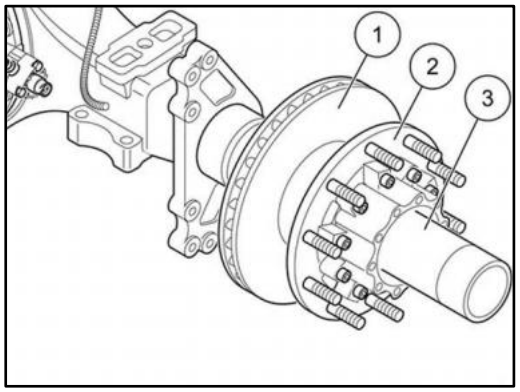

Installation steps

1. Apply installation plaster evenly to the axle head.
2. Install the wheel hub and brake disc onto the axle housing axle head through the guide tube.
3. Complete the installation of the wheel hub and half axle (same left and right wheels). The torque range of the large nut for shaft head is 1200 ± 100 Nm, and the torque range of the half axle bolt is 360 ± 40 Nm.

Auxiliary material: SKF LGAF 3E high-efficiency grease, Loctite 243 threadlocker, Loctite 1596 flange sealant

Note: The O-ring is disposable, and should be replaced with a new one.

Install the brake

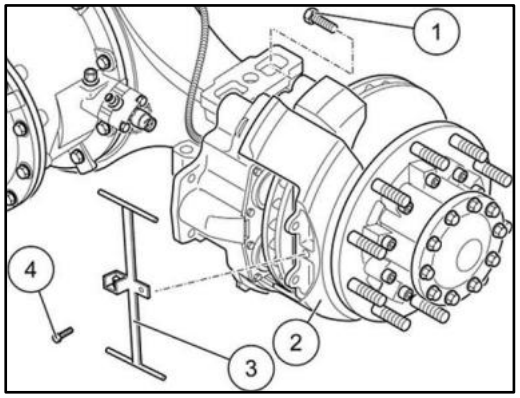

Installation steps

1. Install the auxiliary tool onto the brake through the connecting bolt; lift the brake onto the brake disc.
2. Apply threadlocker to the brake connecting bolt (M20*65); use a 30mm sleeve to symmetrically tighten the bolt, with a torque range of 568 ± 28Nm and an actuating torque of 560Nm.
3. Remove the auxiliary tool.

Auxiliary material: Loctite 271 threadlocker

Tightening order

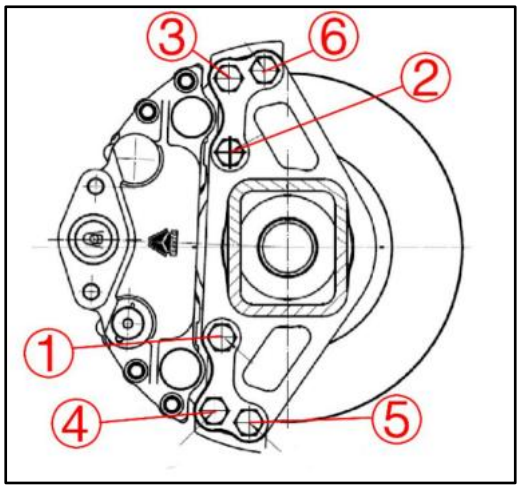

Operational steps

Note: Tighten the components in the order of ①, ②, ③, ④, ⑤, ⑥.

Apply anti-seize agent

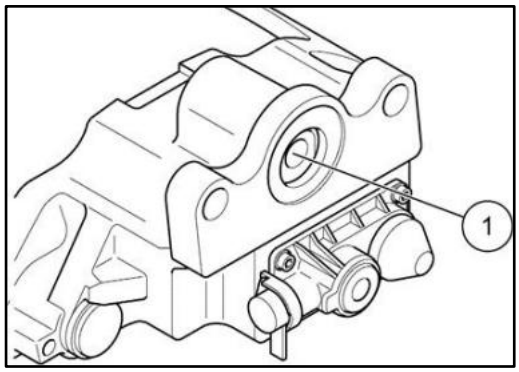

Operational steps

1. Remove the protection on the brake range rod hole.
2. Apply an appropriate amount of lubricant on the range rod.

Auxiliary material: HR 46-361 S lubricant

Note: Brake inner cavity should be kept clean.

Install brake chamber

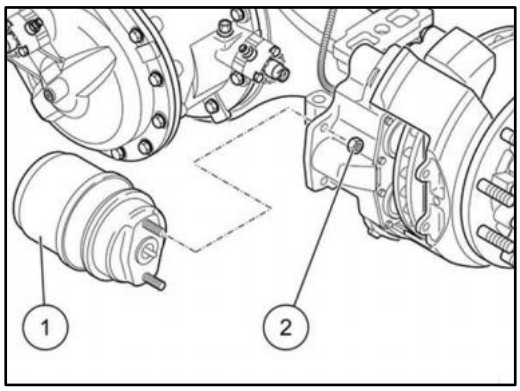

Installation steps

1. Install the brake chamber ① onto the brake along the indicated route.
2. Apply an appropriate amount of threadlocker to the air chamber screw rod.
3. Install the spring washer and nut ② onto the air chamber screw rod in sequence, tighten the nut using a 24mm sleeve, with a torque range of 200 ± 10Nm and an actuating torque of 200Nm.

Auxiliary material: Loctite 243 threadlocker

Note: With 6880/6881 air chamber ventilation hole facing upwards and away from the axle housing side; 6883/6884 air chamber ventilation hole facing upwards and leaning towards the axle housing.

Install the brake lining

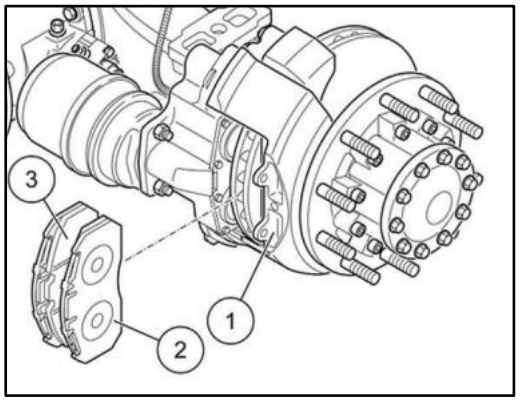

Installation steps

1. Install the brake lining onto the brake along the indicated route.

Install the pressing plate

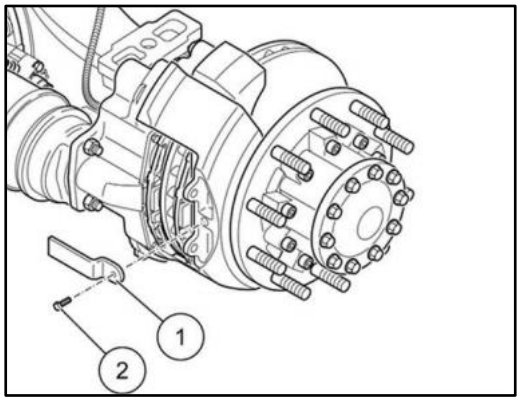

Installation steps

1. Apply threadlocker to the bolt. Thread the bolt through the brake lining pressing plate, and install it onto the brake following the indicated route.
2. Tighten the bolt using an 18mm sleeve, with a torque range of 40±5Nm and an actuating torque of 40Nm.

Auxiliary material: Loctite 243 threadlocker

Adjustment of brake clearance

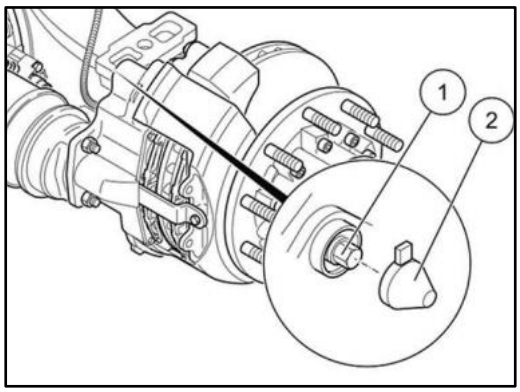

Operational steps

1. Push the caliper body inward by hand to concentrate the brake clearance to the inside.
2. Open the protection cap and adjust the manual adjusting shaft using a tooling (clockwise to decrease the brake clearance; counterclockwise to increase the brake clearance).
3. Choose the feeler leaf with appropriate thickness and insert it between the brake lining and the brake disc. Measure the initial brake clearance. If the clearance is too large or too small, adjust the manual adjusting shaft. until the initial clearance is within the acceptable range of 1.7-2.3mm.
4. Cover the protection cap to ensure cleanliness inside the brake.

Note: When adjusting, start by increasing the initial clearance to prevent the manual adjusting shaft from getting stuck at the extreme position.

Remove brake lining

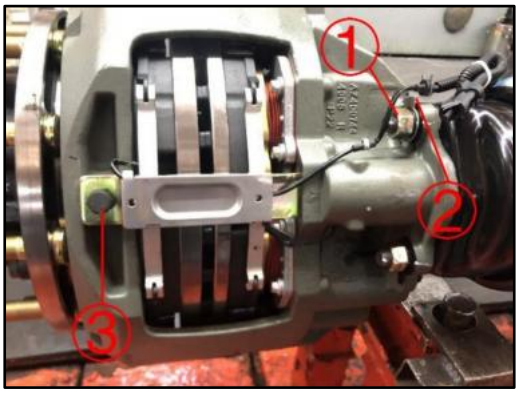

Removal steps

1. Remove the internal and external connectors of the alarm wiring harness; loosen the air chamber connecting nut ① using a 24mm sleeve, remove the alarm wiring harness end clamp ②, elastic pad, and the connecting nut.
2. Loosen the brake lining pressing plate nut ③ using an 18mm sleeve, and pull out the brake lining along with the inner line of the wear alarm from the brake caliper.

Remove alarm wiring harness

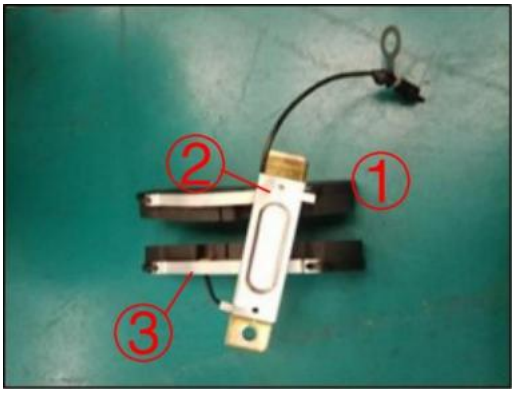

Removal steps

1. Remove the brake lining pressing plate ① from the wear alarm cover plate ②. Remove the brake lining spring leaf ③ and remove the inner wire head of the wear alarm from the brake lining fixing groove.

Install alarm wiring harness



Installation steps

1. Install the new friction wear alarm inner wire head ① into the brake lining fixing groove ②, and reset the brake lining spring leaf. Insert the brake lining pressing plate into the wear alarm cover plate.

Install the brake lining

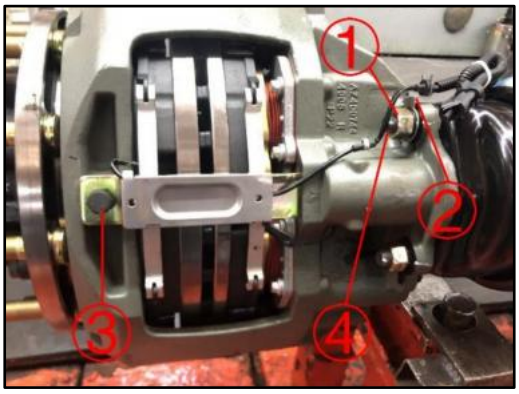

Installation steps

1. Insert the assembled brake lining into the brake caliper. Apply threadlocker to the pressing plate bolt ③. Thread the brake lining pressing plate bolt (M12*25) through the pressing plate and tighten it into the thread of the brake using an 18mm sleeve, with a torque range of 40 ±5Nm and an actuating torque of 40Nm.
2. Apply threadlocker to the brake chamber screw rod ④. Thread the alarm wiring harness end clamp ② through the brake chamber screw rod and connect the inner and outer wire connectors. Install the elastic pad and the connecting nut ②. Tighten the air chamber connecting nut ① using a 24mm sleeve, with a torque range of 200 ± 10Nm and an actuating torque of 200Nm .

Auxiliary material: Loctite 243 threadlocker

Note: After replacing the brake lining, it is necessary to re-measure the initial clearance, with an actuating clearance of 1.7-2.3mm. Refer to disc brake clearance adjustment steps.

Others

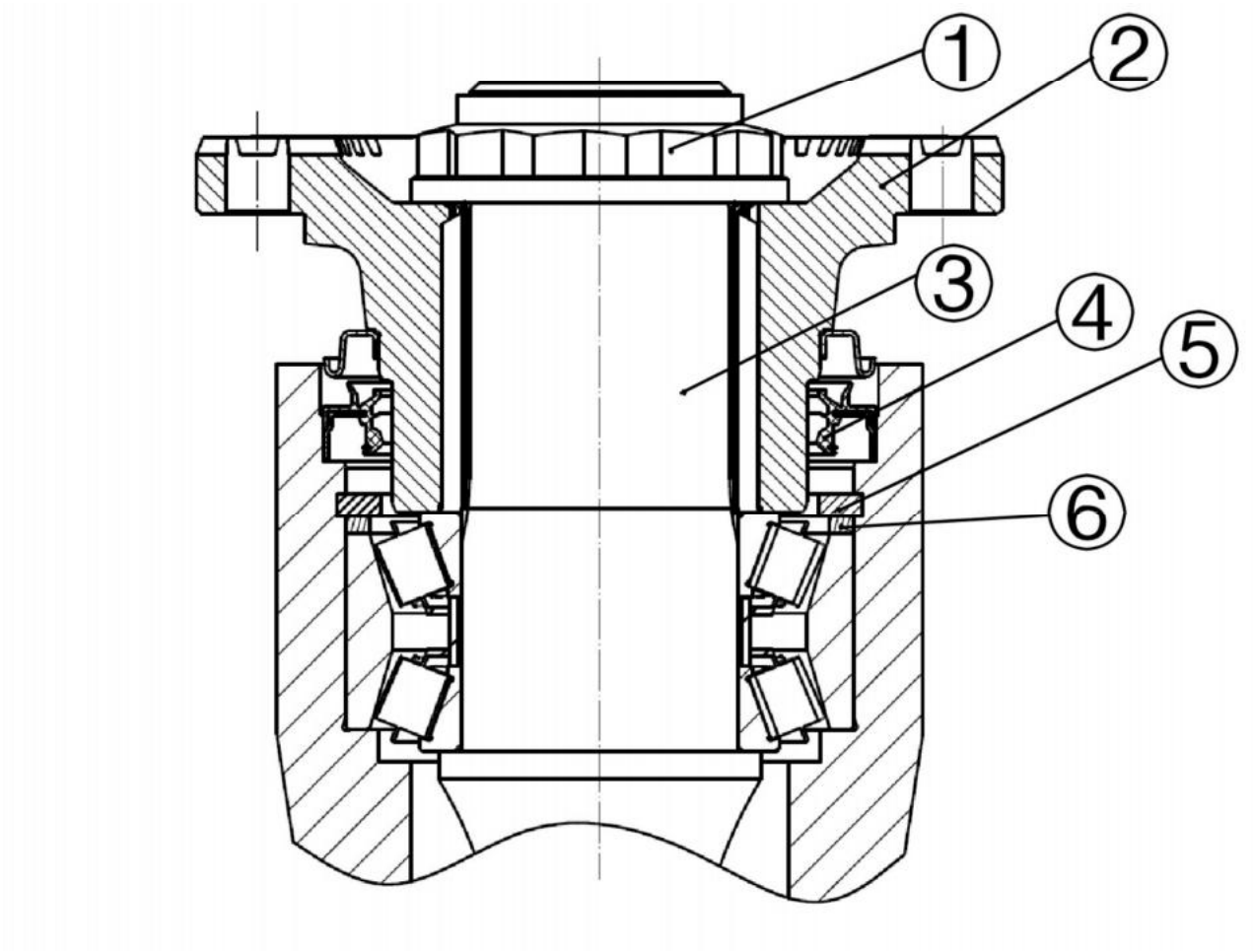

1. Locknut 2. Flange 3. Through shaft 4. Oil seal 5. Internal circlip 6. Adjusting washer

Remove the output flange

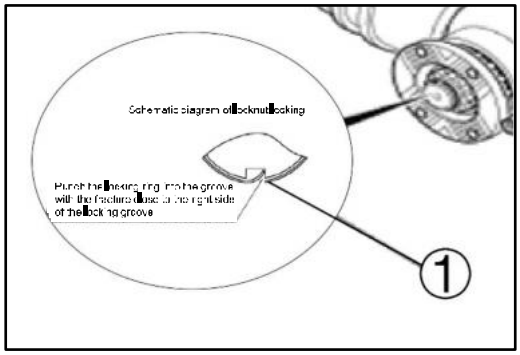

Removal steps

1. Restore the locking position of the locknut ①, and use a special socket tool (KQ6802-1113) to remove the locknut.
2. Remove the output flange from the through shaft.
3. Screw the locknut into the through shaft to protect the threads.

Remove the oil seal



Removal steps

1. Use a tool to hook the oil seal ① and remove it from the axle housing.

Remove the adjusting washer

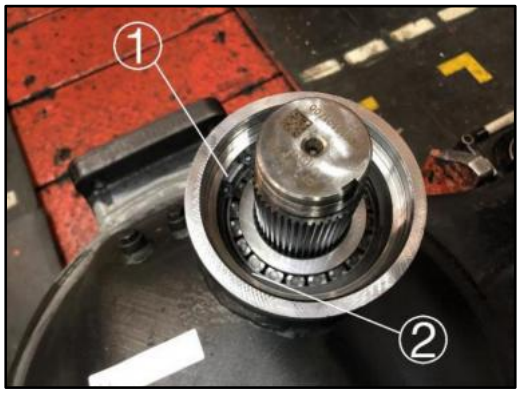

Removal steps

1. Use internal circlip pliers to remove the circlip ② and adjusting washer ①.
2. Use the tooling to reset the through shaft spline, and lift out the through shaft.

Remove the through Shaft



Removal steps

1. Take out the through shaft ① from the axle housing chamber.

Remove the bearing

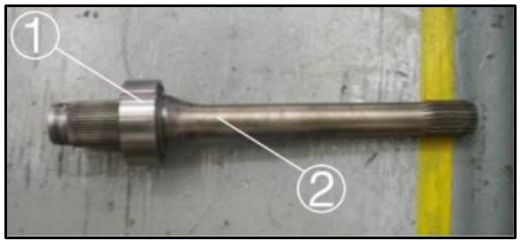

Removal steps

1. Use hydraulic puller and clamping device to separate bearing ② from through shaft ①.

Install the through Shaft



Assembly steps

1. Insert the through shaft ① into the axle housing chamber, align the through shaft spline with the differential half axle gear, and use the through shaft tooling punch (QX6807-1055) to drive the through shaft into the axle housing.

Press the through shaft



Assembly steps

1. Use hammer and tooling ① (QX6807-1055) to install the through shaft into the through shaft hole ②, and ensure proper installation.

Install the adjusting shim and circlip

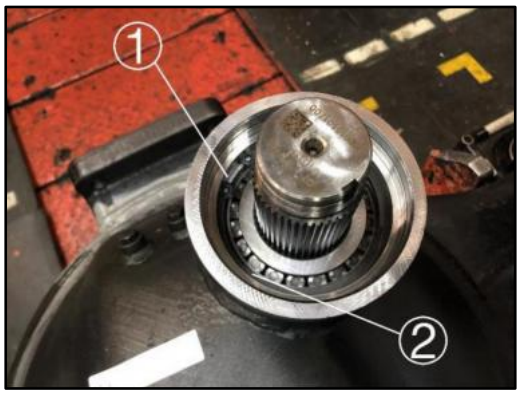

Assembly steps

1. Place the adjusting washer ① into the through shaft hole.
2. Use internal circlip pliers to tighten the circlip, and fit the circlip ② with the circlip groove in the through shaft hole.

Note: Ensure that the circlip is fully expanded and plays a fixing role.

Install the oil seal



Assembly steps

1. Apply 2# automotive universal lithium grease to the oil seal lip by hand; place it in the through shaft hole.
2. Use the oil seal tooling (QX6807-1051M) to press the oil seal ① to the bottom.

Auxiliary material: Great Wall 2#lithium base grease

Note: Check if the oil seal lip is intact and has 2#lithium base grease, and if the spring is intact; distinguish between the front and back sides of the oil seal.

Install the output flange



Assembly steps

1. Align the output flange ① with the through shaft, and insert it into the through shaft hole.
2. Rotate the flange to check if it rotates flexibly.

Note: The mating surface between the output flange and the oil seal should be kept clean.

Tighten the locknut

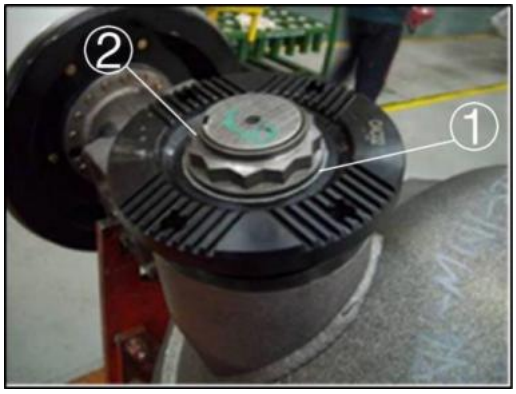

Operational steps

1. Apply flange sealant on the contact surface ① between the output flange and the locknut.
2. Use a special socket tool (KQ6802-1113) to tighten the locknut ②, with a torque range of 950 ± 50Nm and an actuating torque of 950Nm.

Auxiliary material: Loctite 1596 flange sealant

Lock the locknut

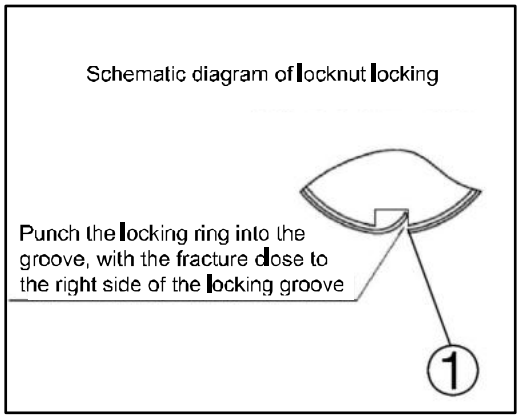

Operational steps

1. Use a chisel to punch the locknut locking ring ① into the groove.

Note: The fracture of the locknut is close to the right side of the locking groove.

Remove the vent valve



Removal steps

1. Use a 21-23mm open end wrench to remove the vent valve ①.

Install the vent valve

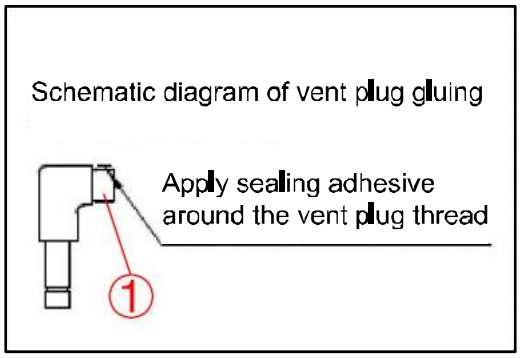

Installation steps

1. Apply sealing adhesive around the vent valve thread ①.
2. Use a 21-23mm open end wrench to tighten the vent valve.

Auxiliary material: Loctite 1596 flange sealant

Remove the L-shaped support plate

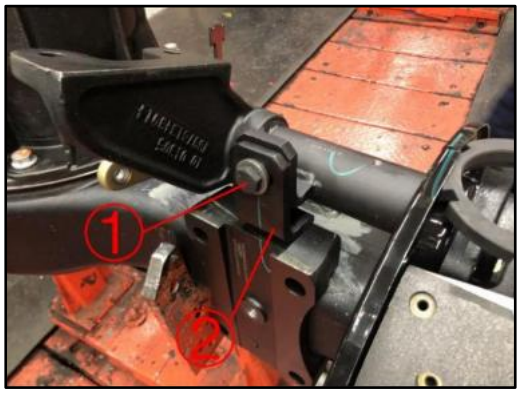

Removal steps

1. Use a 24mm sleeve to remove the connecting bolt ① (M16*1.5) and remove the L-shaped support plate ②.

Note: If the L-shaped support plate has been welded, the welding points need to be polished using an angle grinder.

Install the L-shaped support plate

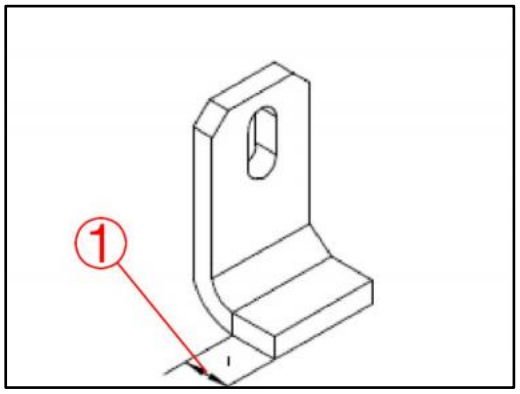

Installation steps

1. Apply threadlocker to the bolt (M16*1.5); connect the L-shaped support plate to the brake chamber sleeving, and tighten the connecting bolt using a 24mm sleeve, with a torque range of 295-310Nm.
2. Weld the L-shaped support plate, and weld area ①, with a weld seam height of ≈ 10mm.

Auxiliary material: Loctite 271 threadlocker

Remove the internal filter



Removal steps

1. Use a 13mm sleeve to remove the hexagon bolt with flange ① (M 8*10); remove the oil/fuel filter ②.

Install the internal filter

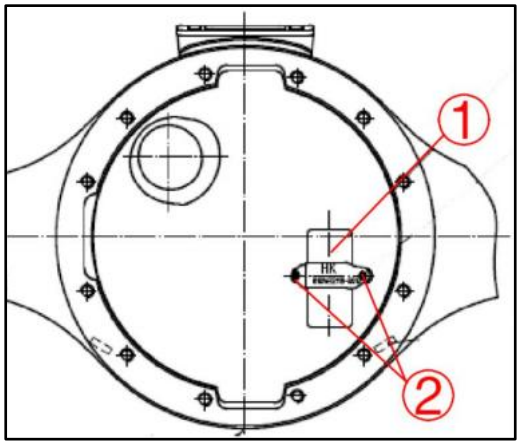

Installation steps

1. Thread the hexagon bolt with flange ② (M 8*10) through the oil/fuel filter ①, and connect it to the axle housing thread. Use a 13mm sleeve to tighten the bolt, with a torque range of 22 ± 3Nm.

Note: The large hole of the oil/fuel filter faces the axle housing oil drain plug.

Remove the air chamber bracket bolt



Removal steps

1. Use a 19mm sleeve to remove the air chamber bracket connecting bolt ①; remove the bolt and gasket.

Install the air chamber bracket bolt

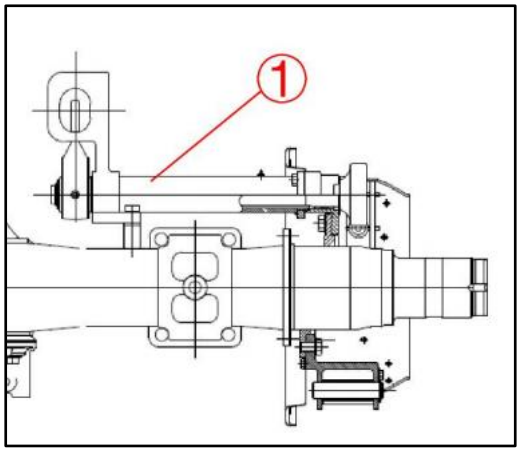

Installation steps

1. Apply threadlocker to bolt ①; insert the gasket into the bolt, thread it through the air chamber bracket, and screw it into the axle housing thread.

2. Use a 19mm sleeve to tighten the air chamber bracket connecting bolt, with a torque range of 146-178Nm and an actuating torque of 170Nm.

Auxiliary material: Threadlocker

Note: After tightening the connecting bolt, please manually pull the brake adjusting arm to check the flexibility of the adjusting arm brake; if the adjusting arm brake is stuck, additional adjusting shims need to be added.

Remove the external oil filter

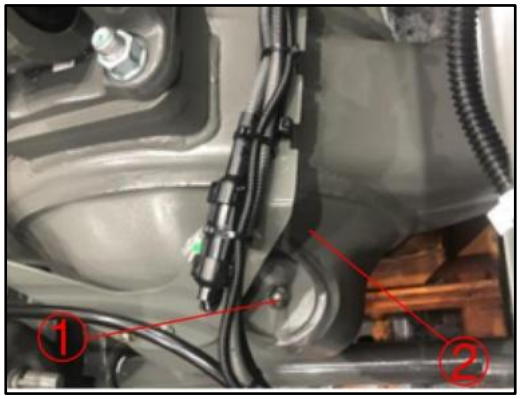

Removal steps

1. Use a 21mm hexagon socket to remove the external oil filter ①, and remove it from the axle housing ②.

Install the external oil filter

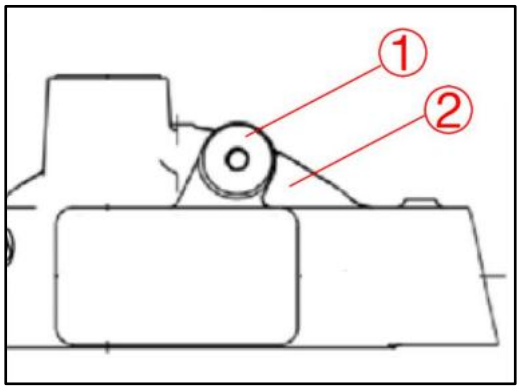

Installation steps

1. Install the external oil filter ① into axle housing ② mounting hole, and manually screw it by 2-3 threads; use a 21mm hexagon socket to tighten it, with a torque range of 50 ± 10Nm and an actuating torque of 50Nm.

Remove the joint bearing

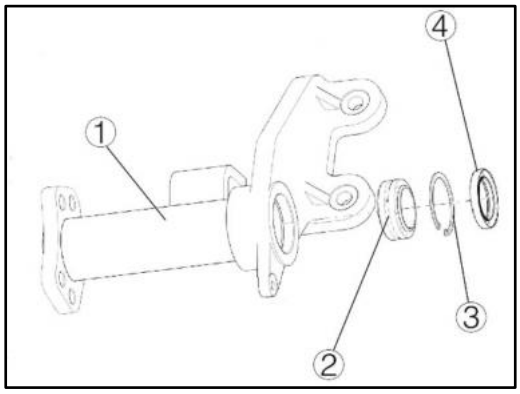

Removal steps

1. Use a tool to remove the oil seal ④ from the air chamber bracket ①; use circlip pliers to remove the internal circlip ③ from the air chamber bracket ①; use a dismantling tool to remove the joint bearing ② from the air chamber bracket ①.

Install the joint bearing

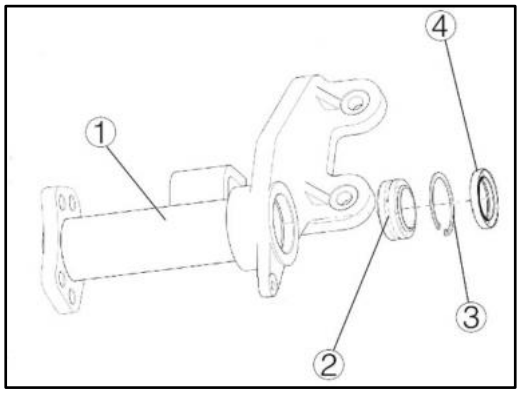

Installation steps

1. Use a pressure head to press the joint bearing ② into the air chamber bracket ① mounting hole, and check whether the joint bearing rotates flexibly; use circlip pliers to install the internal circlip ③ into the air chamber bracket circlip groove; apply grease to the oil seal ④ lip, and install it into the air chamber bracket mounting hole using a tooling.

Auxiliary material: 2# general automotive lithium grease

Note: The flat side of the oil seal frame faces the joint bearing.

MCY13 Rear drive axle



SINOTRUK INTERNATIONAL

After-sales Service Department

Contents

Assembly.....1

Final drive and differential.....19

Drum-type wheel end.....51

Drum-type brake.....69

Disc wheel end.....93

Disc brake.....105

Others.....122

Assembly

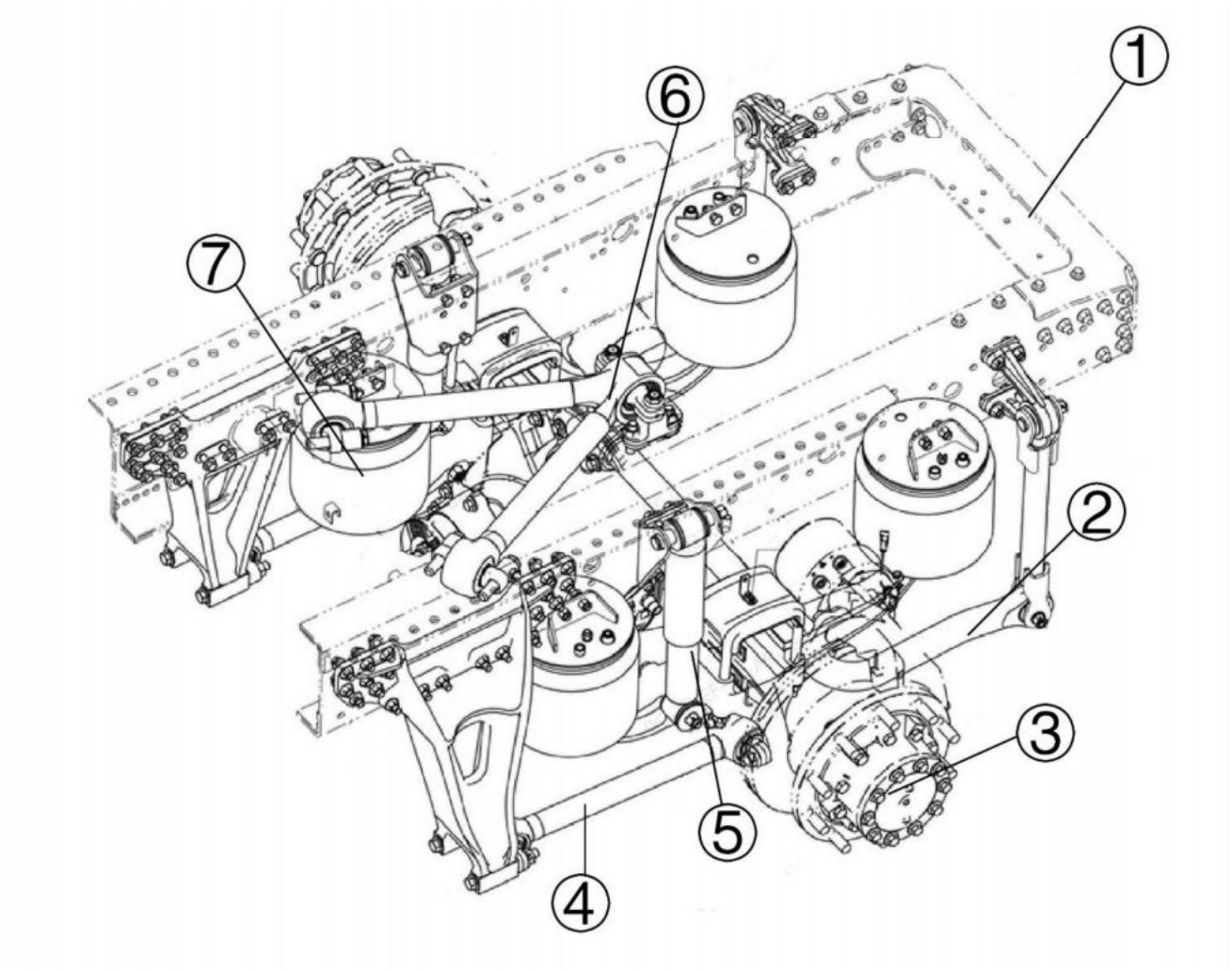

1. Chassis 2. Rear stabilizer bar 3. Drive axle 4. Lower thrust rod 5. Shock absorber 6. V-thrust lever 7. Air bag

Remove the tire



Removal steps

1. Remove the wheel screw nut ① (M22 * 1.5) using a 32mm sleeve and remove the tire assembly ②.

Note: Before removal, please take necessary safety measures and use double jacks to fix the chassis for single wheel.

Remove the V-thrust lever

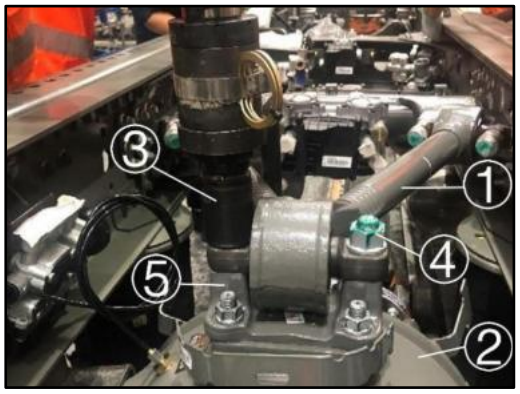

Removal steps

1. Fix one end of the V-thrust lever ① connected to the drive axle ② using a chain; use a 36mm sleeve ③ to remove the V-thrust lever connecting nut ④ (M24*2), and separate the V-thrust lever from the V-rod holder ⑤.

Remove the drive shaft

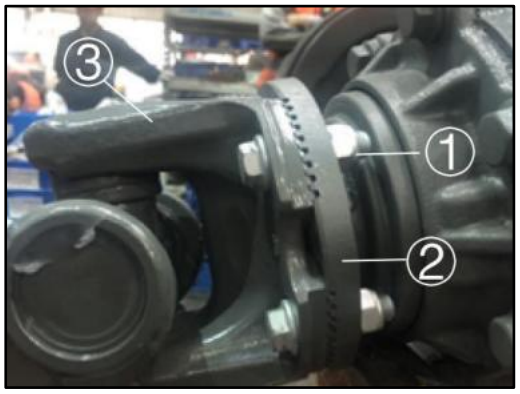

Removal steps

1. Use an 18mm sleeve to disassemble the connecting bolt ① (M14*50) to separate the drive shaft ③ from the flange ②.

Remove the brake flexible hose



Removal steps

1. Use a 24mm open end wrench to disassemble the brake chamber air pipe nut seat ① (NG12), to separate the air chamber ② from the brake pipeline ③; seal the air inlet port of the chamber using a masking tape to ensure cleanliness of the inner cavity.

Remove the differential lock signal circuit

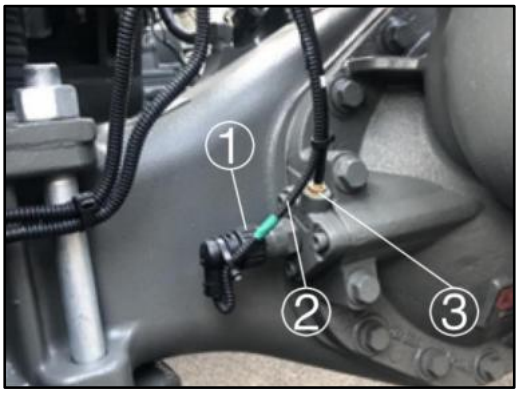

Removal steps

1. Rotate the nut ① to remove the pressure switch signal circuit ②.
2. Use a 12mm open end wrench to remove the differential locking cylinder air inlet pipe nut seat ③ (NG6); seal the air inlet port using a masking tape to ensure cleanliness of the inner cavity.

Note: Separate the ABS signal wire and wear warning signal line joints.

Remove the air bag

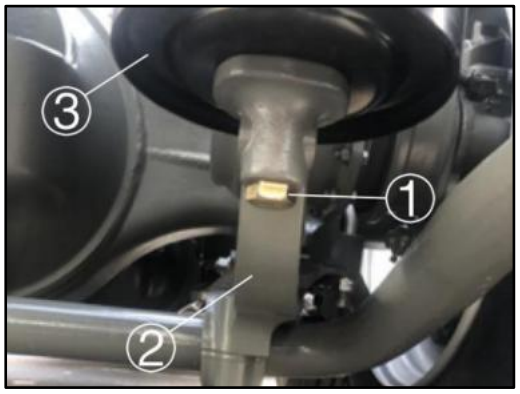

Removal steps

1. Use a 24mm sleeve to remove the air bag connecting bolt ① (M18*80) and separate the air bag ③ from the balancing beam ②.

Remove the rear stabilizer bar

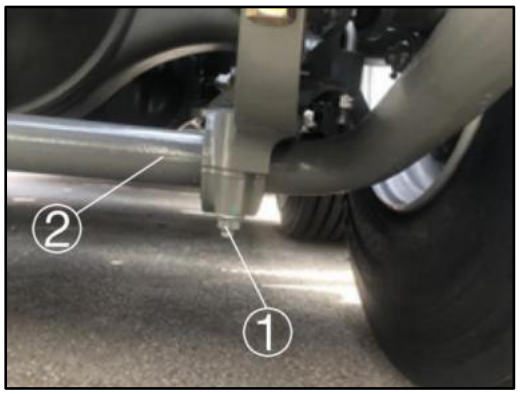

Removal steps

1. Use a 22mm sleeve to disassemble the rear stabilizer bar rubber bushing cover plate nut ① (M16*1.5), and remove the stabilizer bar ②.

Remove the shock absorber

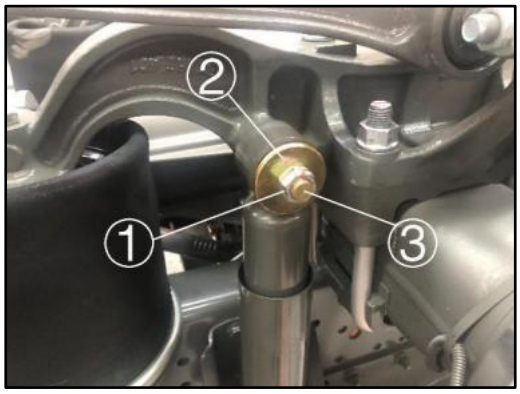

Removal steps

1. Use a 27mm sleeve to disassemble the shock absorber connecting nut ① (M18*1.5), and remove the gasket ② and the axis pin ③.

Remove the lower thrust rod

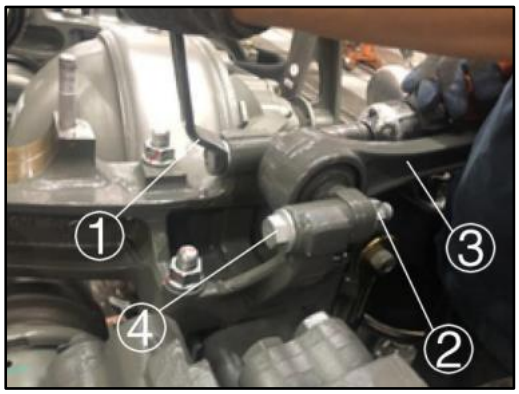

Removal steps

1. Use a 24mm box wrench ① to fix bolt ④ (M18*110), and use a 27mm sleeve to remove nut ② (M18*1.5); remove the lower thrust rod ③.

Remove the balancing beam

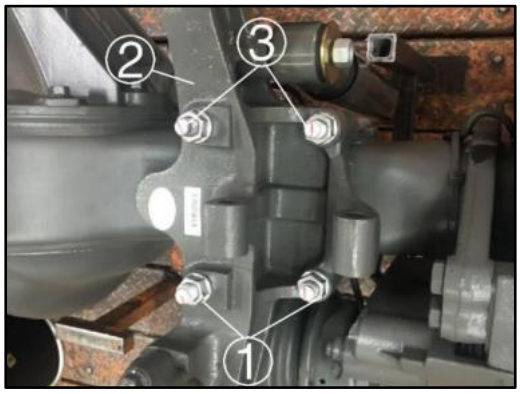

Removal steps

1. Use a 30mm sleeve to disassemble the balancing beam connecting flange nut ① (M18*1.5), and remove the balancing beam ②, U-bolt ③, and rear axle pressing plate.

Note: Please take safety measures, and use jack and chain block to pull the drive axle assembly out of the chassis.

Install the balancing beam

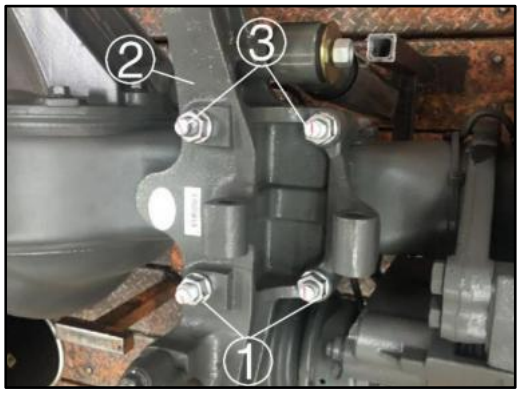

Installation steps

1. Connect the balancing beam to the axle housing fixing groove ; use U-bolt ③ to thread through the rear axle pressing plate, and connect the axle housing to the balancing beam ②; apply anti seize lubricant to U-bolt thread; use a 30mm sleeve to tighten the flange nut ① (M18*1.5), with a torque range of 450 ± 30Nm, and an actuating torque of 450Nm.
2. Use the jack and chain block to move the drive axle under the chassis, in corresponding mounting position.

Auxiliary material: HQTS H767 high-temperature anti-seize agent

Install the lower thrust rod

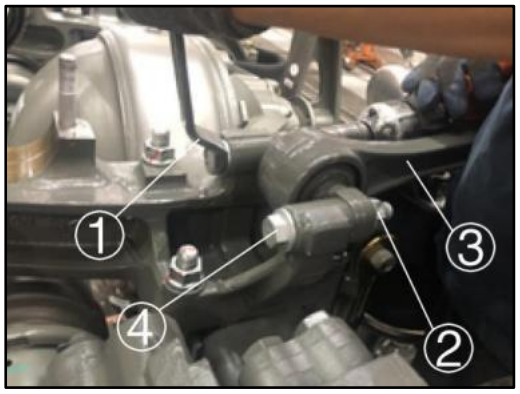

Installation steps

1. Connect the lower thrust rod and the balancing beam in series using the bolt ④ (M18*110), with the bolt thread facing vehicle travel direction. Apply anti seize lubricant to the thread, and screw it in nut ② (M18*1.5).
2. Use a 24mm box wrench ① to fix the bolt (M18*110), and tighten the nut (M18*1.5) using a 27mm sleeve, with a torque range of 440 ± 17Nm and an actuating torque of 440Nm.

Auxiliary material: HQTS H767 high-temperature anti-seize agent

Install the shock absorber

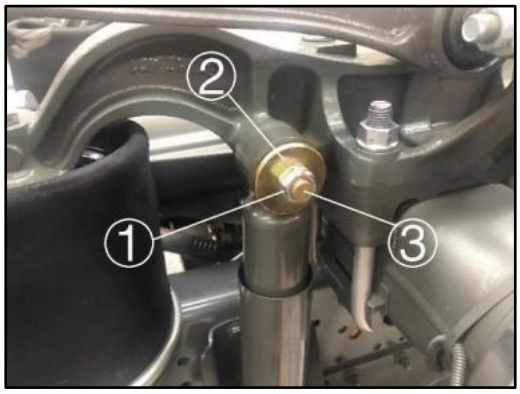

Installation steps

1. Thread the axis pin ③ through the balancing beam mounting hole, and connect it to the shock absorber; insert gaskets ② at both ends of the axis pin, and apply threadlocker to the threads, then screw it in the connecting nut ① (M18*1.5).
2. Use a 27mm sleeve to tighten the nut, with a torque range of 280 ± 10% Nm and an actuating torque of 280Nm.

Auxiliary material: Loctite 271 threadlocker

Install the rear stabilizer bar

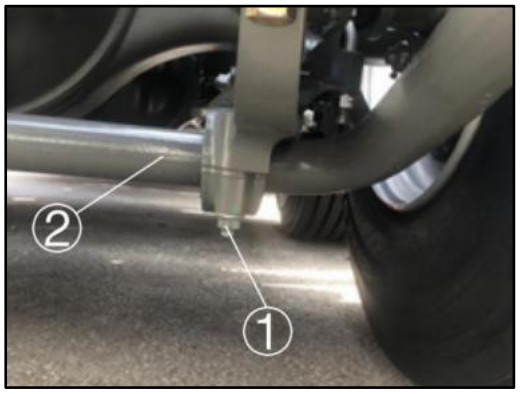

Installation steps

1. Connect the lateral stabilizer bar ② to the balancing beam, adjust the position of the rubber bushing, cover the cover plate, apply threadlocker to the double end bolt threads, and screw it in the nut ① (M16*1.5).
2. Use a 22mm sleeve to tighten the nut, with a torque range of 280±10Nm and an actuating torque of 280Nm.

Auxiliary material: Loctite 271 threadlocker

Install the air bag

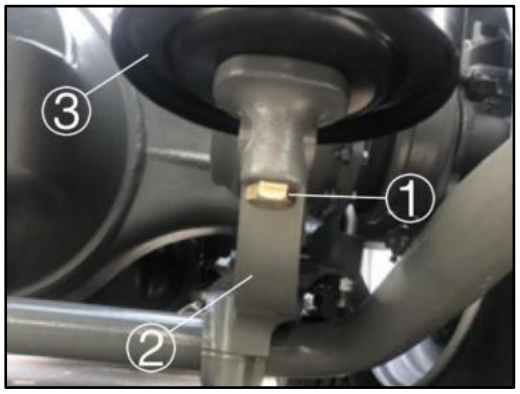

Installation steps

1. Apply threadlocker to the bolt ① (M18*80) thread, and thread the bolt through the balancing beam ② and connect it to the air bag ③.

2. Use a 27mm sleeve to tighten the bolt, with a torque range of 270 ± 10% Nm and an actuating torque of 270Nm.

Auxiliary material: Loctite 271 threadlocker

Install the differential lock signal circuit

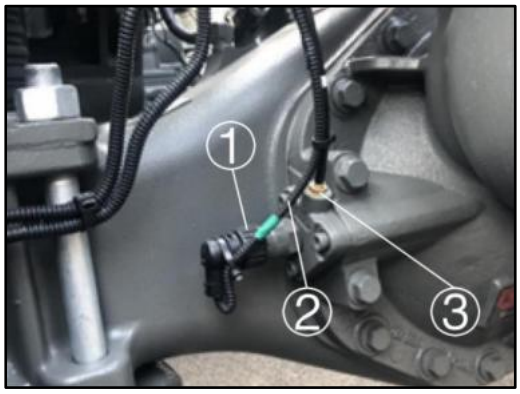



Installation steps

1. Align the signal circuit ② pin with your hand and rotate the nut ① to connect the nut to the pressure switch.

2. Remove the sealing masking tape from the air inlet port, use a 12mm open end wrench to tighten air inlet pipe nut seat ③ (NG6), with a torque range of 5 ± 1Nm and an actuating torque of 5Nm.

Note: Connect the ABS signal wire and wear warning signal line joints and check if the signal circuit and air pipe function normally; if the nut seat components fall off or deform during installation, it is necessary to separate the air inlet pipe from the nut seat and then use special tools to assemble the nut seat: assembling tool ④, nut seat ⑤, circlip ⑥, rubber washer ⑦.

Install the brake flexible hose





Installation steps

1. Remove the air chamber ② air inlet port sealing masking tape. Use a 24mm open end wrench to tighten the pipe nut seat ① (NG12), with a torque range of 15 ± 1Nm and an actuating torque of 15Nm; connect the air chamber to the brake pipeline ③.

Note: If the nut seat components fall off or deform during installation, it is necessary to separate the air inlet pipe from the nut seat and then use special tools to assemble the nut seat: assembling tool ④, nut seat ⑤, circlip ⑥, rubber washer ⑦.

Install the drive shaft

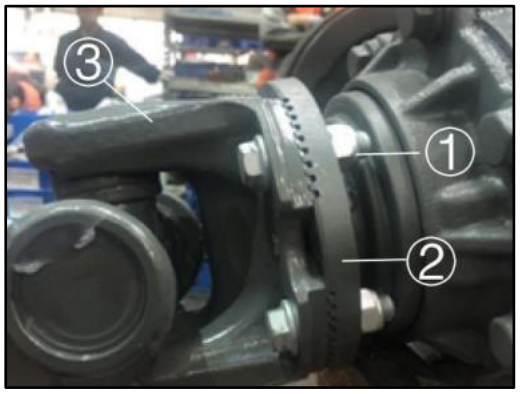

Installation steps

1. Align the drive shaft ③ with the flange ②, and use bolt ① (M14 * 50) to connect them; apply threadlocker to the thread, screw it in the nut, and use an 18mm sleeve to symmetrically tighten the bolt, with a torque range of 185-210Nm and an actuating torque of 200Nm. Auxiliary material: Loctite 271 threadlocker

Install the V-thrust lever

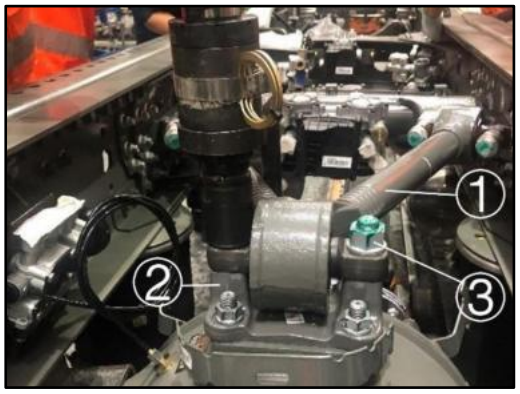

Installation steps

1. Connect the V-thrust lever ① mounting hole to the V-rod holder ② double end stud, and remove the fixed chain. Apply threadlocker to the thread, and use a 36mm sleeve to tighten nut ③ (M24*2), with a torque range of 960 ± 144Nm and an actuating torque of 960Nm. Auxiliary material: Loctite 271 threadlocker

Install the tire

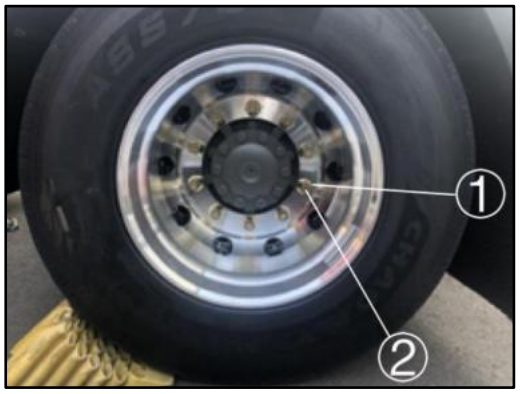

Installation steps

1. Install the matching tire onto the drive axle assembly, screw the wheel nut ① (M22*1.5) onto the wheel bolt ②, and use a 32mm sleeve to symmetrically tighten the wheel nut, with a torque range of 575 ± 25Nm and an actuating torque of 575Nm.

Note: After replacing the drive axle assembly, it is necessary to perform four-wheel alignment again to ensure stable car travel.

Final drive and differential

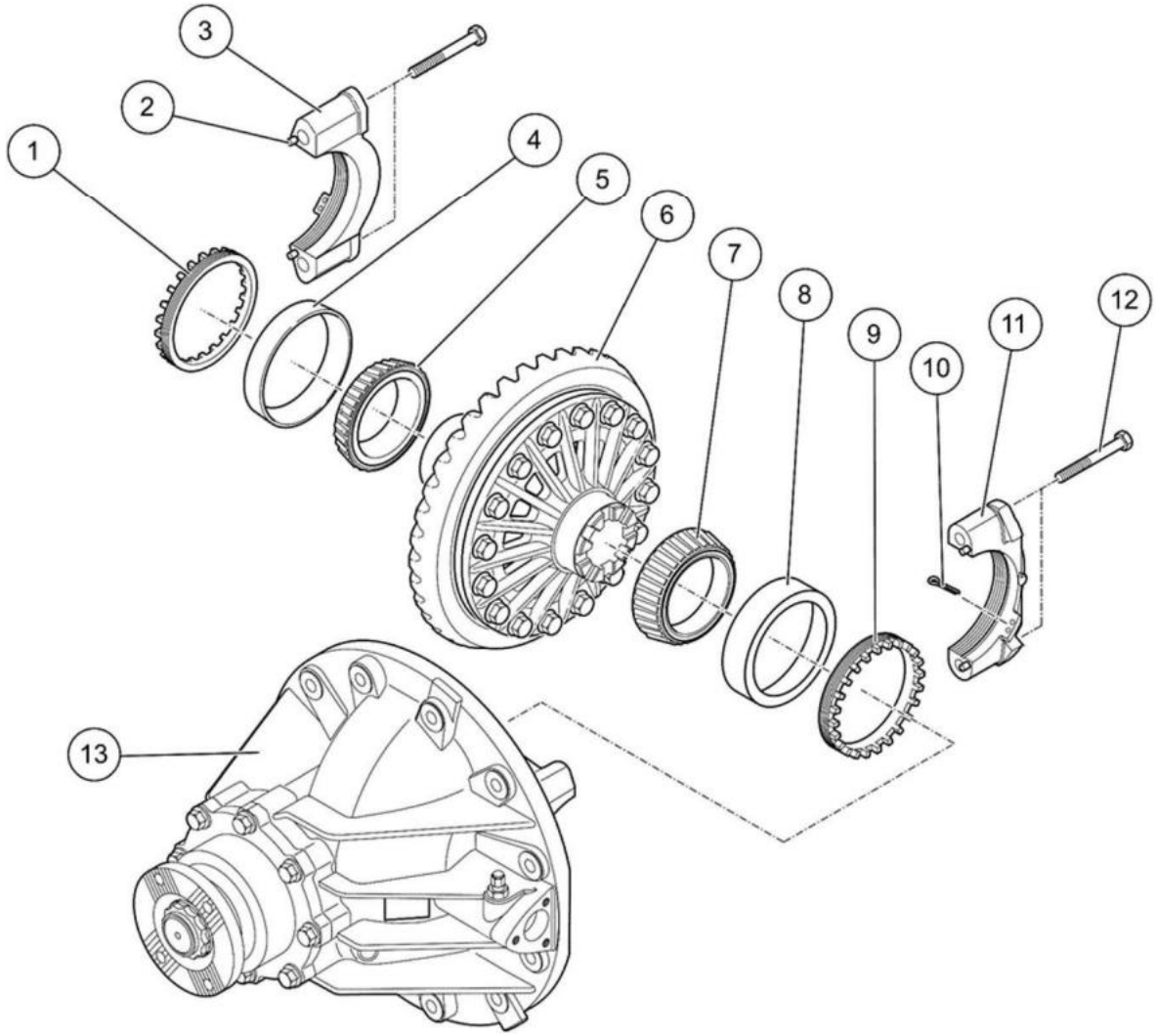

1. Adjusting nut 2. Positioning pin 3. Bearing cap 4. Bearing outer ring 5. Bearing 6. Passive wheel 7. Bearing 8. Bearing outer ring 9. Adjusting nut 10. Split pin 11. Bearing cap 12. Bolt 13. Final drive housing

Remove the final drive assembly

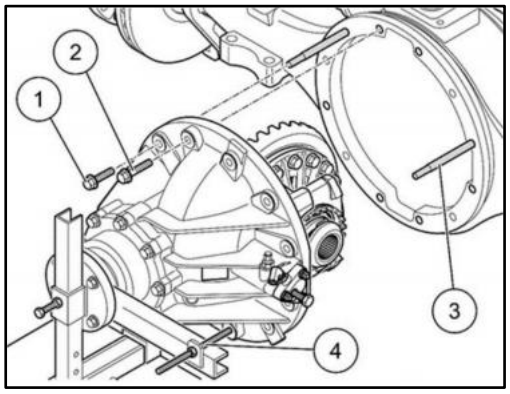

Removal steps

1. First, remove the half axle, and follow the steps for removing wheel end half axle.
2. Connect the final drive input flange to the disassembly bracket ④ using bolts.
3. Use a 22mm sleeve to sequentially remove the final drive short bolt ① and long bolt ②; install the guide bolt ③ onto the axle housing; remove the final drive assembly from the axle housing.

Note: Distinguish the mounting position of final drive connecting bolt; use long bolt (M16*1.5*50) for the final drive with high convex plate, and short bolt (M16*1.5*40) for the rest.

Remove the cylinder

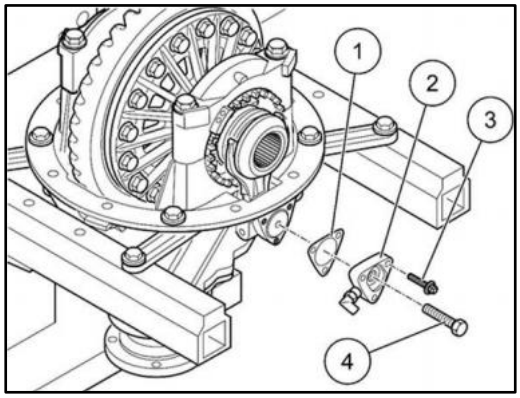

Removal steps

1. Reverse the final drive assembly.
2. Use a T-45 sleeve to loosen the cylinder connecting bolt ③ (M8*35).
3. Remove cylinder ② and sealing gasket ①.

Remove the shift fork rod

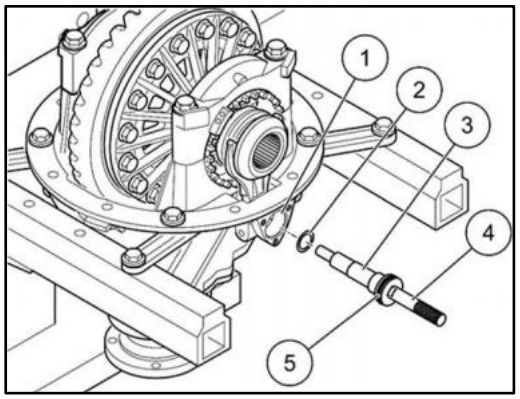

Removal steps

1. Connect tool bolt ④ (M8*35) to fork shaft ③.
2. Pull out the fork shaft ③, sealing ring ⑤ and adjusting washer ② from the fork shaft hole ①.

Remove the shift fork and meshing sleeve

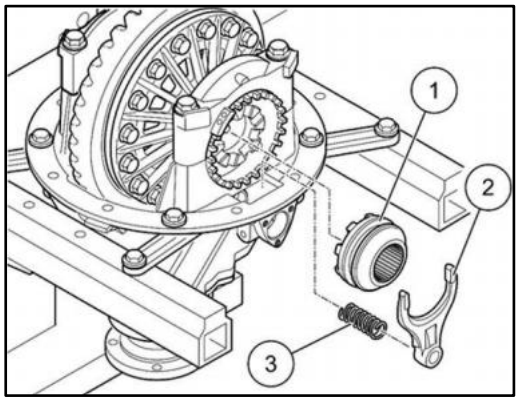

Removal steps

1. Pull the shift fork ② to take out the meshing sleeve ①.
2. Take out the fork shaft spring ③.

Remove the bearing cap

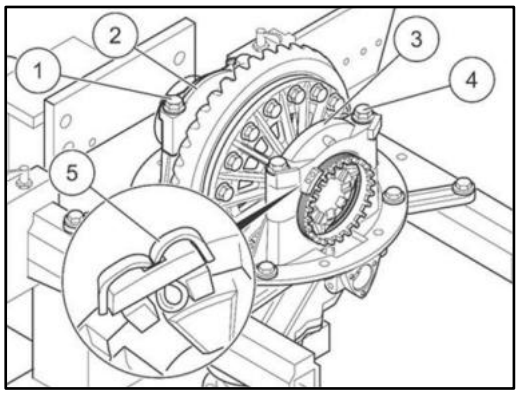

Removal steps

1. Use pliers to remove the split pin ⑤; use a special socket tool to remove the adjusting nut.
2. Use a 22mm sleeve to remove the bearing cap connecting bolts ① and ④ (M20*110), and remove the bearing cap ② and ③.

Note: Mark the bearing cap to distinguish left and right.

Remove the passive wheel

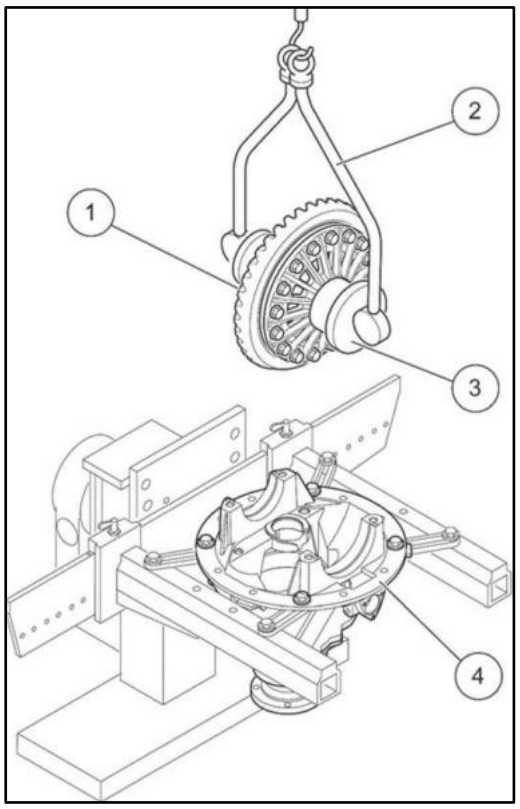

Removal steps

1. Use a lifting tool ② to lift the differential and passive wheel ①.

Remove the differential bearing

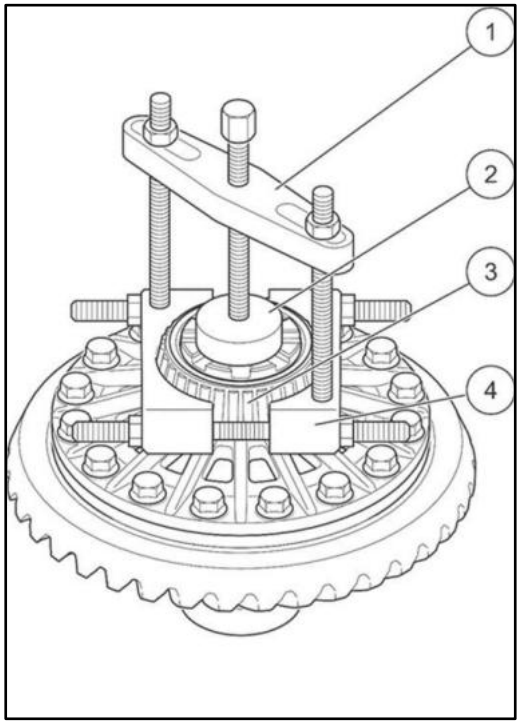

Removal steps

1. Install clamping tool ④ onto bearing ③.
2. Connect the pressure head ② to the reaction plate ①; rotate the screw rod to remove bearing ③ from the differential (same method for both sides).

Remove the upper cover

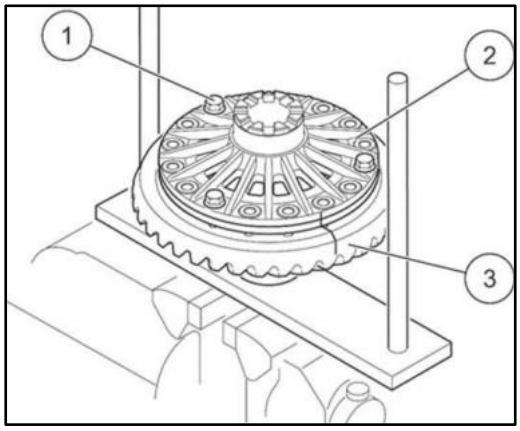

Removal steps

1. Fix the differential and passive wheel, and make a marking line ③ on the passive wheel and differential case ②.
2. Use a 24mm sleeve to remove the connecting bolt ① (M18*1.5*55); remove the upper cover.

Remove the passive wheel

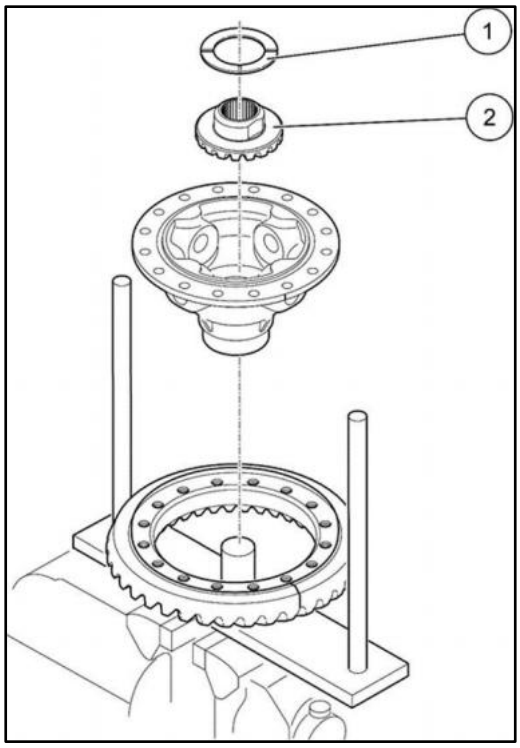

Removal steps

1. Remove the half axle gear shim ① and half axle gear ② in sequence.
2. Remove the differential case, and remove the passive wheel.

Remove the differential

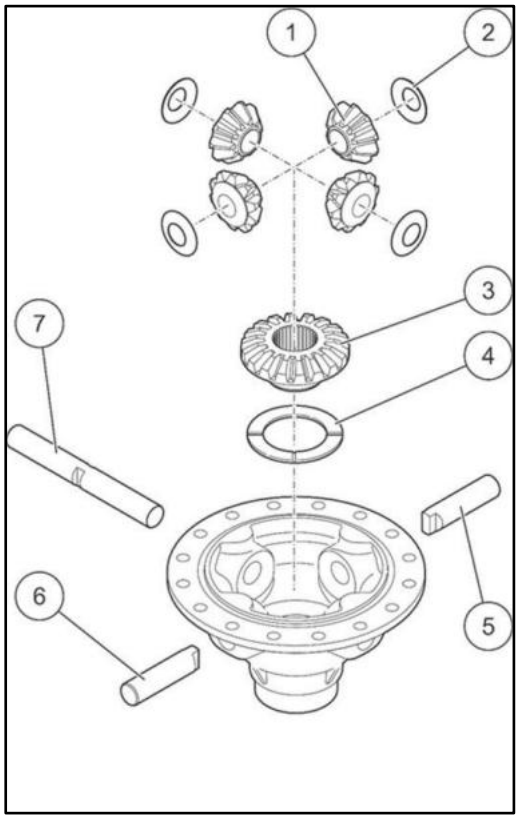

Removal steps

1. Take out the short planetary gear axles ⑤ and ⑥ from the differential; remove the connected planetary gear ① and planetary gear gasket ②.
2. Take out the long planetary gear axle ⑦ from the differential; remove the connected planetary gear ① and planetary gear gasket ②.
3. Take out the differential half axle gear ③ and the half axle gear shim ④.

Remove the drive wheel drive flange

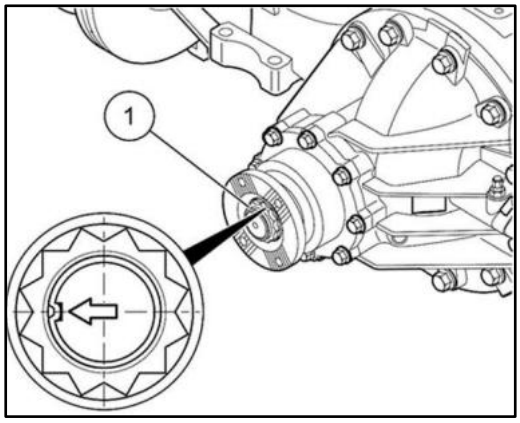

Removal steps

1. Restore the concavity of the locking nut ①.
2. Use a special socket tool (QX6802-11157) to remove the locking nut.
3. Tap or use a puller to remove the flange.

Remove the oil seal

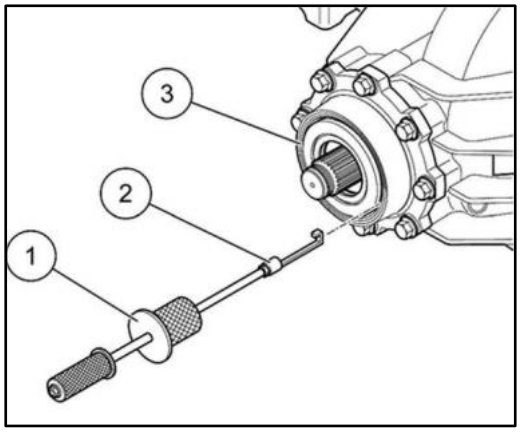

Removal steps

1. Use the oil seal disassembly tool ② to hook the oil seal ③.
2. Reciprocate the force hammer ① to remove the oil seal from the bearing seat.

Remove the drive wheel

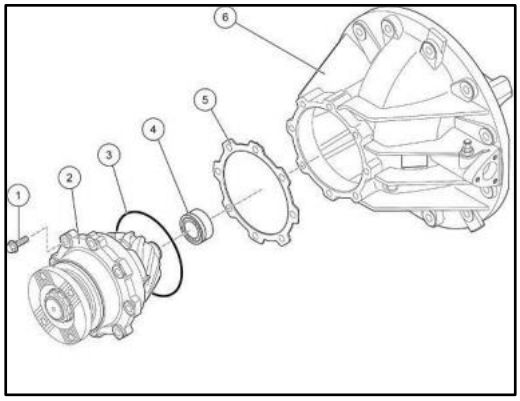

Removal steps

1. Reverse the final drive; use a 22mm sleeve to remove the connecting bolt ① (M16 * 1.5*40).
2. Remove the drive wheel ② from the final drive housing ⑥.
3. Remove the O-ring ③, locating bearing ④ and adjusting shim ⑤.

Remove the upper bearing

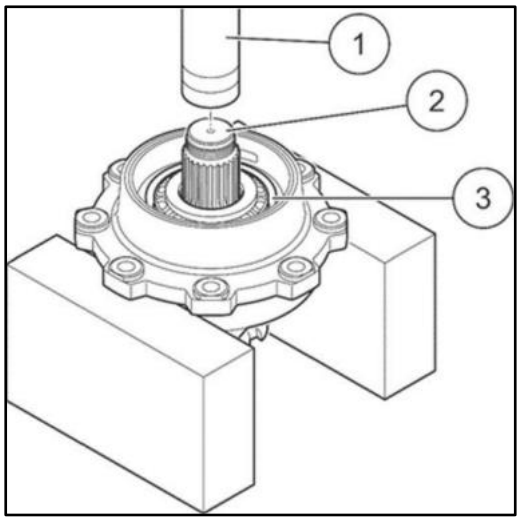

Removal steps

1. Fix the drive wheel, and press down the pressure head ① onto the threaded end ② of the drive wheel.
2. Remove the upper bearing ③, and remove the drive wheel from the bearing seat.

Remove the bearing

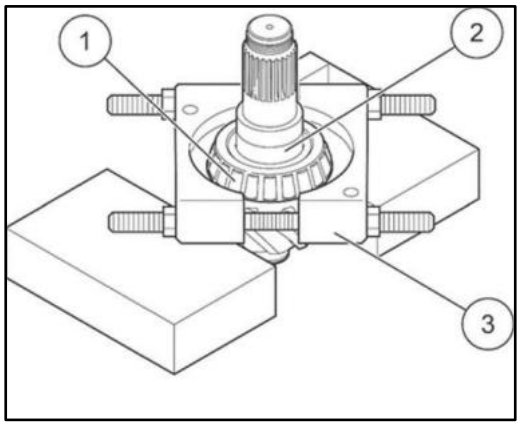

Removal steps

1. Use fixture ③ to clamp the bearing, and press down the threaded end of the drive wheel.
2. Remove the lower bearing ①.

Install the lower bearing

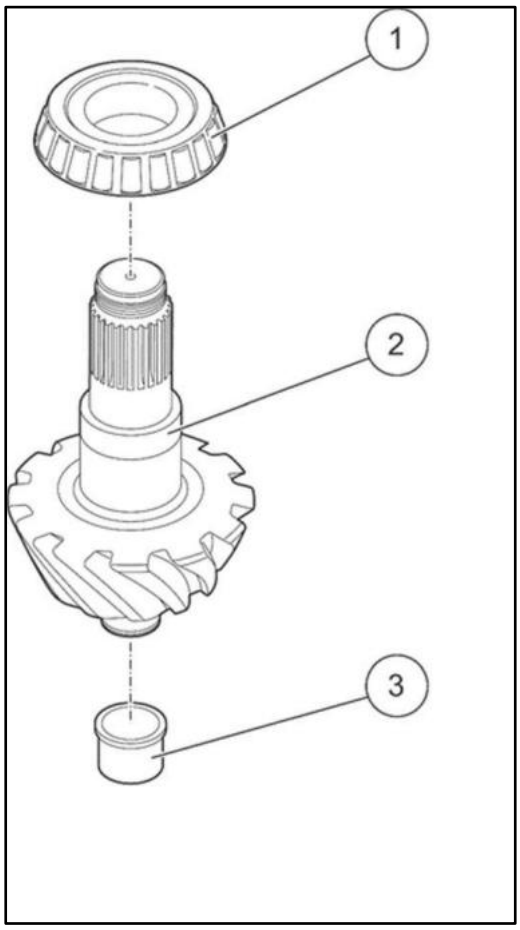

Installation steps

1. Press the lower bearing ① and locating bearing ③ onto the drive wheel shaft ②.

Note: Use a 0.02mm feeler gauge to insert into the lower side of the bearing and check if it is pressed in place.

Install the bearing outer ring

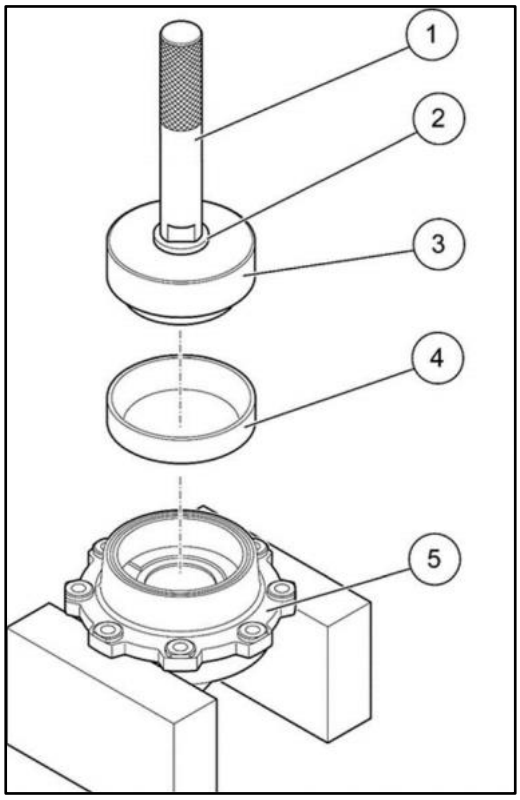

Installation steps

1. Fix the bearing seat ⑤.
2. Place the bearing outer ring ④ onto the bearing seat.
3. Press the fixture ③ to make it contact with the outer ring, and press the bearing outer ring into place.

Note: Use a 0.02mm feeler gauge to insert into the lower side of the outer ring and check if it is pressed in place.

Install the adjusting washer

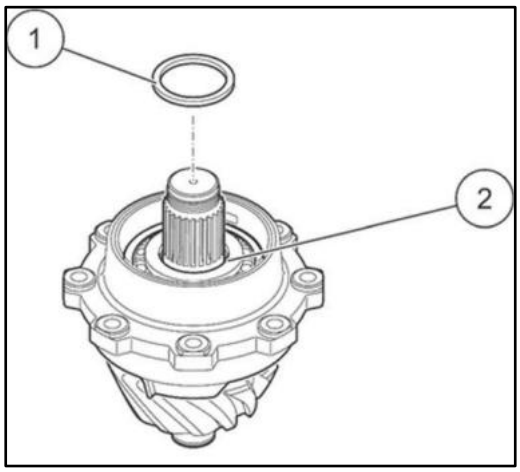

Installation steps

1. Place the bearing seat onto the drive wheel shaft ②.
2. Place the adjusting shim ① onto the drive wheel shaft.

Install the upper bearing

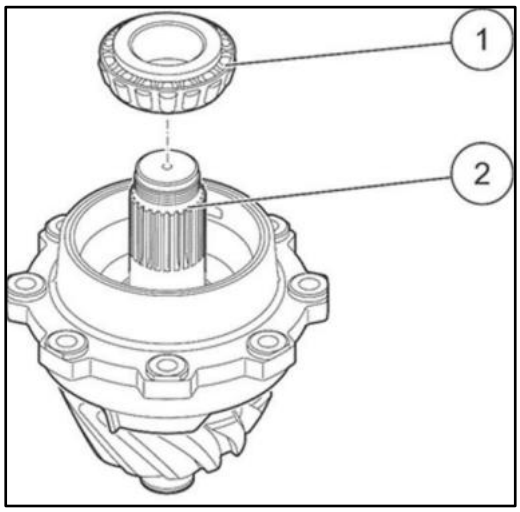

Installation steps

1. Install the tapered roller bearing ① onto the drive wheel shaft ②.
2. Install the tapered roller bearing to the bottom.

Note: Measure the bearing seat rotating torque under a pressure of 8.6 tons, with a torque range of 12 ± 4Nm. If it is out of tolerance, replace the adjusting shim and reinstall it after disassembly.

Install the oil seal and input flange

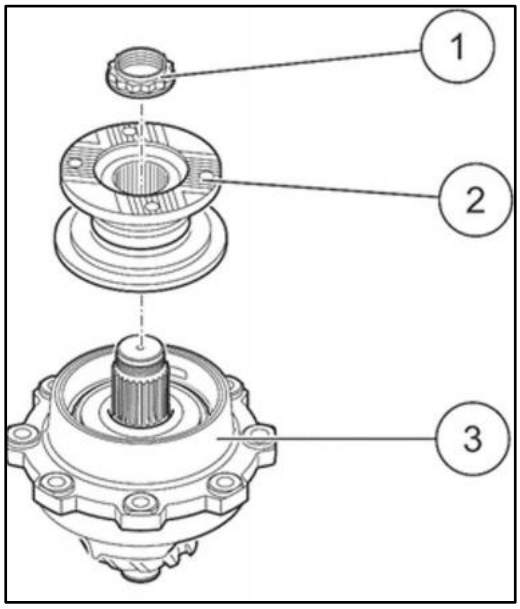

Installation steps

1. Press the oil seal into the bearing seat ③; align the input flange ② with driving bevel gear spline, and press it to the bottom; apply a circle of flange sealant to the locknut, and screw it into the locknut ①.

2. Use a special socket tool (QX6802-11157) to tighten the locknut ①, with a torque range of 900 ± 100Nm and an actuating torque of 900Nm; use a chisel to punch the locknut locking ring into the groove.

Auxiliary material: Loctite 1596 flange sealant

Note: The fracture of the locknut is close to the right side of the locking groove.

Install the differential

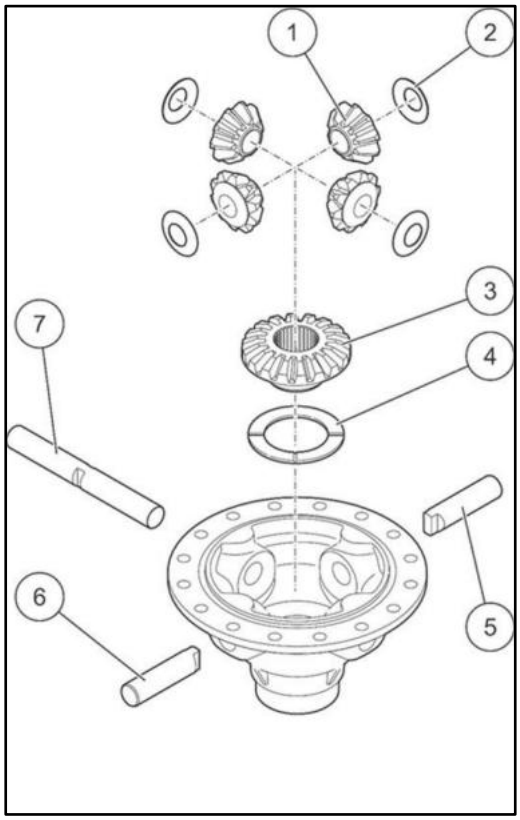

Installation steps

1. Place the half axle gear shim ④ and half axle gear ③ in the differential in sequence.
2. Place the planetary gear gaskets ② and planetary gears ① on both sides into the differential; insert the long planetary gear axle ⑦.
3. Install the gear gaskets ② and planetary gears ① on other both sides; insert the short planetary gear axles ⑤ and ⑥ on both sides.
4. Use a 1.5mm feeler gauge to insert into the clearance between one side of the planetary gear gasket and the housing. If there is obvious resistance (rotation jamming) when manually turning the planetary gear, it is considered a qualified clearance. Actuating clearance: 0.1-1.4mm.

Install the differential passive wheel

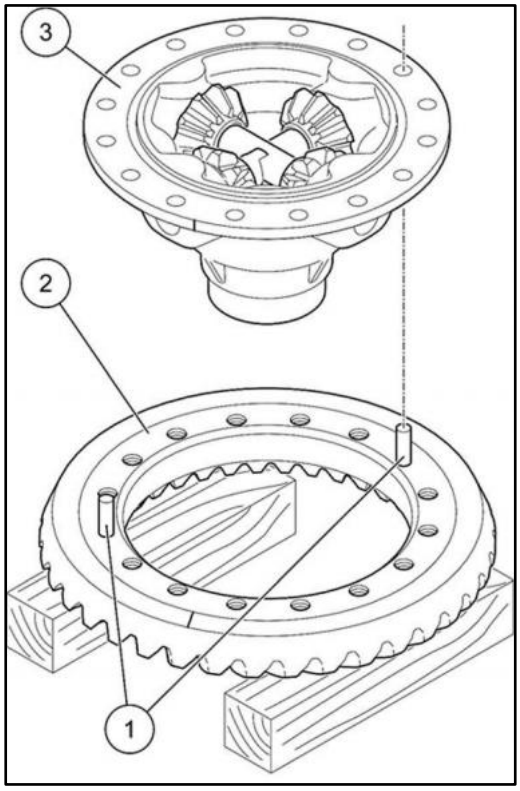

Installation steps

1. Use a hammer to install the passive wheel positioning pin ① into the positioning pin hole.
2. Connect the assembled differential ③ to the passive wheel ②.

Note: Align the passive wheel positioning pin with the differential positioning pin hole.

Install the upper cover half axle gear

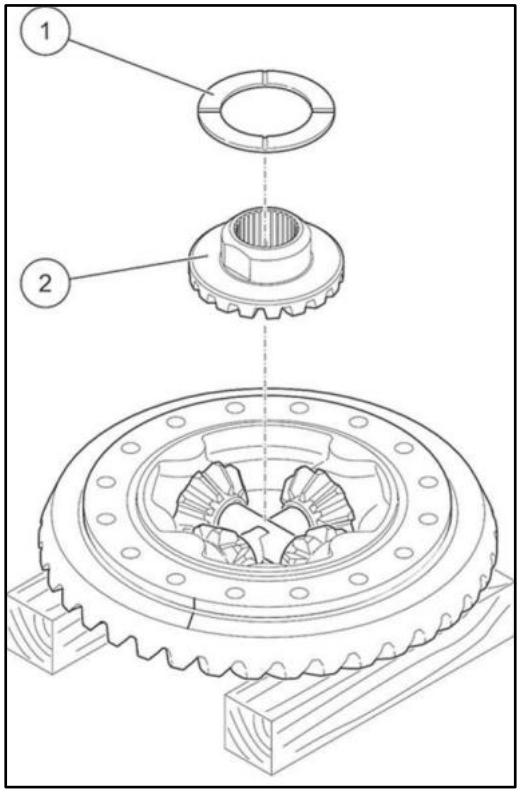

Installation steps

1. Connect the upper cover half axle gear ② to the planetary gear.
2. Connect the half axle gear shim ① to the half axle gear.

Pair and install the drive and passive wheels

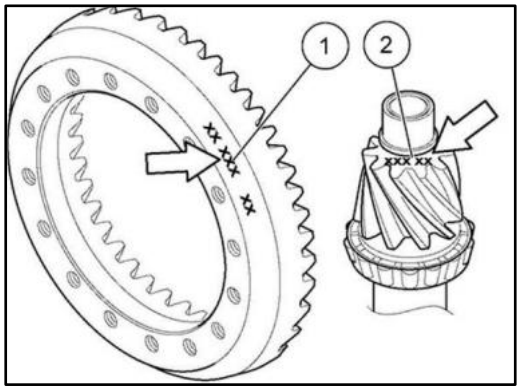

Operational steps

1. Check if the drive wheel ② is paired with the passive wheel ①.

Note: It is required to pair and install the drive and passive wheels.

Install the upper cover

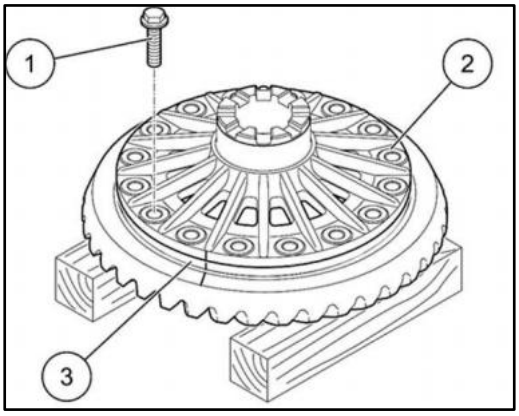

Installation steps

1. Align the marking line ③, and connect the upper cover ② to the differential.
2. Apply threadlocker to the connecting bolt ① (M18*1.5*55); use a 24mm sleeve to symmetrically tighten the connecting bolt ①, with a torque range of 570 ± 40Nm, and an actuating torque of 570Nm.
4. Insert the fixture to test the differential's differential function. Use a torque meter to measure the rotational resistance torque, with a torque range of ≤ 4Nm.

Auxiliary material: Loctite 271 threadlocker

Install the bearing

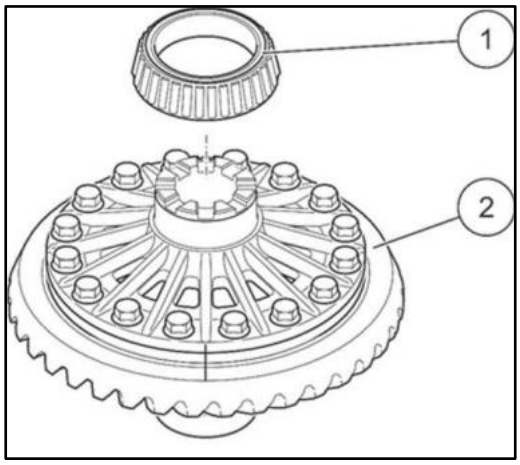

Installation steps

1. Press the upper cover bearing ① onto the shaft shoulder of the upper cover ②.
2. Reverse the differential and passive wheel, and press the bearing on the other side to the bottom.

Note: Use a 0.02mm feeler gauge to insert into the lower side of the bearing and check if it is pressed in place.

Install the adjusting shim

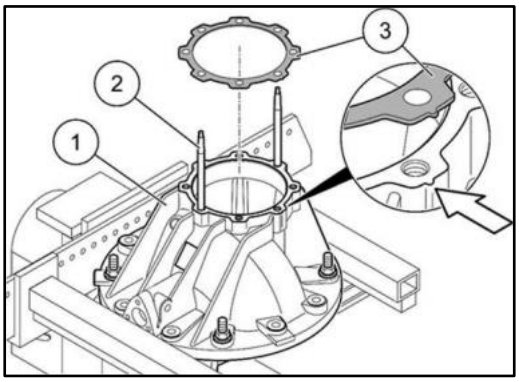

Installation steps

1. Apply flange sealant on the final drive housing; install the guide bolt ② into the final drive housing.
2. Install the adjusting shim ③ onto the final drive housing ①; apply flange sealant to the adjusting shim.

Auxiliary material: Loctite 1596 flange sealant

Install the drive wheel assembly

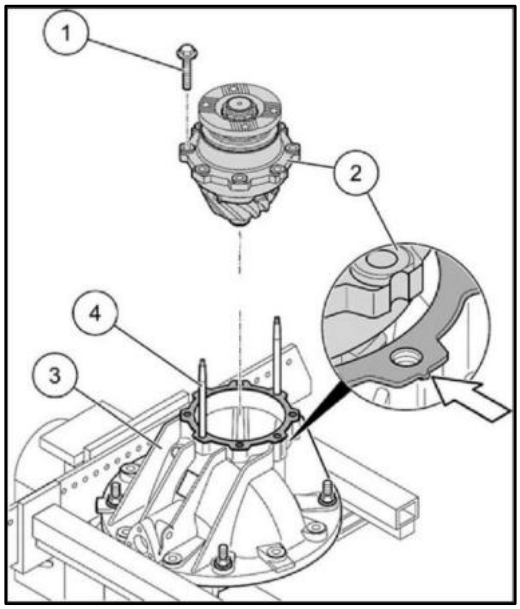

Installation steps

1. Install the drive wheel assembly ② onto the final drive housing ③ through the guide bolt ④; apply threadlocker to the connecting bolt ①.
2. Use a 22mm sleeve to symmetrically tighten the bolt (M16*1.5*45), with a torque range of 380 ± 40Nm, and an actuating torque of 380Nm.
3. Use a torque meter to measure the rotating torque of the driving bevel gear, with a torque range of 15 ± 4Nm. If it does not match, disassemble and replace the adjusting shim.

Auxiliary material: Loctite 243 threadlocker

Note: Use 810W90702-0065 adjusting gasket unit.

Install the passive wheel assembly

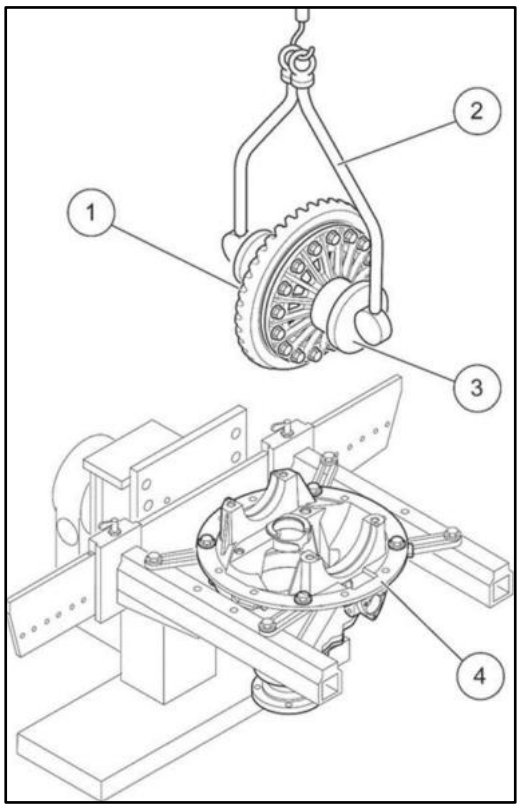

Installation steps

1. Reverse the final drive housing ④, and apply machine oil to the joint between the bearing cap and the outer ring.
2. Place the bearing outer rings on both sides of the passive wheel on the corresponding bearings.
3. Clamp lifting tool ② clamp ③ onto the passive wheel assembly, and lift the passive wheel assembly ① onto the final drive housing.

Auxiliary material: 15# machine oil

Install the bearing cap

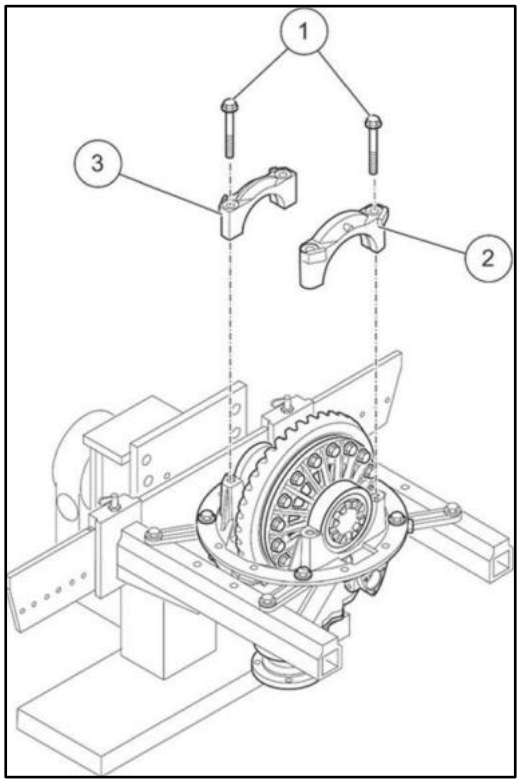

Installation steps

1. Pre-install the marked bearing caps ② and ③ onto the corresponding final drive housing positions.
2. Apply threadlocker to the connecting bolt; use a 30mm sleeve to pre-tighten 4 bolts ① (M20*110) with an actuating torque of 60Nm.
Auxiliary material: Loctite 243 threadlocker

Install the adjusting nut

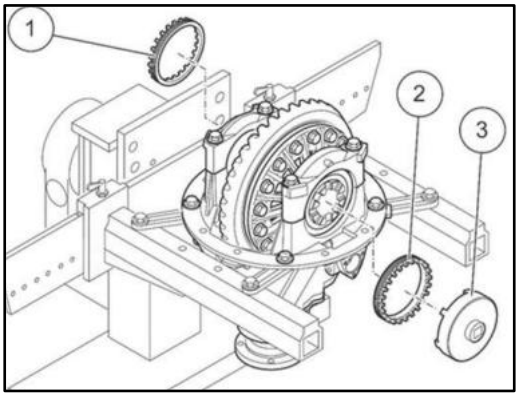

Installation steps

1. Apply lithium grease to the adjusting nuts ① and ②; use a special socket tool ③ to pre-install the adjusting nut onto the thread.
Auxiliary material: 2# general automotive lithium grease

Gear side backlash detection and adjustment method

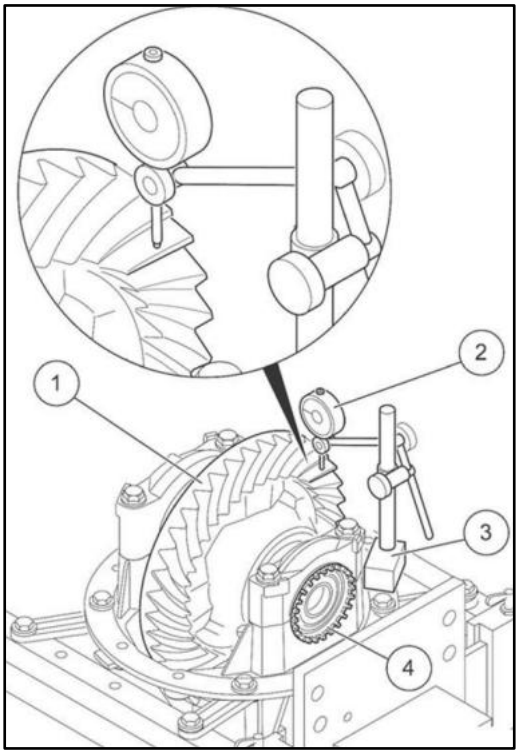

Operational steps

1. Use a special socket tool to pre-tighten the drive wheel-side adjusting nut, with a pre-tightening torque of 10Nm; use a hammer to strike the bearing cap, and rotate the passive wheel by hand (at least 1 turn) to ensure that the bearing is correctly aligned with the outer ring.
2. Attach the magnetic meter holder ③ onto the bearing cap; place the dial gauge ② perpendicular to the middle position of the passive gear teeth, press down the gauge outfit by 1-2mm, and rotate the dial to make the pointer point "0"; shake the passive wheel left and right with both hands (the drive wheel does not move), read the runout value of the dial gauge ②, with an actuating value of 0.25-0.35mm.
3. Loosen passive wheel-side adjusting nut ④, use a special tool to tighten the passive wheel-side adjusting nut ④, with an actuating torque of 120Nm. Then turn the passive wheel ① (at least 1 turn), and tighten the passive wheel-side adjusting nut ④, with a torque of 100 ± 5Nm, and an actuating torque of 100Nm.
4. Attach the magnetic meter holder ③ onto the bearing cap; place the dial gauge ② perpendicular to the middle position of the passive gear teeth, press down the gauge outfit by 1-2mm, and rotate the dial to make the pointer point "0"; shake the passive wheel left and right with both hands (the drive wheel does not move), read the runout value of the dial gauge ②, with an actuating value of 0.2±0.1mm.

Note: If the dial gauge reading is out of tolerance, please adjust the gear side backlash by screwing in or out the adjusting nut.

Inspect the contact pattern

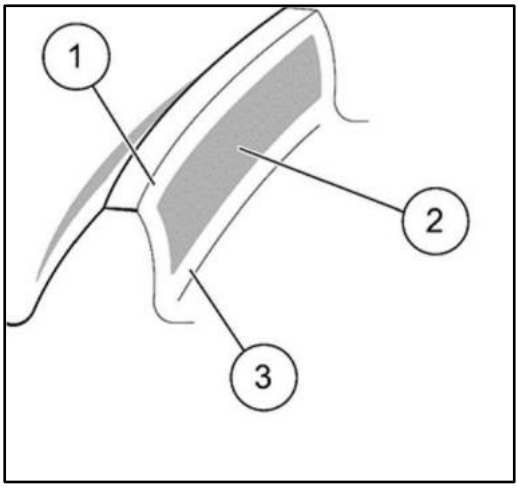

Operational steps

1. Apply acrylic pigment to 2-3 teeth of the passive wheel.

2. Rotate the passive wheel to mesh the teeth with acrylic pigment with the drive wheel teeth; observe whether the contact pattern meets the requirements (the distance between the contact pattern and the tooth bottom ③ is 2-7mm; the length of the contact pattern ② accounts for 1/2-2/3 of the tooth length; the distance between the contact pattern and the tooth top ① is not less than 50%; there should be no interference at any boundary).

Auxiliary material: 1401010625 acrylic pigment

Lock the adjusting nut

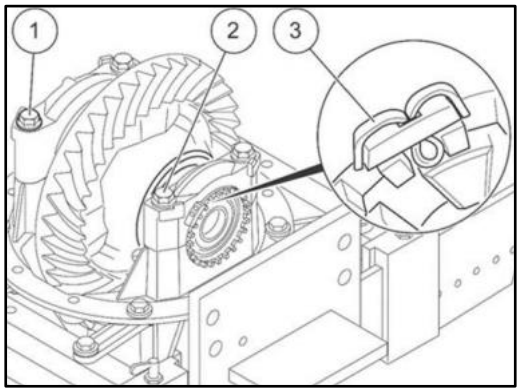

Installation steps

1. After contact pattern adjustment is qualified, use a 30mm sleeve to tighten the four bearing cap connecting bolts ① and ② (M20*110), with a torque range of 530 ± 50Nm, and an actuating torque of 530Nm.
2. Use a split pin ③ to lock the passive wheel adjusting nut.

Install the shift fork and meshing sleeve

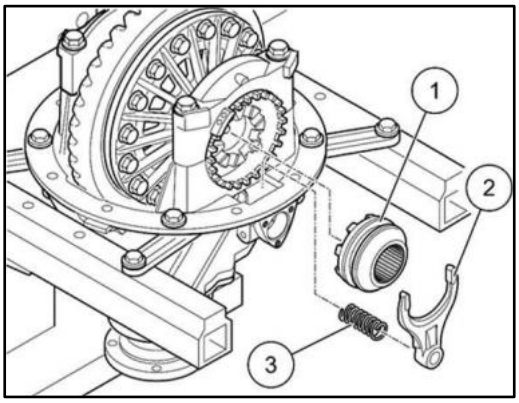

Installation steps

1. Thread the fork shaft through the shift fork into the fork shaft bottom hole, use a feeler gauge to measure the fork end face and fork shaft end face clearance C1, with an adjusting shim thickness of C1-0.5mm, and pull out the fork shaft.
2. Place the cylinder spring ③ into the fork shaft hole.
3. Use a special tool to press the spring ③; insert the shift fork ②, and when the fork reaches the special tool, remove the special tool and install the fork to the bottom.
4. Connect the meshing sleeve ① to the shift fork.

Note: Pay attention to the forward and backward direction of the shift fork, with the side with words facing outward.

Install the fork shaft

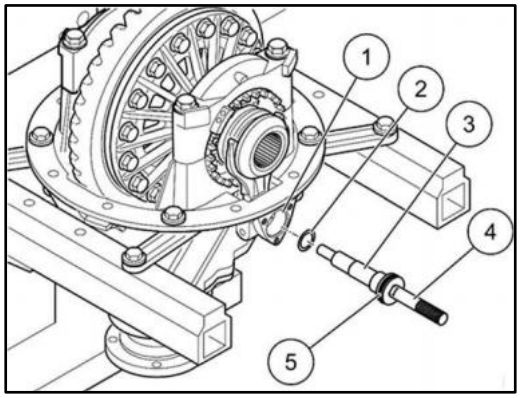

Installation steps

1. Install the cylinder bushing ① into the fork hole using a cylinder bushing installation tool.
2. Apply white installation plaster to fork shaft ③, O-ring ⑤ and bushing ① inner diameter fitting site.
3. Place the gasket ② onto the fork shaft, use a installation tool to thread the fork shaft through the shift fork and spring in sequence, and locate it in the final drive housing hole. To ensure that the fork shaft slides freely, install the sliding meshing sleeve on the shift fork.

Auxiliary material: OPTIMOL installation plaster

Note: Adjusting washer thickness calculation method C1-0.5mm.

Install the cylinder

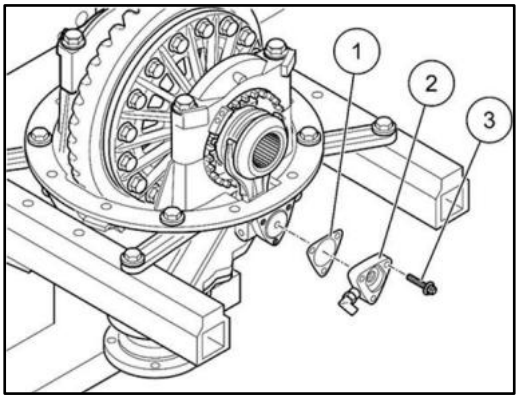

Installation steps

1. Use a T-45 sleeve to thread the hexagon bolt with flange ③ (M8*35) through cylinder ② in sequence, and tighten the sealing gasket ① to the final drive housing, with a torque range of 25 ± 2Nm, and an actuating torque of 25Nm.

Note: The protruding side of the sealing gasket should face cylinder ②.

Inspect the meshing sleeve clearance

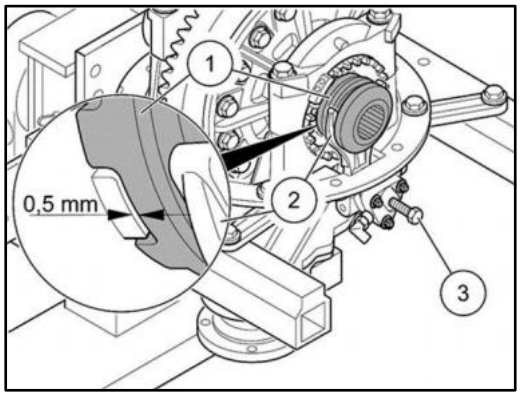

Operational steps

1. Use a 27mm sleeve to tighten the process bolt ③ (M18*1.5), push the shift fork ② to mesh with the meshing sleeve, with an actuating torque of 35Nm.
2. Use a feeler gauge to inspect the clearance between the meshing sleeves, with an actuating clearance of 0.5mm.

Install the final drive assembly

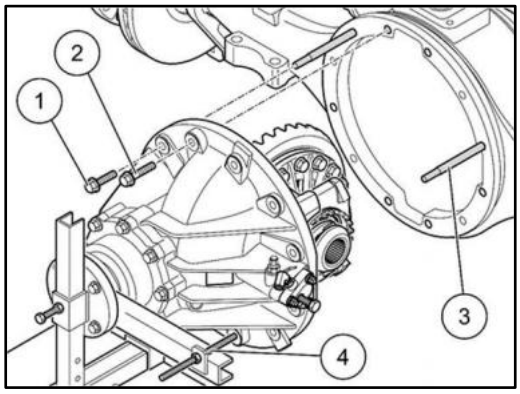

Installation steps

1. Apply an appropriate amount of flange sealant on the joint between the final drive and the axle housing; use an 18mm sleeve to connect the final drive input flange to the disassembly bracket ④ using bolt (M14*1.5).
2. Connect the final drive assembly to the axle housing through the guide bolt ③; apply an appropriate amount of threadlocker on the connecting long bolt ② and short bolt ①.
3. Use a 22mm sleeve to symmetrically tighten the connecting bolt, with a torque range of 370 ± 40Nm, and an actuating torque of 370Nm.
4. Install the half axle and other components according to the MCY13 wheel end installation steps.

Auxiliary material: Loctite 1596 flange sealant, Loctite 271 threadlocker

Note: Distinguish the mounting position of final drive connecting bolt; use long bolt (M16*1.5*50) for the final drive with high convex plate, and short bolt (M16*1.5*40) for the rest.

Drum-type wheel end

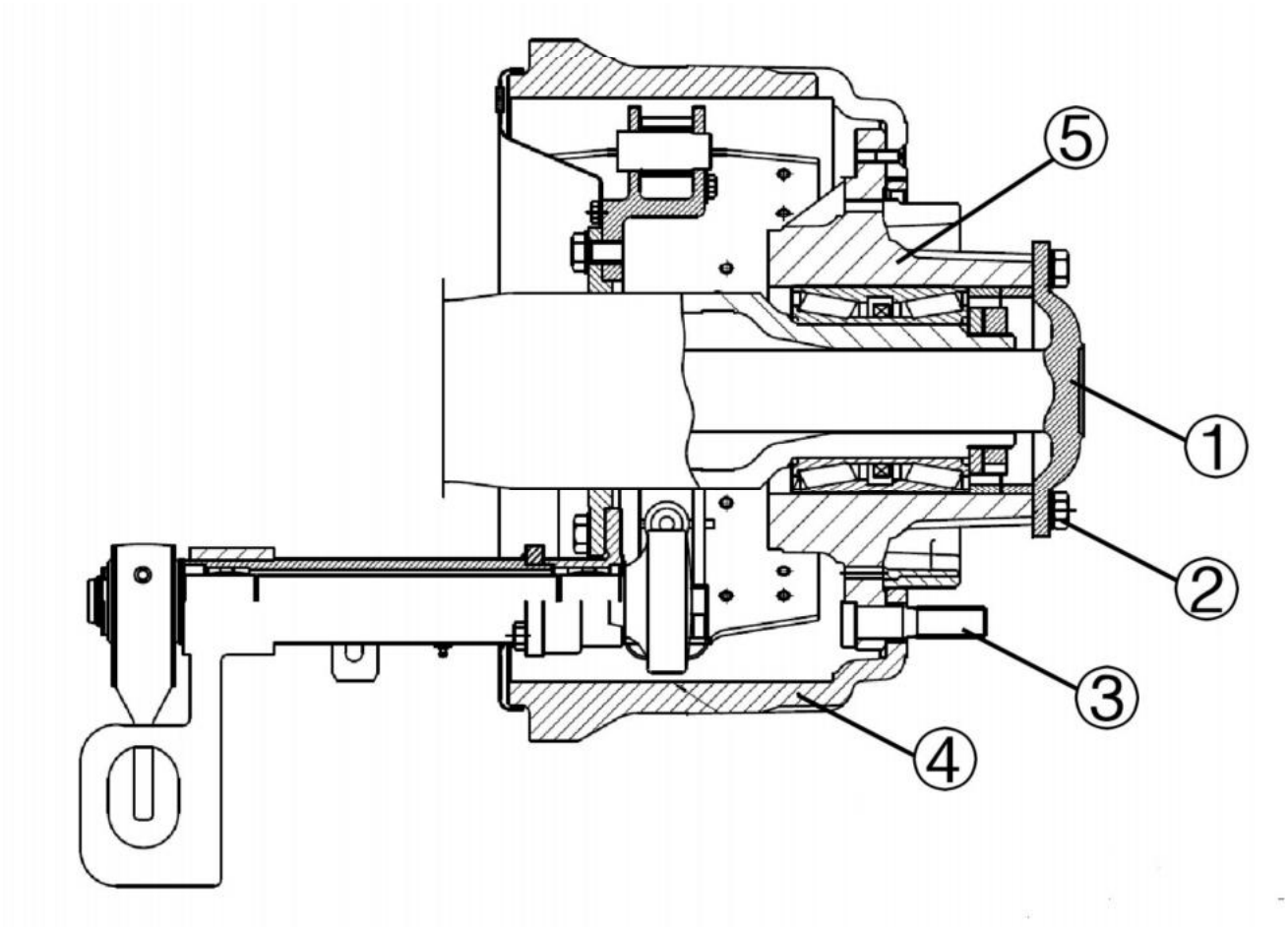

1. Half axle 2. Half axle connecting bolt 3 Wheel bolt 4. Brake drum 5. Wheel hub

Remove the brake drum screw

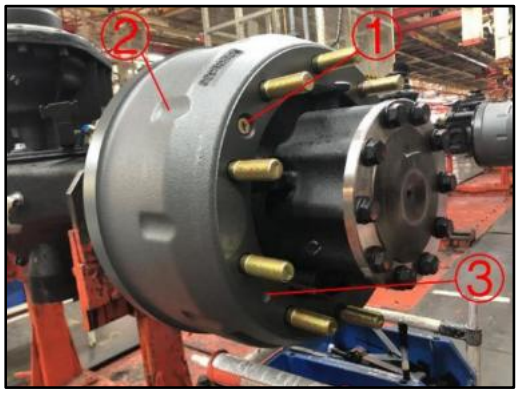

Removal steps

1. Remove the wheel nut, tire and other components.
2. Use a cross screwdriver to remove the brake drum screw ①; use a 16mm sleeve to install M10 bolt into brake drum dismantling hole ③, open the brake drum ②.

Remove the brake drum



Removal steps

1. Use a lifting tool to hook the brake drum wheel bolt hole ①, and lift the brake drum ② off the brake ③.

Remove the pressure switch

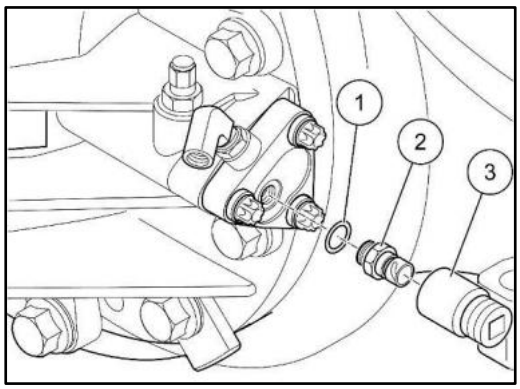

Removal steps

1. Use a 27mm sleeve ③ to remove the pressure switch ②.
2. Remove the sealing washer ①.

Mesh the differential lock

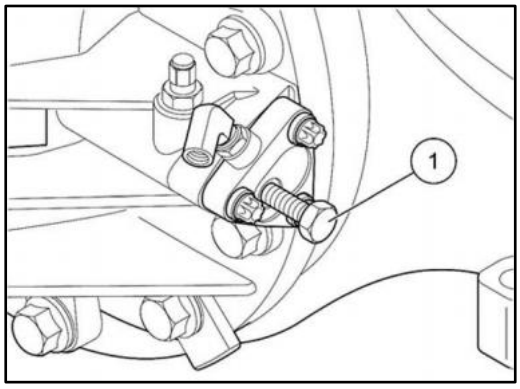

Operational steps

1. Use a 27mm sleeve to install the (M18*1.5) process bolt ① into the pressure switch thread, and rotate the wheel hub left and right until the differential lock engages. The tightening torque of the process bolt ① is 35Nm.

Remove the half axle



Removal steps

1. Use a 22mm sleeve to remove the half axle connecting bolt ① (M16*1.5*40) counterclockwise.
2. Extract the half axle ② from the axle housing chamber.

Remove the axle head locking nut



Removal steps

1. Restore the "concavity" on the axle head locking nut ② using a chisel, then remove the axle head locking nut using a special socket tool (Q6802-10200).
2. Remove the thrust washer ①.

Remove the wheel hub



Removal steps

1. Install the guide sleeve ② into the thread of axle head locking nut, and pull out the wheel hub ① from the axle head with both hands.
2. Remove the wheel hub O-ring and wheel hub spacer ring.

Note: The O-ring is disposable, and should be replaced with a new one.

Remove ABS bracket



Removal steps

1. Use an iron rod to pry the ABS bracket ① off the shaft shoulder ②.

Remove brake bottom plate fitting



Removal steps

1. Use a 21mm sleeve to remove the brake bottom plate connecting bolt ① (M14*1.5).
2. Lift down the brake bottom plate fitting ②.

Install brake bottom plate fitting



Installation steps

1. Lift the brake bottom plate fitting ② onto the axle housing axle head fixing disk.
2. Apply an appropriate amount of threadlocker to the hexagon bolt with flange.
3. Use a 21mm sleeve to thread bolt ① (M14*1.5) through the brake bottom plate, and screw it into the fixing disk thread, and tighten the brake bottom plate bolt, with a torque range of 162 ± 16Nm and an actuating torque of 162Nm.

Auxiliary material: Loctite 271 threadlocker

Note: The brake lining on the same side should be from the same manufacturer.

Install ABS bracket



Installation steps

1. Apply 1/3 circle of holding adhesive at the matching position ② between the ABS bracket and the shaft shoulder.

2. Use a tooling to impact bracket ① onto the shaft shoulder; measure the distance between the ABS bracket and the shaft shoulder using a dial gauge, with a distance range of 0.2-0.35mm.

Auxiliary material: Loctite 680 holding adhesive

Note: Use a dial gauge to measure the distance between the ABS bracket and the shaft shoulder, which should be 31 (+1/0) mm; when adding ABS wire, please distinguish it. The left wheel joint of the disc-type axle is gray white, while the right wheel joint is black; the drum type is the same on both sides.

Remove the guide sleeve



Installation steps

1. Install the guide sleeve ① into the thread of axle head locking nut.
2. Uniformly apply the high-efficiency grease to the contact surface ② between the axle head and the wheel hub bearing using a soft foam block.

Auxiliary materials: SKF LGAF 3E high-efficiency grease, soft foam block.

Note: No high-efficiency grease is applied to the location ③ where the middle of bearing contact surface is 2cm away from the shaft shoulder.

Install the wheel hub O-ring



Installation steps

1. Install the wheel hub O-ring ① into bearing unit wheel hub inner seal groove ②.

Install the wheel hub



Installation steps

1. Lift the wheel hub ① and push it into the axle head through the guide sleeve ②.
2. Remove the guide sleeve; wipe off the oil fouling.

Note: Do not damage the ABS gear ring during the process, and do not lose the O-ring.

Tighten the axle head locking nut



Operational steps

1. Install the thrust washer ② and the axle head locking nut ① on the axle head in sequence.
2. Use a special socket tool (Q6802-10200) to tighten the axle head locking nut, with a torque range of 1200 ± 100Nm and an actuating torque of 1200Nm (the same for the left and right wheels).
3. Knock the concavity of axle head locking nut ① at axle head notch, and ensure that there are no cracks at the locking point.

Note: ABS performance test: Rotate the wheel hub by hand for about 30 RPM, observe the displayed instantaneous induced voltage value, with a range standard of ≥ 0.2V. If the measurement results do not meet the standards, adjust the distance between the ABS probe and the gear ring; or replace the ABS wire or gear ring.

Spacer ring location diagram

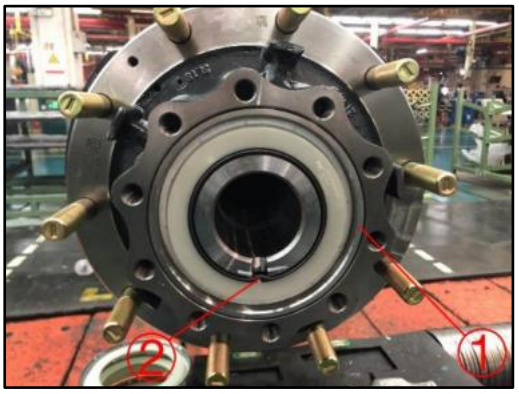

Note: Before installing the half axle, confirm whether the axle head locking nut ② is locked, and whether the wheel hub spacer ring ① is installed in the matching position between the bearing unit and the half axle; if the wheel hub assembly needs to be replaced, pay attention to the matching between the spacer ring and the wheel hub. It is required that the distance between the bearing unit and the wheel hub end face after adding the spacer ring is ≤ 0.1mm.

Install the half axle

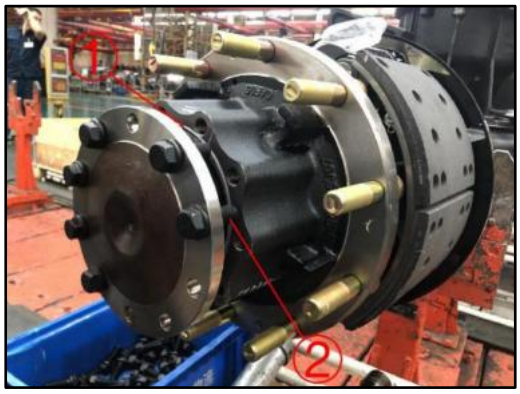

Installation steps

1. Apply threadlocker to the thread of the half axle bolt ②; apply flange sealant to the contact surface ① between the half axle and the wheel hub.
2. Install the half axle into the axle housing chamber; rotate the half axle left and right to mesh with the final drive half axle gear.

Auxiliary material: Loctite 271 threadlocker, Loctite 1596 flange sealant

Tighten the half axle bolt



Installation steps

1. Manually screw in the half axle bolt ① (M16*1.5*40) by 2-3 threads; use a 22mm sleeve to tighten it symmetrically, with a torque range of 360 ± 40Nm and an actuating torque of 360Nm.

Install the pressure switch

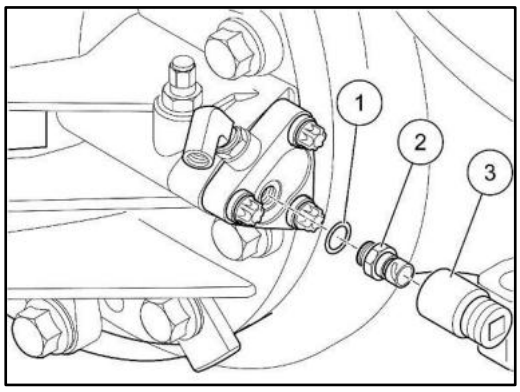

Installation steps

1. Use a 27mm sleeve to remove the (M18*1.5) bolt; install the sealing gasket ① pressure switch ② into the differential locking cylinder using a 27mm sleeve ③, and tighten it in sequence, with a torque range of 40 ± 5Nm and an actuating torque of 40Nm.

2. Connect the air circuit to test whether the differential lock can be disengaged freely; check if the On-Off signal of the pressure switch is normal.

Note: The smooth surface of the pressure switch sealing washer faces the pressure switch.

Install the brake drum



Installation steps

1. Lift the brake drum ①, place the brake ②, align the wheel bolt with the brake drum bolt hole ③, and align the brake drum screw hole ④.

Install the brake drum screw

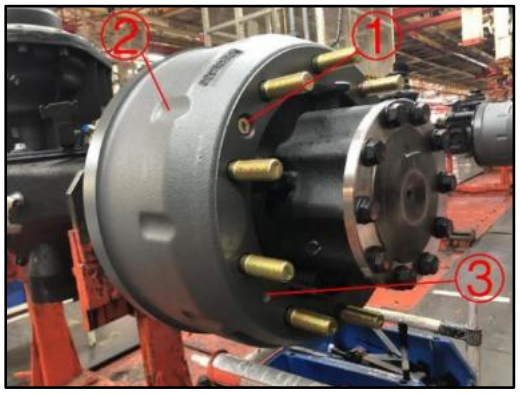

Installation steps

1. After pushing the brake drum ② to the bottom, use a cross screwdriver to tighten screw ①. With a torque range of 22±2Nm and an actuating torque of 22Nm.
2. Rotate the brake drum and check for any interference with the dust cover or abnormal noise; block the dismantling hole ③ using flange sealant to prevent rust and corrosion.

Auxiliary material: Flange sealant

Note: Please ensure that the brake drum and adjusting arm on both sides of the same axle are from the same manufacturer.

Inspect brake clearance difference

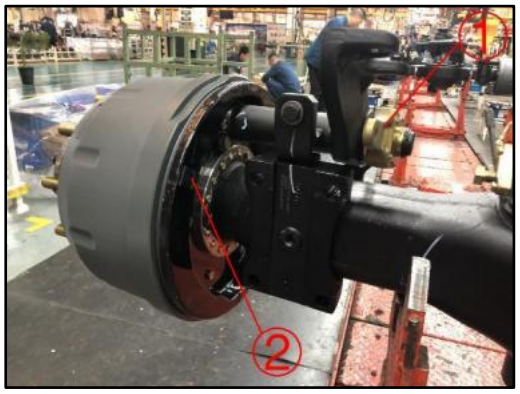

Operational steps

1. Pull the brake adjusting arm ①, then there is a noticeable braking stroke; it can quickly return to its original position after being released.
2. Use a feeler gauge to 100% measure the brake clearance difference between the brake shoe and brake drum through the rubber plug hole ②, with a clearance range of<0.3mm.
3. Testing method: Select a 0.3mm feeler leaf, remove the rubber plug, and insert the feeler leaf into the hole. Pull the brake clearance adjusting arm to make the brake lining fit the brake drum; at this point, try to remove the feeler leaf. If it can be easily removed, it indicates that the brake clearance difference is not qualified; Measure the brake clearance on the other side of the brake drum using the same method. If the feeler leaf cannot be removed twice, it is considered qualified.

Drum-type brake

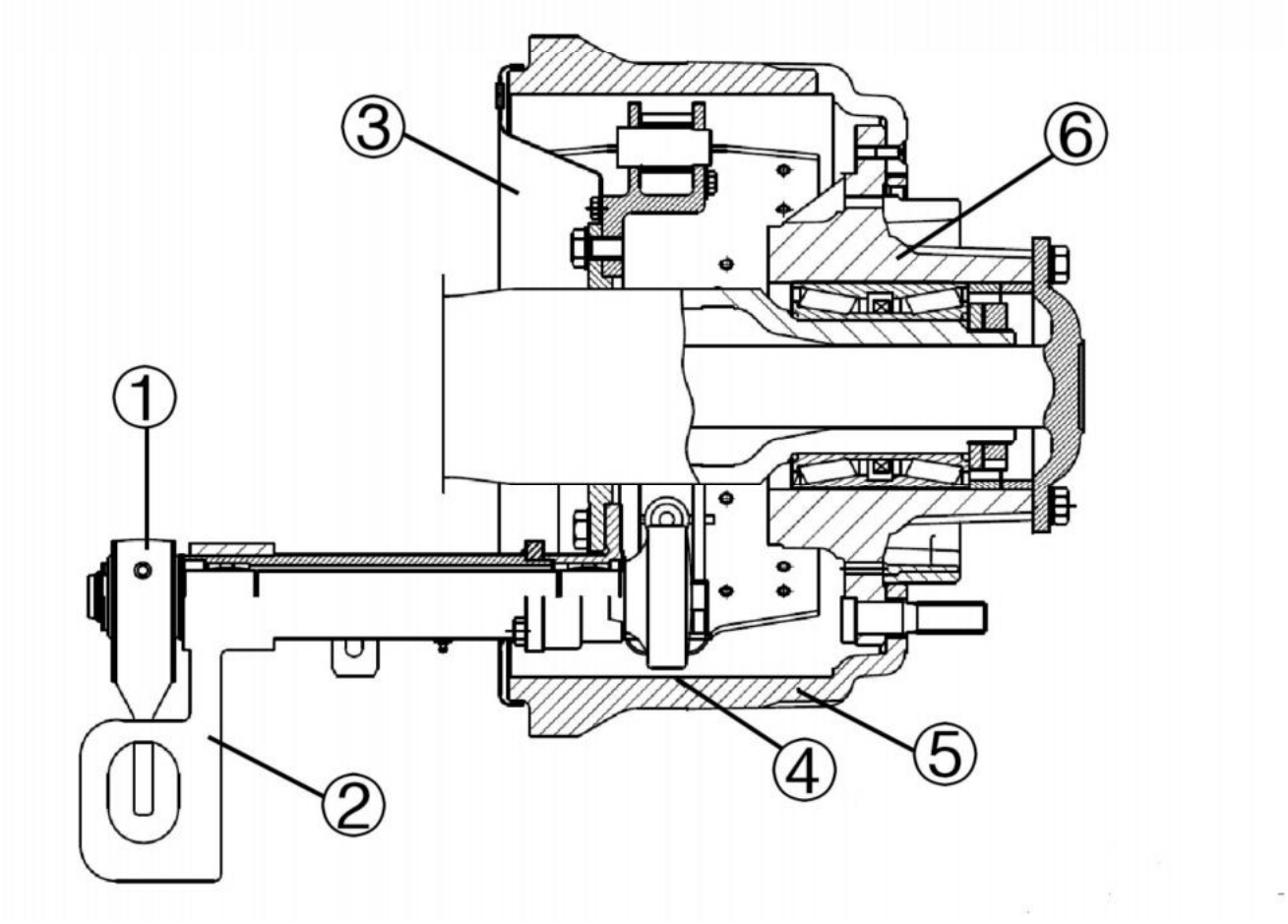

1. Brake adjusting arm 2. Air chamber bracket 3. Dust cover 4. Brake clearance difference measurement position 5. Brake drum 6. Wheel hub

Remove the brake drum screw

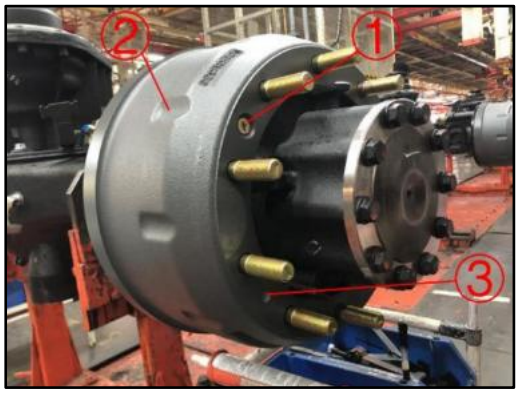

Removal steps

1. Remove the wheel nut, tire and other components.
2. Use a cross screwdriver to remove the brake drum screw ①; use a 16mm sleeve to install M10 bolt into brake drum dismantling hole ③, open the brake drum ②.

Remove the brake drum



Removal steps

1. Use a lifting tool to hook the brake drum wheel bolt hole ①, and lift the brake drum ② off the brake ③.

Remove the pressure switch

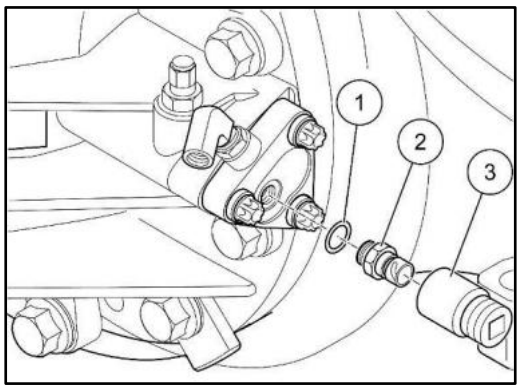

Removal steps

1. Use a 27mm sleeve ③ to remove the pressure switch ②.
2. Remove the sealing washer ①.

Mesh the differential lock

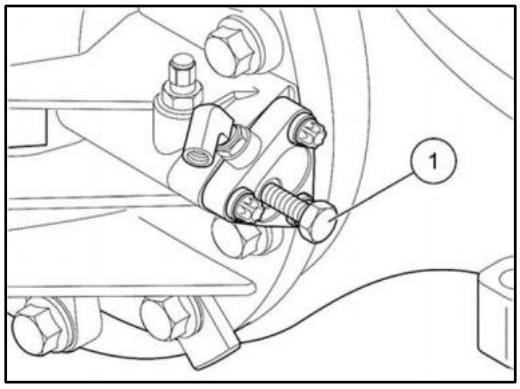

Removal steps

1. Use a 27mm sleeve to install the process bolt ① (M18*1.5) into the pressure switch thread, and rotate the wheel hub left and right until the differential lock engages. The actuating torque of the process bolt is 35Nm.

Remove the half axle



Removal steps

1. Use a 22mm sleeve to remove the half axle connecting bolt ① (M16*1.5*40) counterclockwise.
2. Extract the half axle ② from the axle housing chamber.

Remove the axle head locking nut



Removal steps

1. Restore the "concavity" on the axle head locking nut ② using a chisel, then remove the axle head locking nut using a special socket tool (Q6802-10200).
2. Remove the thrust washer ①.

Remove the wheel hub



Removal steps

1. Install the guide sleeve ② into the thread of axle head locking nut, and pull out the wheel hub ① from the axle head with both hands.
2. Remove the wheel hub O-ring and wheel hub spacer ring.

Note: The O-ring is disposable, and should be replaced with a new one.

Remove ABS bracket



Removal steps

1. Use an iron rod to pry the ABS bracket ① off the shaft shoulder ②.

Remove brake bottom plate fitting



Removal steps

1. Use a 21mm sleeve to remove the brake bottom plate connecting bolt ① (M14*1.5).
2. Lift down the brake bottom plate fitting ②.

Install brake bottom plate fitting



Installation steps

1. Lift the brake bottom plate fitting ② onto the axle housing axle head fixing disk.
2. Apply an appropriate amount of threadlocker to the hexagon bolt with flange.
3. Use a 21mm sleeve to thread bolt ① (M14*1.5) through the brake bottom plate, and screw it into the fixing disk thread, and tighten the brake bottom plate bolt, with a torque range of 162 ± 16Nm and an actuating torque of 162Nm.

Auxiliary material: Loctite 271 threadlocker

Note: The brake lining on the same side should be paired for use.

Install ABS bracket



Installation steps

1. Apply 1/3 circle of holding adhesive at the matching position ② between the ABS bracket and the shaft shoulder.
2. Use a tooling to impact bracket ① onto the shaft shoulder; measure the distance between the ABS bracket and the shaft shoulder using a dial gauge, with a distance range of 0.2-0.35mm.

Auxiliary material: Loctite 680 holding adhesive

Note: Use a dial gauge to measure the distance between the ABS bracket and the shaft shoulder, which should be 31 (+1/0) mm; when adding ABS wire, please distinguish it. The left wheel joint of the disc-type axle is gray white, while the right wheel joint is black; the drum type is the same on both sides.

Remove the guide sleeve



Installation steps

1. Install the guide sleeve ① into the thread of axle head locking nut.
2. Uniformly apply the high-efficiency grease to the contact surface ② between the axle head and the wheel hub bearing using a soft foam block.

Auxiliary materials: SKF LGAF 3E high-efficiency grease, soft foam block.

Note: No high-efficiency grease is applied to the location ③ where the middle of bearing contact surface is 2cm away from the shaft shoulder.

Install the wheel hub O-ring



Installation steps

1. Install the wheel hub O-ring ① into bearing unit wheel hub inner seal groove ②.

Install the wheel hub



Installation steps

1. Lift the wheel hub ① and push it into the axle head through the guide sleeve ②.
2. Remove the guide sleeve, and wipe off the oil fouling.

Note: Do not damage the ABS gear ring during the installation process, and do not lose the O-ring.

Tighten the axle head locking nut



Installation steps

1. Install the thrust washer ② and the axle head locking nut ① on the axle head in sequence.
2. Use a special socket tool (Q6802-10200) to tighten the axle head locking nut, with a torque range of 1200 ± 100Nm and an actuating torque of 1200Nm (the same for the left and right wheels).
3. Lock the concavity of axle head locking nut ① at axle head notch, and ensure that there are no cracks at the locking point.

Note: ABS performance test: Rotate the wheel hub by hand for about 30 RPM, observe the displayed instantaneous induced voltage value, with a range standard of ≥ 0.2V . If the measurement results do not meet the standards, adjust the distance between the ABS probe and the gear ring; or replace the ABS wire or gear ring.

Spacer ring location diagram

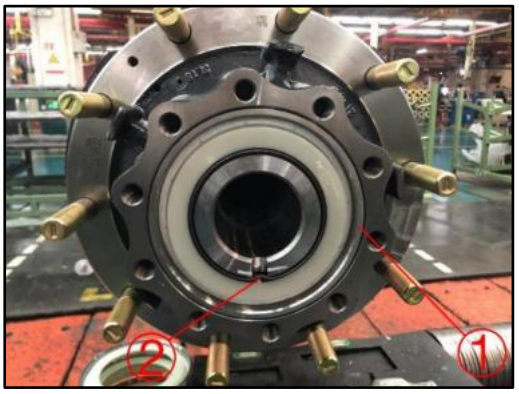

Note: Before installing the half axle, confirm whether the axle head locking nut ② is locked, and whether the wheel hub spacer ring ① is installed in the matching position between the bearing unit and the half axle; if the wheel hub assembly needs to be replaced, pay attention to the matching between the spacer ring and the wheel hub. It is required that the distance between the bearing unit and the wheel hub end face after adding the spacer ring is ≤ 0.1mm.

Install the half axle

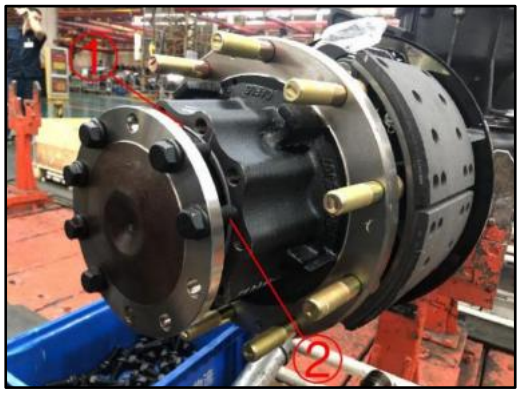

Installation steps

1. Apply threadlocker to the thread of the half axle bolt ②; apply flange sealant to the contact surface ① between the half axle and the wheel hub.
2. Install the half axle into the axle housing chamber; rotate the half axle left and right to mesh with the final drive half axle gear.

Auxiliary material: Loctite 271 threadlocker, Loctite 1596 flange sealant

Tighten the half axle bolt



Installation steps

1. Manually screw in the half axle bolt ① (M16*1.5*40) by 2-3 threads; use a 22mm sleeve to tighten it symmetrically, with a torque range of 360 ± 40Nm and an actuating torque of 360Nm.

Install the pressure switch

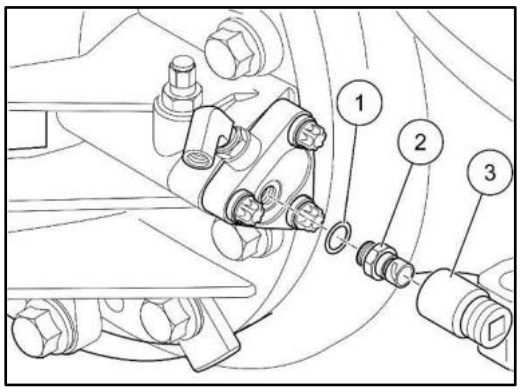

Installation steps

1. Use a 27mm sleeve to remove the (M18*1.5) bolt; install the sealing gasket ① pressure switch ② into the differential locking cylinder using a 27mm sleeve ③, and tighten it in sequence, with a torque range of 40 ± 5Nm and an actuating torque of 40Nm.

2. Connect the air circuit to test whether the differential lock can be disengaged freely; check if the On-Off signal of the pressure switch is normal.

Note: The smooth surface of the pressure switch sealing washer faces the pressure switch.

Install the brake drum



Installation steps

1. Lift the brake drum, place the brake ②, align the wheel bolt with the brake drum bolt hole ③, and align the brake drum screw hole ④.

Install the brake drum screw

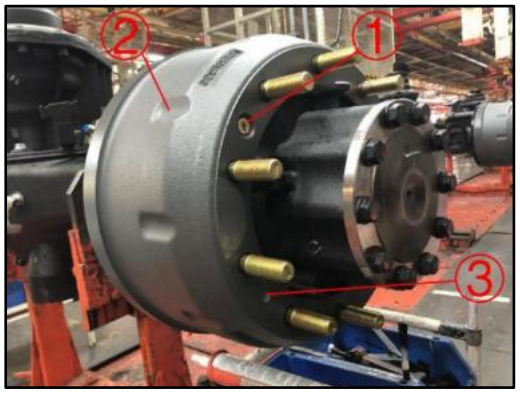

Installation steps

1. After pushing the brake drum ② to the bottom, use a cross screwdriver to tighten screw ①. With a torque range of 22±2Nm and an actuating torque of 22Nm .

2. Rotate the brake drum and check for any interference with the dust cover or abnormal noise; block the dismantling hole ③ using flange sealant to prevent rust and corrosion.

Auxiliary material: Loctite 1596 flange sealant

Note: The brake drums and adjusting arms on both sides of the same axle should be paired for use.

Inspect brake clearance difference

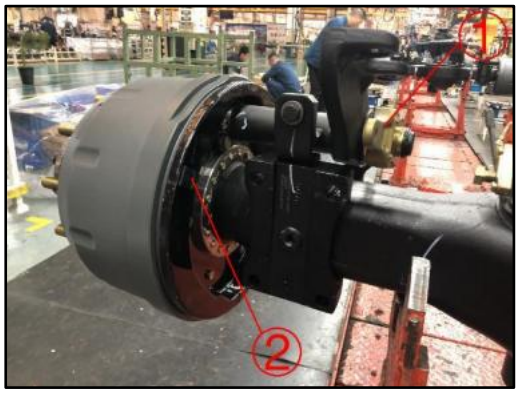

Operational steps

1. Pull the brake adjusting arm ①, then there is a noticeable braking stroke; it can quickly return to its original position after being released.
2. Use a feeler gauge to 100% measure the brake clearance difference between the brake shoe and brake drum through the rubber plug hole ②, with a clearance range of<0.3mm.
3. Testing method: Select a 0.3mm feeler leaf, remove the rubber plug, and insert the feeler leaf into the hole. Pull the brake clearance adjusting arm to make the brake lining fit the brake drum; at this point, try to remove the feeler leaf. If it can be easily removed, it indicates that the brake clearance difference is not qualified; Measure the brake clearance on the other side of the brake drum using the same method. If the feeler leaf cannot be removed twice, it is considered qualified.

Remove the brake dust cover

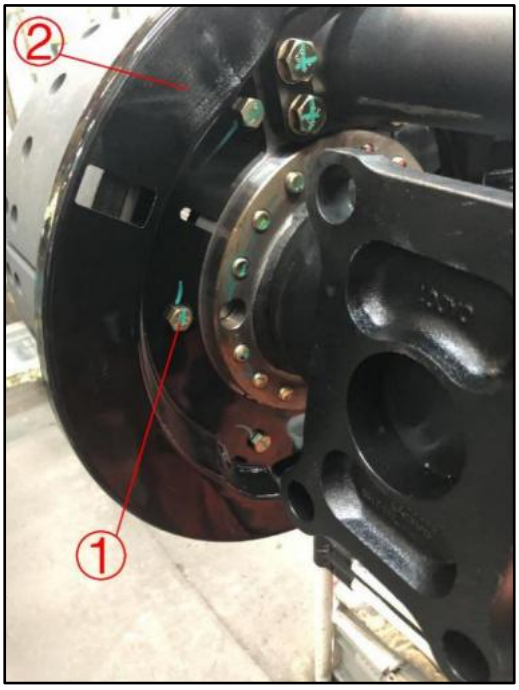

Removal steps

1. Use a 16mm sleeve to remove the dust cover connecting bolt ①; remove the dust covers on both sides ②.
2. Remove the brake drum according to standard operation instructions.

Remove the return spring

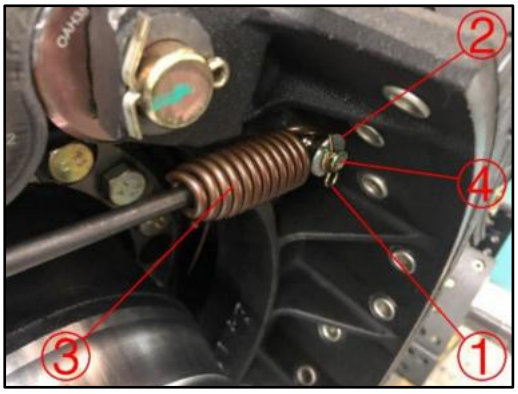

Removal steps

1. Use steel wire pliers to remove the locking pin ①, and remove the flat washer ②.
2. Use an expanding tool to remove the circlip ③ from the axis pin ④.

Remove the brake shoe

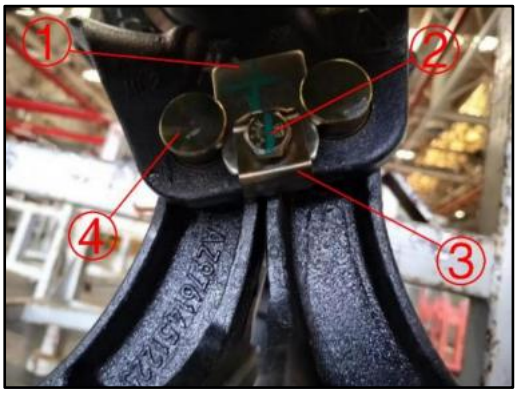

Removal steps

1. Reset the deformed part of lock plate ③; use a 16mm sleeve to remove the lock block bolt ② and remove the lock block ①.
2. Use a hammer and a iron rod to remove the brake shoe support pin ④; remove the brake shoe.

Install brake shoe



Installation steps

1. Install the O-ring ① into the brake shoe support pin hole; apply anti seize lubricant on the contact surface ② between the support pin and the support pin hole.
2. Thread the support pin (the end ③ with locking groove) into the brake bottom plate and brake shoe from one side of the dust cover, and then expose the locking groove (same method on both sides).
3. Connect the lock block to support pin locking groove, align it with the lock plate bolt hole; apply threadlocker to the lock block bolt, use a 16mm sleeve to thread the lock block bolt through the lock plate in sequence, and screw the lock block into the brake bottom plate thread, with a torque range of 55 ± 6Nm, and an actuating torque of 55Nm.

Auxiliary material: Loctite C5-A anti seize lubricant, Loctite 243 threadlocker

Install the return spring

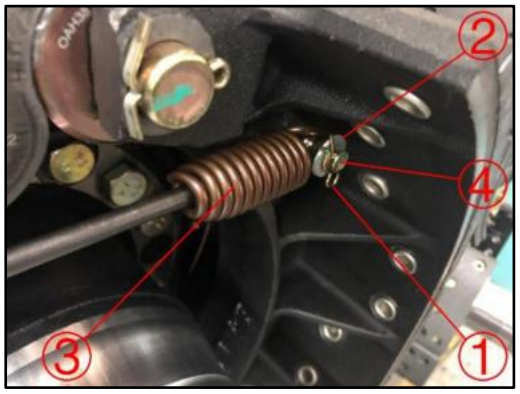

Installation steps

1. Use an expanding tool to install the return spring ③ into axis pin ④ positioning groove, place the flat washer ② on the axis pin, and install the locking pin ①.

Note: The opening of the return spring is facing the support pin; inspect whether the components are assembled properly.

Install the brake dust cover

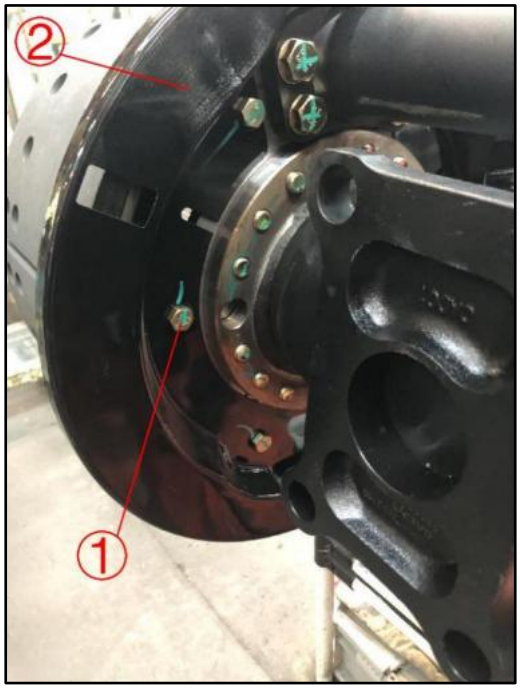

Installation steps

1. Use a 16mm sleeve to thread the dust cover connecting bolt ① through the dust cover, and screw it into the brake bottom plate thread, and tighten the dust cover connecting bolt, with a torque range of 46 ± 5Nm and an actuating torque of 46Nm.

Note: Install brake drum according to standard operation instructions; use a feeler gauge to check the brake clearance difference, with an actuating clearance of 0.3mm.

Remove the adjusting arm

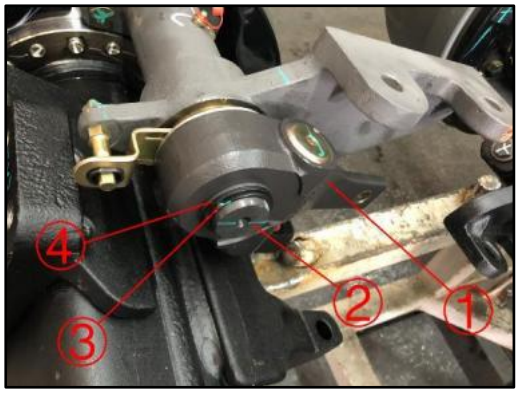

Removal steps

1. Use circlip pliers to remove the circlip ③ from the camshaft ② fixing groove ; remove the adjusting arm ① and adjusting washer ④.

Install the adjusting arm

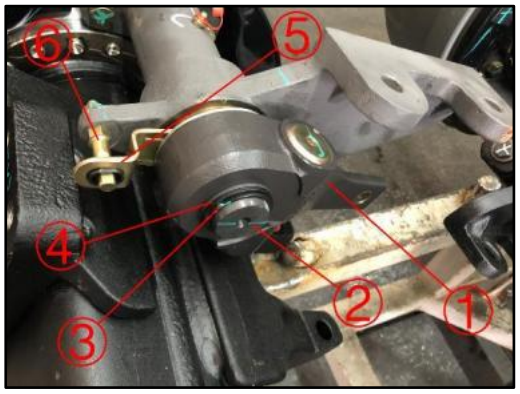

Installation steps

1. Align the adjusting arm ① with the camshaft ②, while connecting the control arm ⑤ of the self-adjusting arm to the axis pin⑥ (manual adjusting arm does not have this function).
2. Select an adjusting shim ④ with appropriate thickness, and place it on the camshaft. Use a circlip pliers to install the circlip ③ into the camshaft fixing groove.
3. Use a feeler gauge to measure the clearance of the self-adjusting arm, with an actuating clearance of 0.5-1.5mm.

Note: Install and use the adjusting arm according to the brake direction arrow on the housing.

Disc wheel end

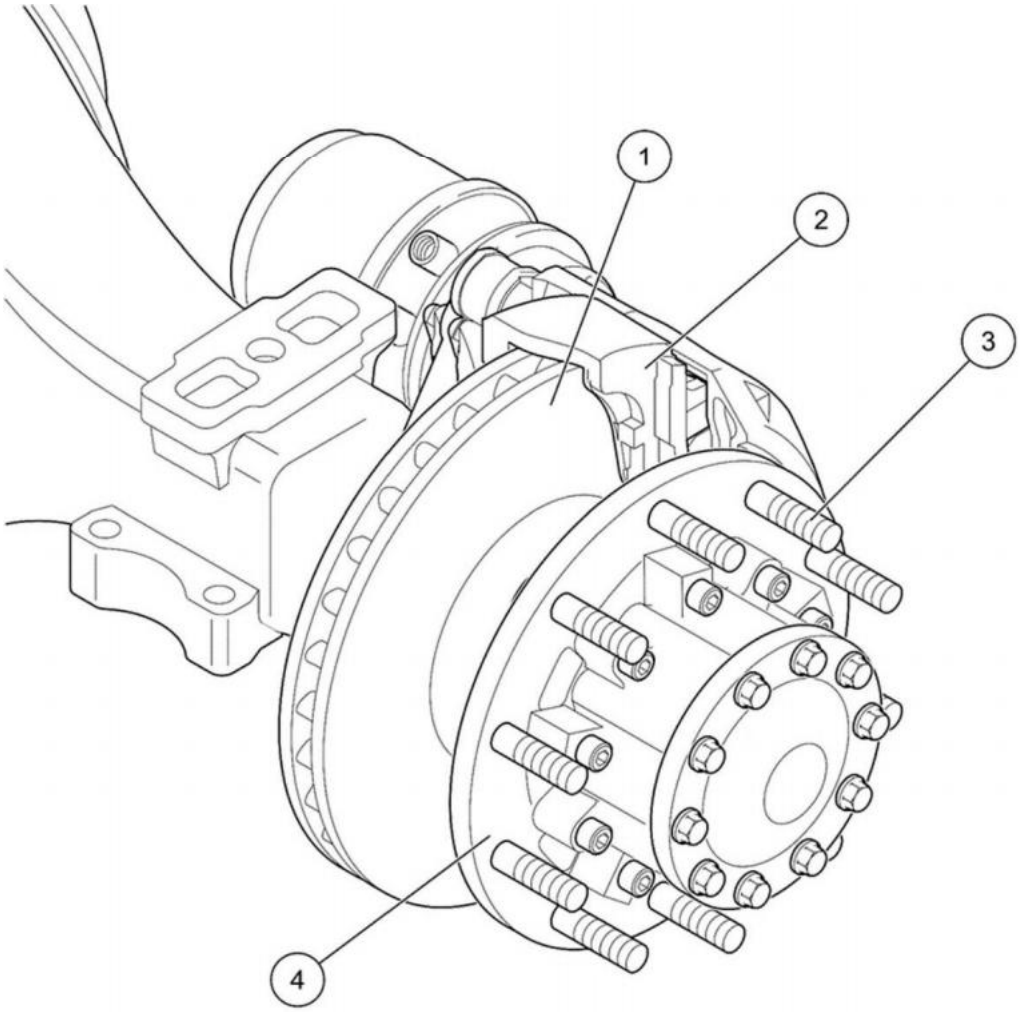

1. Brake disc 2. Disc brake 3. Wheel bolt 4. Wheel hub

Remove the pressure switch

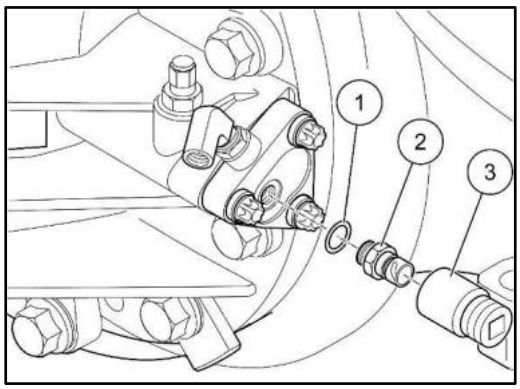

Removal steps

1. Use a 27mm sleeve to remove the pressure switch.
2. Remove the sealing washer.

Mesh the differential lock

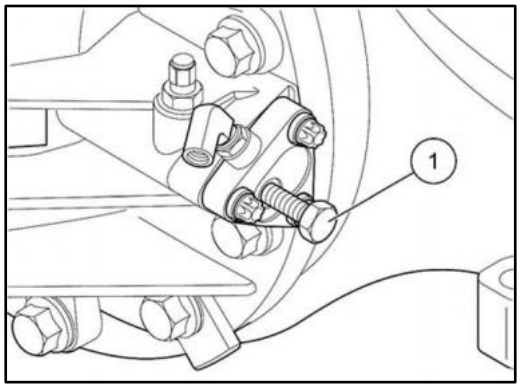

Removal steps

1. Use a 27mm sleeve to install the process bolt (M18*1.5) into the pressure switch thread, and rotate the wheel hub until the differential lock engages. The actuating torque of the process bolt ① is 35Nm.

Remove the half axle

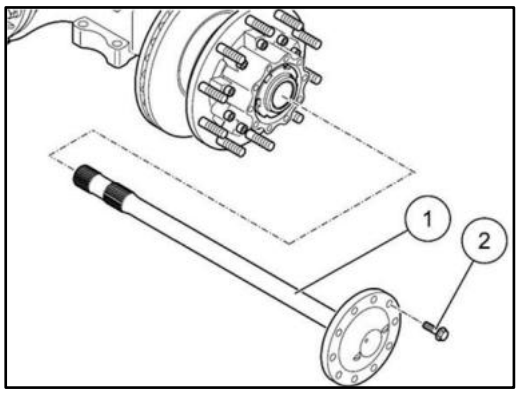

Removal steps

1. Use a 22mm sleeve to remove the half axle connecting bolt ② (M16*1.5*40) counterclockwise.
2. Extract the half axle ① from the axle housing chamber.

Remove the axle head locking nut

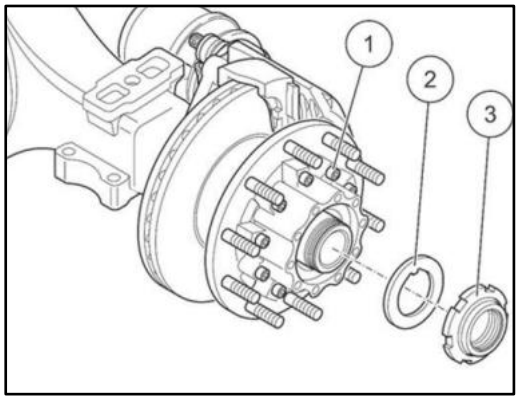

Removal steps

1. Restore the "concavity" on the axle head locking nut ③ using a chisel, then remove the axle head locking nut using a special socket tool (Q6802-10200).
2. Remove the thrust washer ②.

Remove the wheel hub

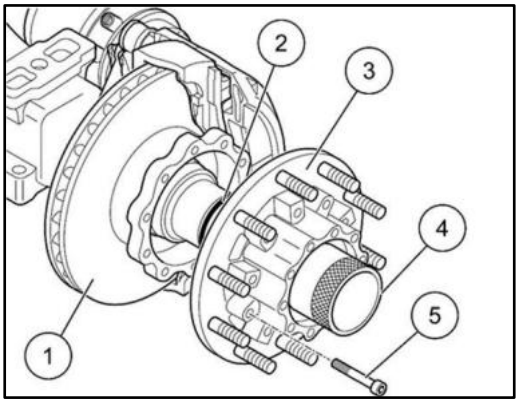

Removal steps

1. Use a 24mm sleeve to remove the connecting bolt (M16*1.5); separate the wheel hub from the brake disc.
2. Install the guide sleeve ④ into the thread of axle head locking nut, and pull out the wheel hub from the axle head with both hands.
3. Remove the wheel hub O-ring and wheel hub spacer ring.

Note: The O-ring is disposable, and should be replaced with a new one.

Install ABS bracket

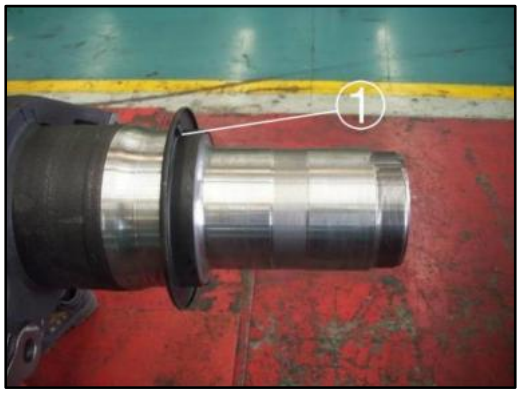

Installation steps

1. Apply 1/3 circle of holding adhesive at the matching position between the ABS bracket and the shaft shoulder.
2. Use a tooling to impact bracket onto the shaft shoulder; measure the distance between the ABS bracket and the shaft shoulder using a dial gauge, with a distance range of 0.2-0.35mm.

Auxiliary material: Loctite 680 holding adhesive

Note: When adding ABS wire, please distinguish it. The left wheel joint of the disc-type axle is gray white, while the right wheel joint is black; the drum type is the same on both sides.

Remove the guide sleeve



Installation steps

1. Install the guide sleeve into the thread of axle head locking nut.
2. Uniformly apply the high-efficiency grease to the contact surface between the axle head and the wheel hub bearing using a soft foam block.

Auxiliary materials: SKF LGAF 3E high-efficiency grease, soft foam block.

Note: No high-efficiency grease is applied to the location where the middle of bearing contact surface is 2cm away from the shaft shoulder.

Install the wheel hub O-ring



Installation steps

1. Install the wheel hub O-ring ② into bearing unit wheel hub inner seal groove ①.

Install the wheel hub

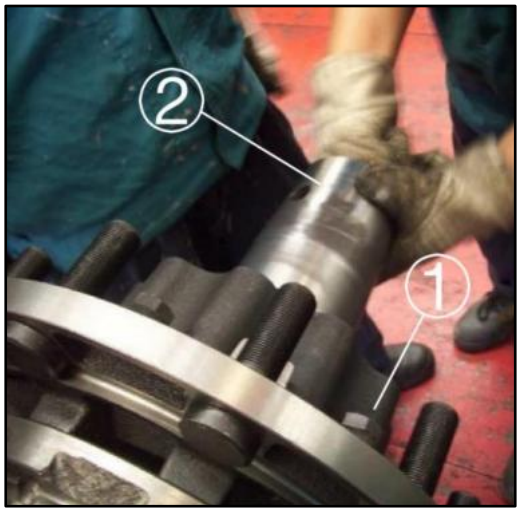

Installation steps

1. Lift the wheel hub and push it into the axle head through the guide sleeve.
2. Remove the guide sleeve; wipe off the oil fouling.

Note: Do not damage the ABS gear ring and the O-ring during the installation process.

Tighten the connecting bolt for brake disc



Installation steps

1. Apply threadlocker to the connecting bolt for brake disc ①.
2. Use a 24mm sleeve to symmetrically tighten the connecting bolt for brake disc (M16*1.5), with a torque range of 280 ± 30Nm and an actuating torque of 280Nm.

Auxiliary material: Loctite 271 threadlocker

Tighten the axle head locking nut

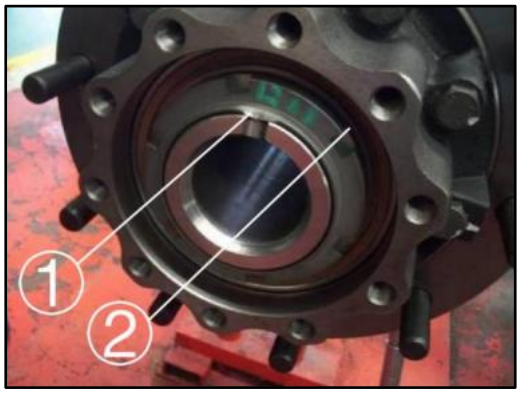

Installation steps

1. Install the thrust washer and the axle head locking nut on the axle head in sequence.
2. Use a special socket tool (Q6802-10200) to tighten the axle head locking nut, with a torque range of 1200 ± 100Nm and an actuating torque of 1200Nm (the same for the left and right wheels).
3. Knock the concavity of axle head locking nut at axle head notch, and ensure that there are no cracks at the locking point.

Note: ABS performance test: Rotate the wheel hub by hand for about 30 RPM, observe the instantaneous induced voltage value, with a range standard of ≥ 0.2V. If the measurement results do not meet the standards, adjust the distance between the ABS probe and the gear ring; or replace the ABS wire or gear ring.

Tighten the half axle bolt

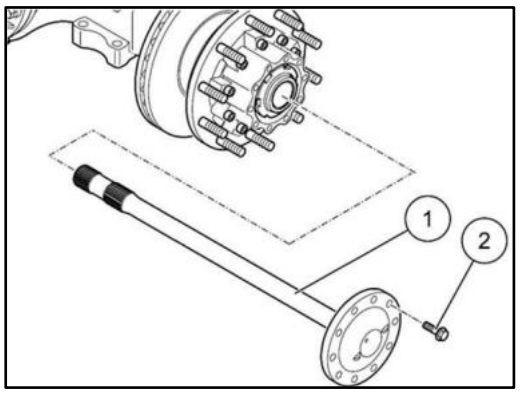

Installation steps

1. Apply threadlocker to the thread of the half axle bolt ②; apply flange sealant to the contact surface between the half axle ① and the wheel hub.
2. Install the half axle into the axle housing chamber; rotate the half axle left and right to mesh with the final drive half axle gear.
3. Install the half axle bolt (M16*1.5*40); use a 22mm sleeve to tighten it symmetrically, with a torque range of 360 ± 40Nm and an actuating torque of 360Nm.

Auxiliary material: Loctite 271 threadlocker, Loctite 1596 flange sealant

Spacer ring location diagram



Note: Before installing the half axle, confirm whether the axle head locking nut ① is locked, and whether the wheel hub spacer ring ② is installed in the matching position between the bearing unit and the half axle; if the wheel hub assembly needs to be replaced, pay attention to the matching between the spacer ring and the wheel hub. It is required that the distance between the bearing unit and the wheel hub end face after adding the spacer ring is ≤ 0.1mm.

Install the pressure switch

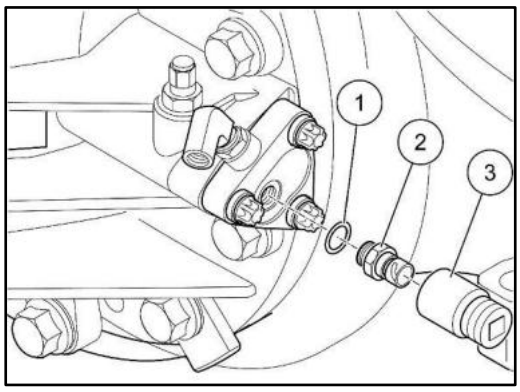

Installation steps

1. Use a 27mm sleeve to remove the (M18*1.5) bolt; install the sealing gasket pressure switch into the differential locking cylinder using a 27mm sleeve, and tighten it in sequence, with a torque range of 40 ± 5Nm and an actuating torque of 40Nm.

2. Connect the air circuit to test whether the differential lock can be disengaged freely; check if the On-Off signal of the pressure switch is normal.

Note: The smooth surface of the pressure switch sealing washer faces the pressure switch.

Disc brake

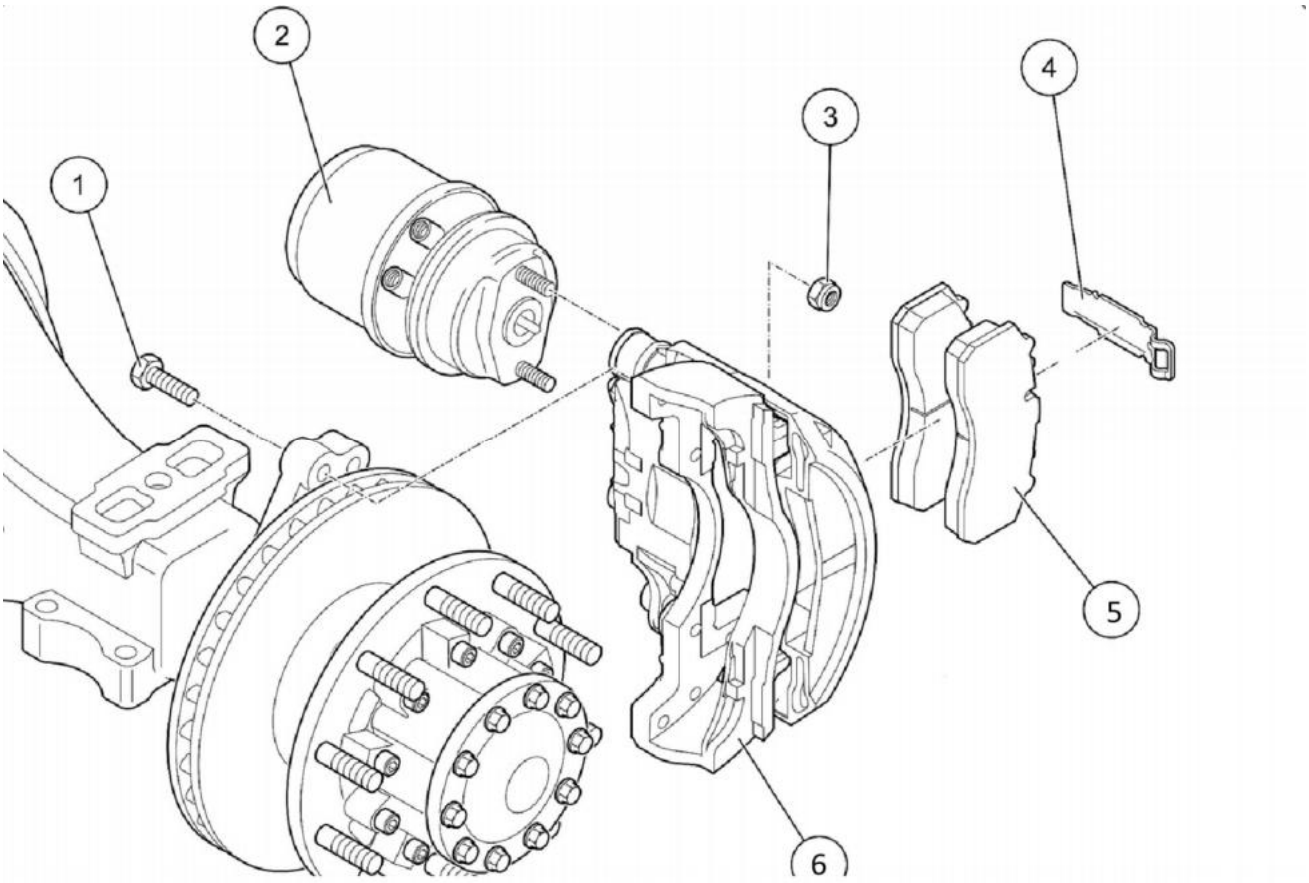

1. Brake connecting bolt 2 Air chamber 3. Brake chamber connecting nut 4. Pressing plate 5 Brake lining 6. Brake

Remove the pressing plate

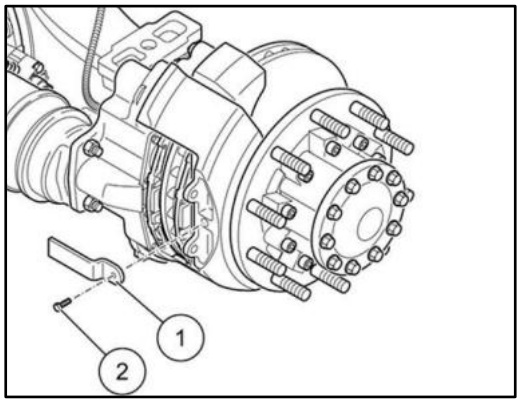

Removal steps

1. Remove the brake lining pressing plate bolt (M12*25) using an 18mm sleeve.
2. Remove the brake lining pressing plate.

Remove brake lining

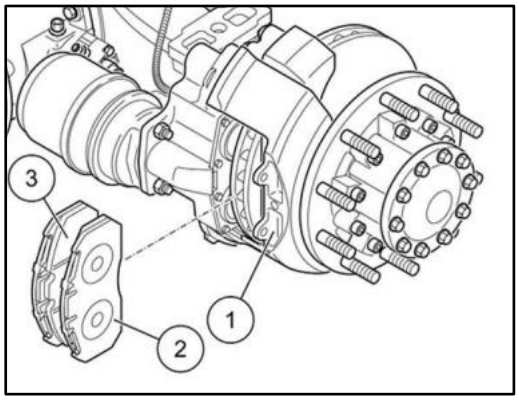

Removal steps

1. Take out the brake lining from the guide channel.
2. Check the wear of the brake lining.

Note: If it cannot be taken out, please adjust the manual adjusting shaft to enlarge the brake lining clearance.

Enlarge the brake lining clearance

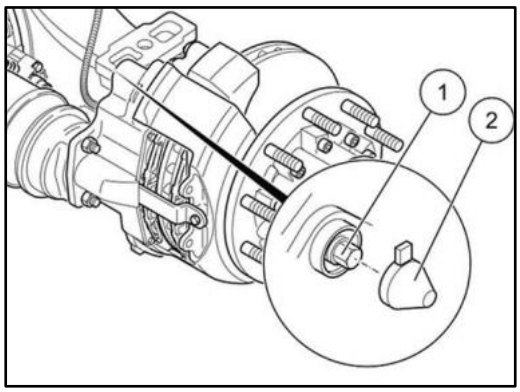

Operational steps

1. Open the protection cap ② by hand.
2. Rotate the manual adjusting shaft ① counterclockwise to enlarge the brake lining clearance.

Remove brake chamber

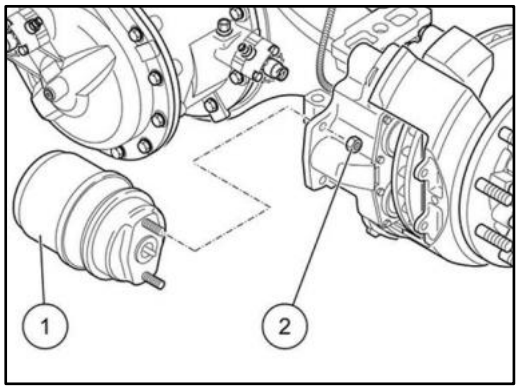

Removal steps

1. Use a 24mm sleeve to remove the brake chamber connecting nut.
2. Remove the brake chamber.

Remove the brake

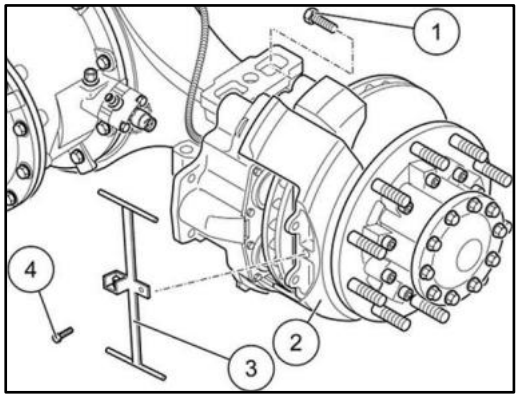

Removal steps

1. Install auxiliary tool ③ onto brake ② through connecting bolt ④.
2. Use a 30mm sleeve to remove the brake connecting bolt ① (M20*65).
3. Use auxiliary tool to lift down the brake ②.
4. Remove the auxiliary tool ③.

Remove brake disc

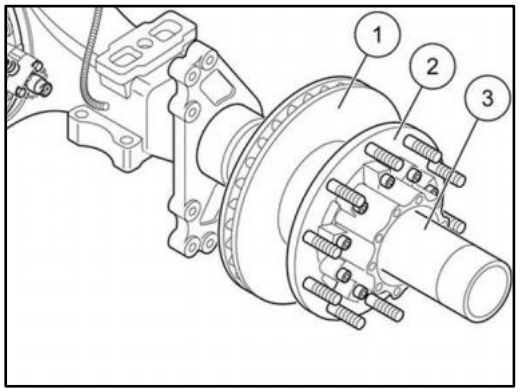

Removal steps

1. Remove the half axle bolt and half axle.
2. Check if the brake disc is severely worn.
3. Use a guide tube to remove the wheel hub and brake disc from the axle head.

Note: Disassemble and assemble the half axle and wheel hub according to *MCY13 Disc Brake Drive Axle - Wheel End*.

Remove brake disc

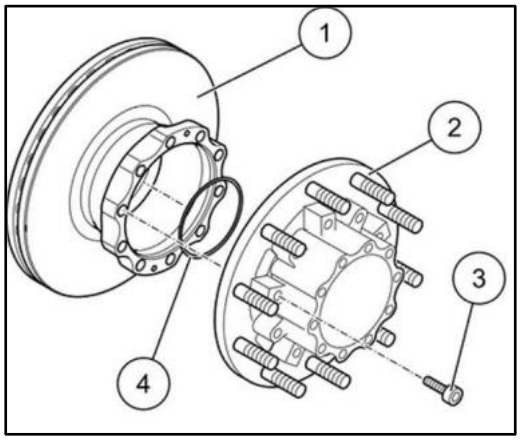

Removal steps

1. The brake disc can be removed separately from the wheel hub at the axle head, or you can remove the brake first and then remove them. Please refer to the instructions for disassembling/assembling the disc wheel end.
2. Use a 24mm sleeve to remove the wheel hub and connecting bolt for brake disc (M16*1.5) counterclockwise.

Install the brake disc

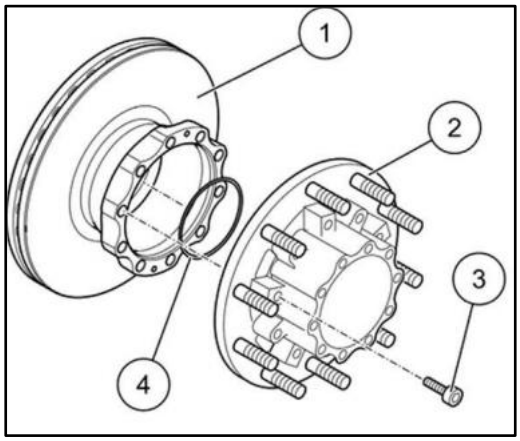

Installation steps

1. Install the O-ring into the bearing groove on the inside of the wheel hub.
2. Apply threadlocker to the connecting bolt for brake disc (M16*1.5).
3. Use a 24mm sleeve to tighten the connecting bolt, with a torque range of 280 ± 30Nm and an actuating torque of 280Nm.

Auxiliary material: Loctite 243 threadlocker

Note: The O-ring is disposable, and should be replaced with a new one.

Install the wheel hub and brake disc

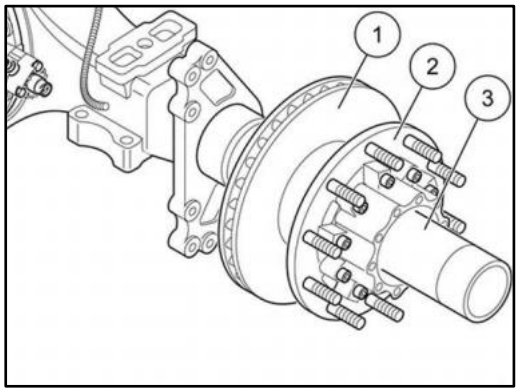

Installation steps

1. Apply installation plaster evenly to the axle head.
2. Install the wheel hub and brake disc onto the axle housing axle head through the guide tube.
3. Complete the installation of the wheel hub and half axle (same left and right wheels). The torque range of the large nut for shaft head is 1200 ± 100 Nm, and the torque range of the half axle bolt is 360 ± 40 Nm.

Auxiliary material: SKF LGAF 3E high-efficiency grease, Loctite 243 threadlocker, Loctite 1596 flange sealant

Note: The O-ring is disposable, and should be replaced with a new one.

Install the brake

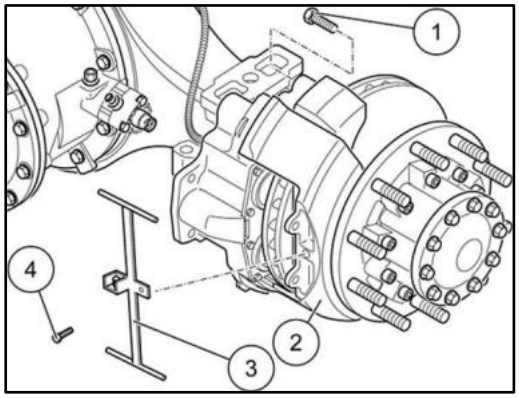

Installation steps

1. Install the auxiliary tool onto the brake through the connecting bolt; lift the brake onto the brake disc.
2. Apply threadlocker to the brake connecting bolt (M20*65); use a 30mm sleeve to symmetrically tighten the bolt, with a torque range of 568 ± 28Nm and an actuating torque of 560Nm.
3. Remove the auxiliary tool.

Auxiliary material: Loctite 271 threadlocker

Tightening order

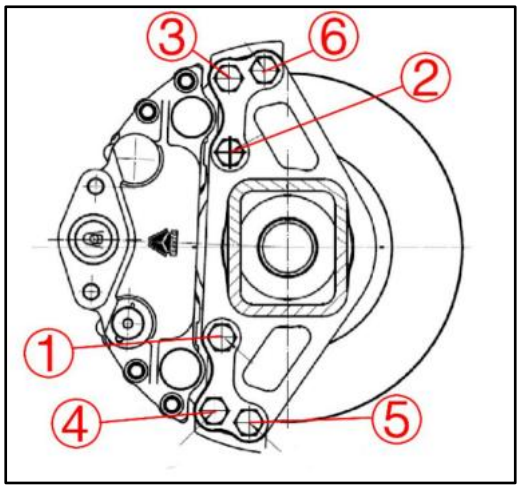

Operational steps

Note: Tighten the components in the order of ①, ②, ③, ④, ⑤, ⑥.

Apply anti-seize agent

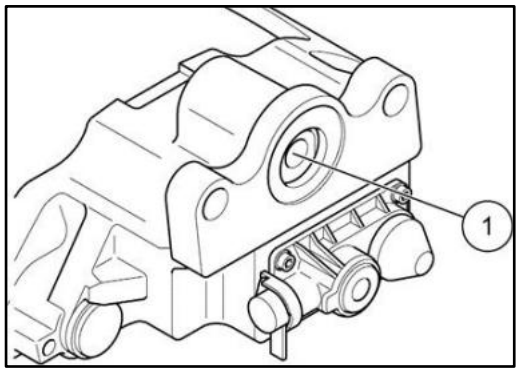

Operational steps

1. Remove the protection on the brake range rod hole.
2. Apply an appropriate amount of lubricant on the range rod.

Auxiliary material: HR 46-361 S lubricant

Note: Brake inner cavity should be kept clean.

Install brake chamber

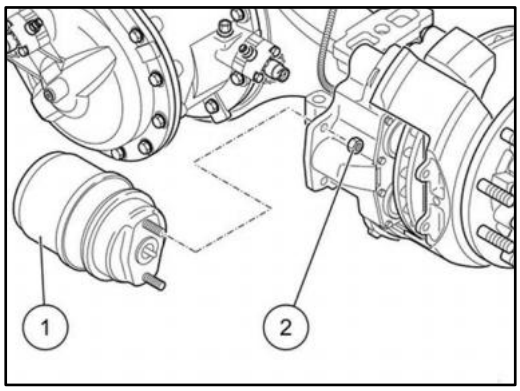

Installation steps

1. Install the brake chamber ① onto the brake along the indicated route.
2. Apply an appropriate amount of threadlocker to the air chamber screw rod.
3. Install the spring washer and nut ② onto the air chamber screw rod in sequence, tighten the nut using a 24mm sleeve, with a torque range of 200 ± 10Nm and an actuating torque of 200Nm.

Auxiliary material: Loctite 243 threadlocker

Note: With 6880/6881 air chamber ventilation hole facing upwards and away from the axle housing side; 6883/6884 air chamber ventilation hole facing upwards and leaning towards the axle housing.

Install the brake lining

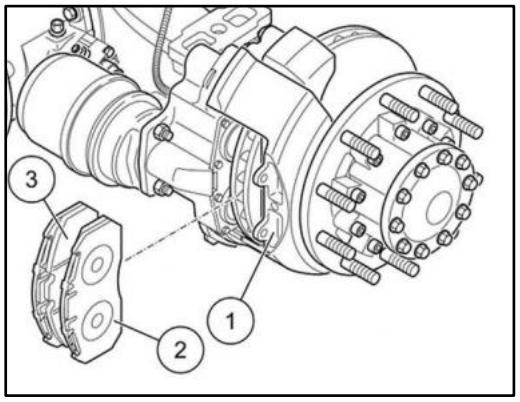

Installation steps

1. Install the brake lining onto the brake along the indicated route.

Install the pressing plate

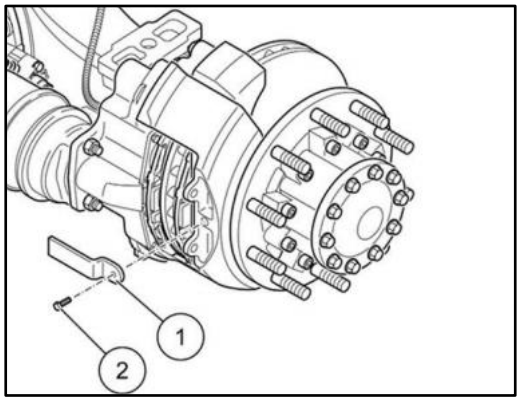

Installation steps

1. Apply threadlocker to the bolt. Thread the bolt through the brake lining pressing plate, and install it onto the brake following the indicated route.
2. Tighten the bolt using an 18mm sleeve, with a torque range of 40±5Nm and an actuating torque of 40Nm.

Auxiliary material: Loctite 243 threadlocker

Adjustment of brake clearance

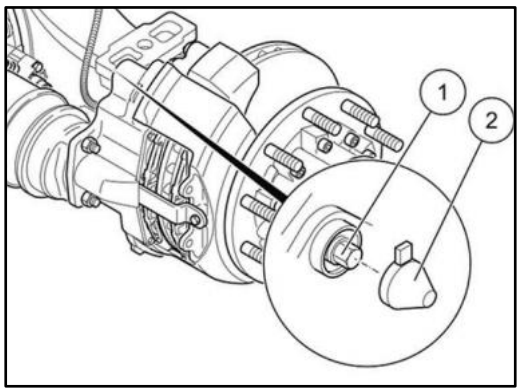

Operational steps

1. Push the caliper body inward by hand to concentrate the brake clearance to the inside.
2. Open the protection cap and adjust the manual adjusting shaft using a tooling (clockwise to decrease the brake clearance; counterclockwise to increase the brake clearance).
3. Choose the feeler leaf with appropriate thickness and insert it between the brake lining and the brake disc. Measure the initial brake clearance. If the clearance is too large or too small, adjust the manual adjusting shaft. until the initial clearance is within the acceptable range of 1.7-2.3mm.
4. Cover the protection cap to ensure cleanliness inside the brake.

Note: When adjusting, start by increasing the initial clearance to prevent the manual adjusting shaft from getting stuck at the extreme position.

Remove brake lining

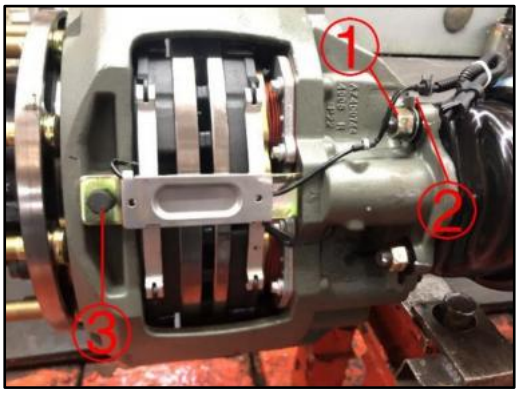

Removal steps

1. Remove the internal and external connectors of the alarm wiring harness; loosen the air chamber connecting nut ① using a 24mm sleeve, remove the alarm wiring harness end clamp ②, elastic pad, and the connecting nut.
2. Loosen the brake lining pressing plate nut ③ using an 18mm sleeve, and pull out the brake lining along with the inner line of the wear alarm from the brake caliper.

Remove alarm wiring harness

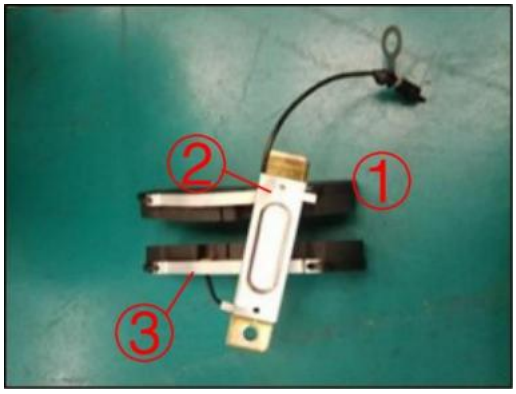

Removal steps

1. Remove the brake lining pressing plate ① from the wear alarm cover plate ②. Remove the brake lining spring leaf ③ and remove the inner wire head of the wear alarm from the brake lining fixing groove.

Install alarm wiring harness



Installation steps

1. Install the new friction wear alarm inner wire head ① into the brake lining fixing groove ②, and reset the brake lining spring leaf. Insert the brake lining pressing plate into the wear alarm cover plate.

Install the brake lining

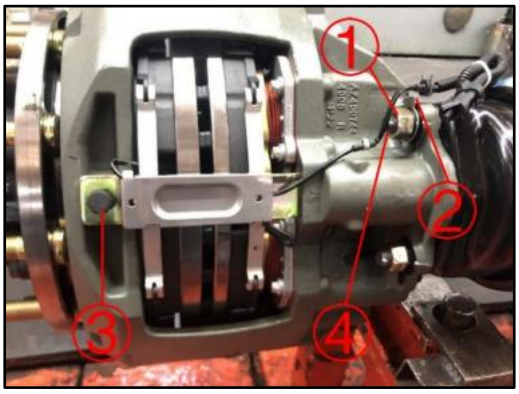

Installation steps

1. Insert the assembled brake lining into the brake caliper. Apply threadlocker to the pressing plate bolt ③. Thread the brake lining pressing plate bolt (M12*25) through the pressing plate and tighten it into the thread of the brake using an 18mm sleeve, with a torque range of 40±5Nm and an actuating torque of 40Nm.
2. Apply threadlocker to the brake chamber screw rod ④. Thread the alarm wiring harness end clamp ② through the brake chamber screw rod and connect the inner and outer wire connectors. Install the elastic pad and the connecting nut ②. Tighten the air chamber connecting nut ① using a 24mm sleeve, with a torque range of 200 ± 10Nm and an actuating torque of 200Nm .

Auxiliary material: Loctite 243 threadlocker

Note: After replacing the brake lining, it is necessary to re-measure the initial clearance, with an actuating clearance of 1.7-2.3mm. Refer to disc brake clearance adjustment steps.

Others

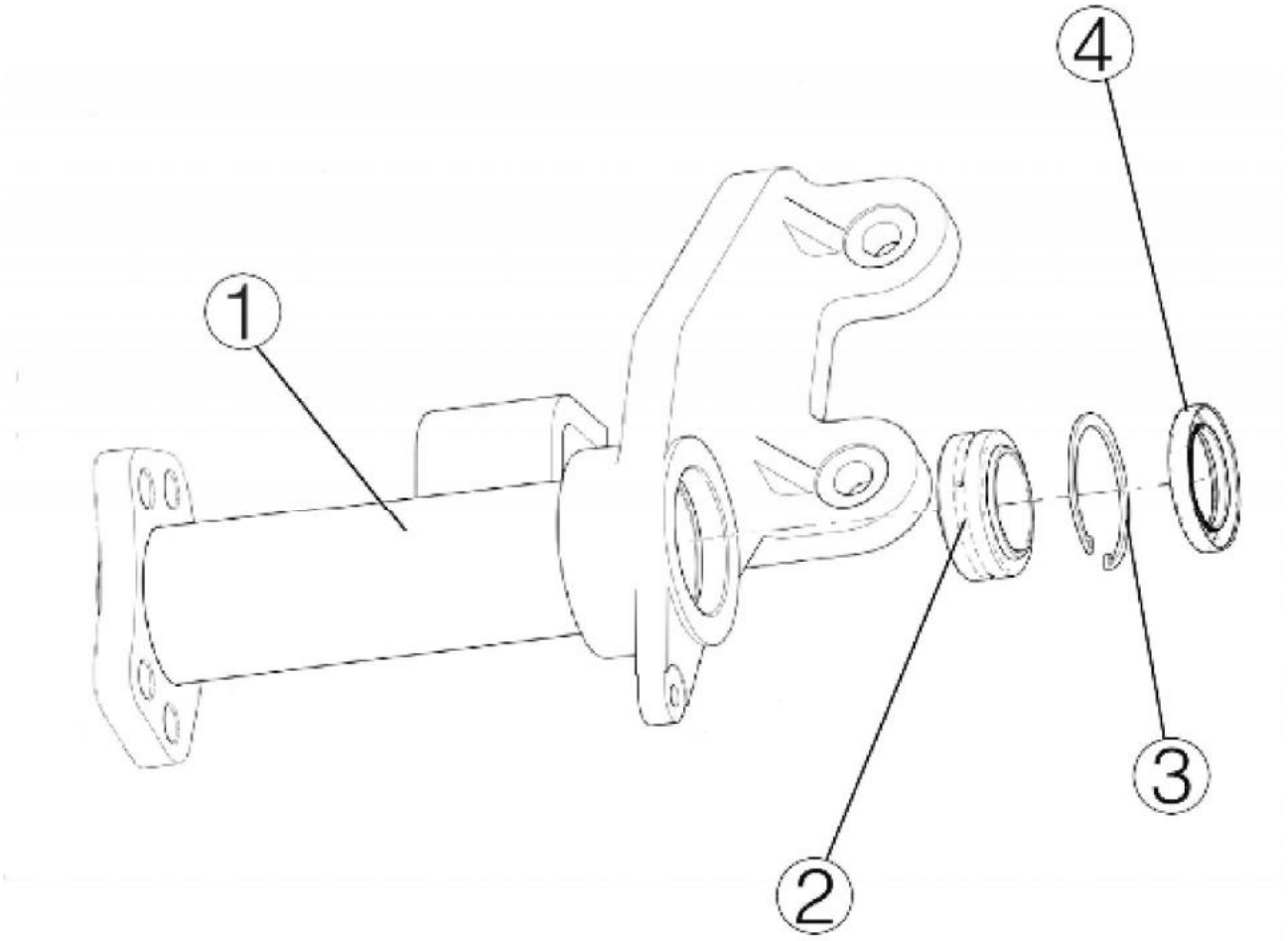

1. Air chamber bracket 2. Joint bearing 3. Internal circlip 4. Oil seal

Remove the L-shaped support plate

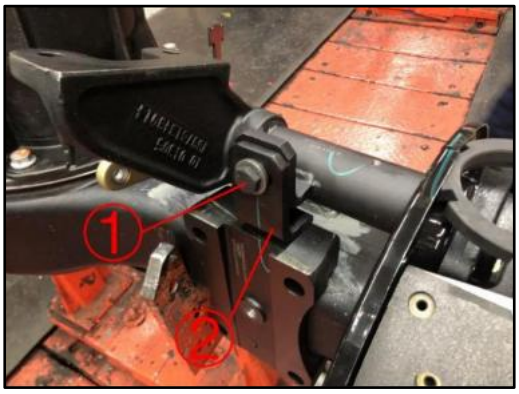

Removal steps

1. Use a 24mm sleeve to remove the connecting bolt ① (M16*1.5) and remove the L-shaped support plate ②.

Note: If the L-shaped support plate has been welded, the welding points need to be polished using an angle grinder.

Install the L-shaped support plate

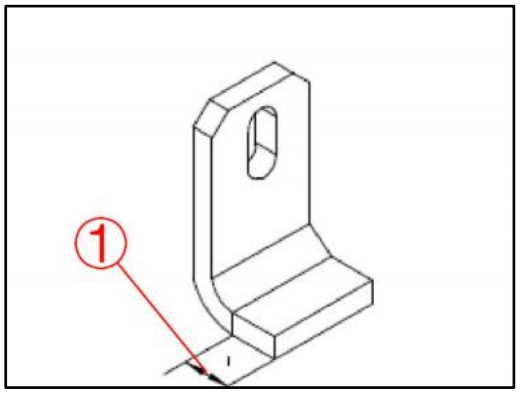

Installation steps

1. Apply threadlocker to the bolt (M16*1.5); connect the L-shaped support plate to the brake chamber sleeving, and tighten the connecting bolt using a 24mm sleeve, with a torque range of 295-310Nm.
2. Weld the L-shaped support plate, and weld area ①, with a weld seam height of ≈ 10mm.
Auxiliary material: Loctite 271 threadlocker

Remove the internal filter



Removal steps

1. Use a 13mm sleeve to remove the hexagon bolt with flange ① (M 8*10); remove the oil/fuel filter ②.

Install the internal filter

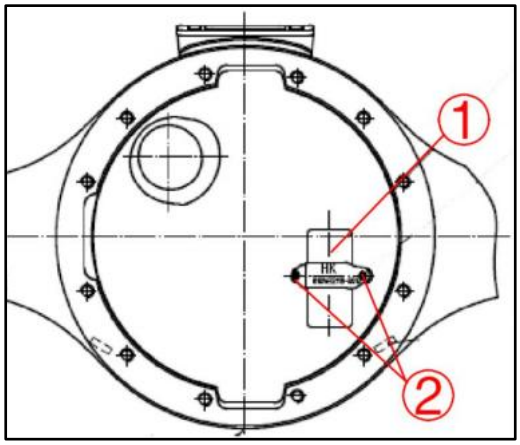

Installation steps

1. Thread the hexagon bolt with flange ② (M 8*10) through the oil/fuel filter ①, and connect it to the axle housing thread. Use a 13mm sleeve to tighten the bolt, with a torque range of 22 ± 3Nm.

Note: The large hole of the oil/fuel filter faces the axle housing oil drain plug.

Remove the air chamber bracket bolt



Removal steps

1. Use a 19mm sleeve to remove the air chamber bracket connecting bolt ①; remove the bolt and gasket.

Install the air chamber bracket bolt

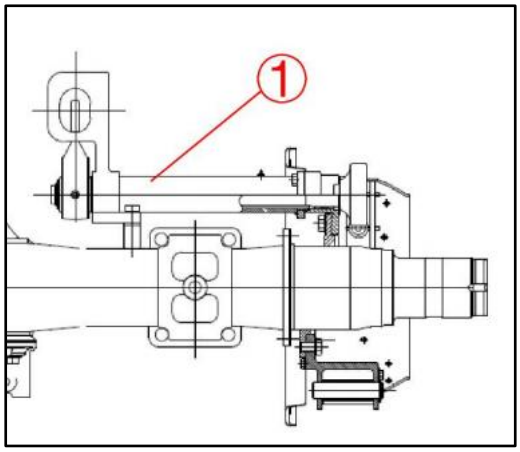

Installation steps

1. Apply threadlocker to bolt ①; insert the gasket into the bolt, thread it through the air chamber bracket, and screw it into the axle housing thread.

2. Use a 19mm sleeve to tighten the air chamber bracket connecting bolt, with a torque range of 146-178Nm and an actuating torque of 170Nm.

Auxiliary material: Threadlocker

Note: After tightening the connecting bolt, please manually pull the brake adjusting arm to check the flexibility of the adjusting arm brake; if the adjusting arm brake is stuck, additional adjusting shims need to be added.

Remove the external oil filter

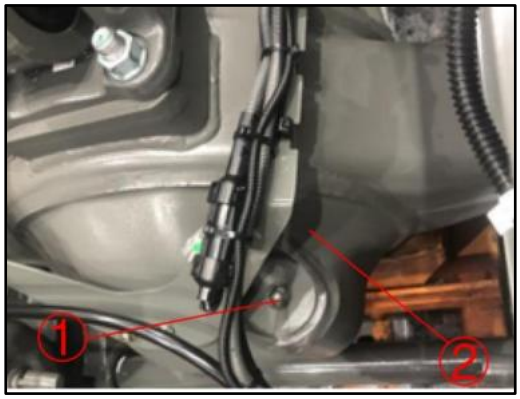

Removal steps

1. Use a 21mm hexagon socket to remove the external oil filter ①, and remove it from the axle housing ②.

Install the external oil filter

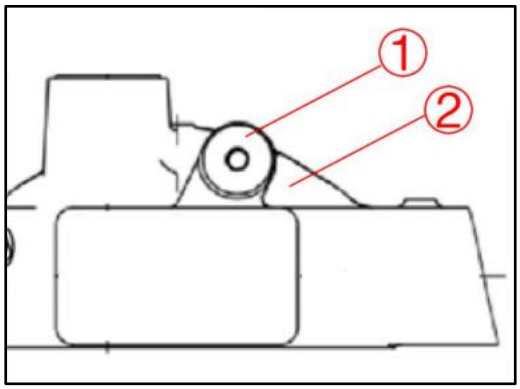

Installation steps

1. Install the external oil filter ① into axle housing ② mounting hole, and manually screw it by 2-3 threads; use a 21mm hexagon socket to tighten it, with a torque range of 50 ± 10Nm and an actuating torque of 50Nm.

Remove the joint bearing

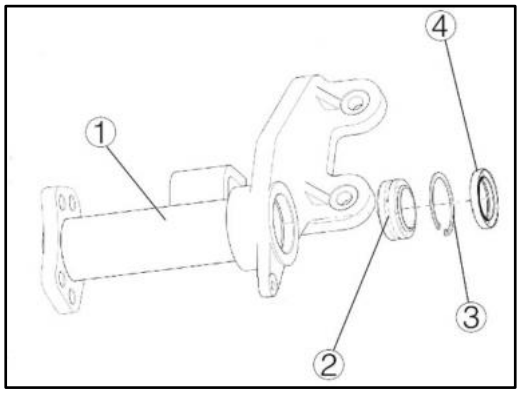

Removal steps

1. Use a tool to remove the oil seal ④ from the air chamber bracket ①; use circlip pliers to remove the internal circlip ③ from the air chamber bracket ①; use a dismantling tool to remove the joint bearing ② from the air chamber bracket ①.

Install the joint bearing

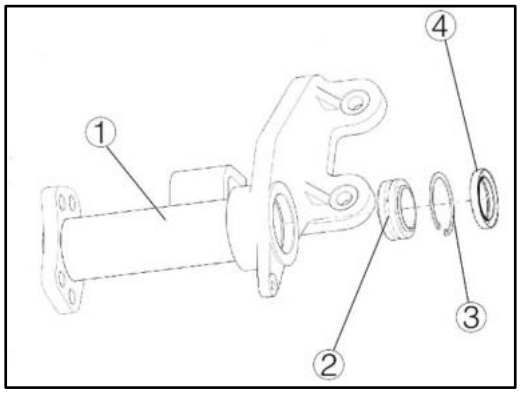

Installation steps

1. Use a pressure head to press the joint bearing ② into the air chamber bracket ① mounting hole, and check whether the joint bearing rotates flexibly; use circlip pliers to install the internal circlip ③ into the air chamber bracket circlip groove; apply grease to the oil seal ④ lip, and install it into the air chamber bracket mounting hole using a tooling.

Auxiliary material: 2# general automotive lithium grease

Note: The flat side of the oil seal frame faces the joint bearing.